HAL
open science

In-Situ Survey System of Resistive and Thermoelectric Properties of Either Pure or Mixed Materials in Thin Films Evaporated Under Ultra High Vacuum

L. Lechevallier, J.-Y. Le Huerou, G. Richon, J.-M. Sarrau, J. Gouault

▶ **To cite this version:**

L. Lechevallier, J.-Y. Le Huerou, G. Richon, J.-M. Sarrau, J. Gouault. In-Situ Survey System of Resistive and Thermoelectric Properties of Either Pure or Mixed Materials in Thin Films Evaporated Under Ultra High Vacuum. Journal de Physique III, 1995, 5 (4), pp.409-418. ⟨10.1051/jp3:1995136⟩. ⟨jpa-00249319⟩

HAL Id: jpa-00249319

https://hal.science/jpa-00249319v1

Submitted on 4 Feb 2008

HAL is a multi-disciplinary open access archive for the deposit and dissemination of scientific research documents, whether they are published or not. The documents may come from teaching and research institutions in France or abroad, or from public or private research centers.

L'archive ouverte pluridisciplinaire **HAL**, est destinée au dépôt et à la diffusion de documents scientifiques de niveau recherche, publiés ou non, émanant des établissements d'enseignement et de recherche français ou étrangers, des laboratoires publics ou privés.

Autorisation HAL

HAL Authorization

J. Phys. III France **5** (1995) 409–418

Classification
Physics Abstracts
07.20D — 73.60 — 81.15G

In-Situ Survey System of Resistive and Thermoelectric Properties of Either Pure or Mixed Materials in Thin Films Evaporated Under Ultra High Vacuum

L. Lechevallier([1]), J.-Y. Le Huerou([1]), G. Richon([2]), J.-M. Sarrau([3]) and J. Gouault([2])

([1]) I.U.P. Génie Electrique, Université de Cergy-Pontoise, 8 le Campus, 95033 Cergy-Pontoise, France
([2]) LACIS, ([3]) LMI URA CNRS 808 Faculté des Sciences et des Techniques, Université de Rouen BP 118, Place Emile Blondel, 76134 Mont Saint Aignan Cedex, France

(Received 28 April 1993, revised 31 March 1994 and 2 November 1994, accepted 19 January 1995)

Résumé. — L'étude des comportements résistif et thermoélectrique *in situ* en fonction de la température de couches minces de matériaux simples ou composites obtenus en milieu raréfié s'avère intéressante en vue d'applications comme jauge de contrainte ou résistance superficielle mais particulièrement délicate lorsque les mesures donnent naissance à des signaux électriques de très faible amplitude. Ces derniers deviennent en effet difficilement décelables en raison des perturbations apportées par l'environnement expérimental Le système qui est décrit ici permet de mesurer des résistances avec une incertitude relative de 2×10^{-4} et d'apprécier des variations de résistance de 2 mΩ et des f.e.m. thermoélectriques de l'ordre de 2 μV. Les couches étudiées au laboratoire présentent généralement des résistances inférieures à 100 Ω et des variations de résistance dues aux variations de température de l'ordre de quelques Ω. Le dispositif de mesure présente donc des caractéristiques techniques suffisantes pour nos études. Connecté à un PC il permet l'acquisition des données et un traitement rapide.

Abstract. — The study of thermoelectric and resistive *in situ* behaviours depending on temperature for thin films of either pure or composite materials obtained under ultra-high vacuum, is very interesting, since they can be used as strain gauges or superficial resistances. However, studies become particularly difficult when the measurements generate very low-level electrical signals. Indeed, these turn out to be hardly detectable because of the perturbations brought by the experimental environment. The apparatus described below allows for the measurement of resistance with a relative uncertainty of 2×10^{-4}, resistance variation with an absolute uncertainty of 2 mΩ and thermoelectric e.m.f. of about 2 μV. Films studied in the laboratory generally exhibit resistances lower than 100 Ω and resistance variations due to temperature variations of about a few ohms. So this device has sufficient technical characteristics for our studies. It can be connected to a PC, which allows for easy data collection and treatment.

© Les Editions de Physique 1995

1. Introduction

In the bulk state, some binary alloys have high values of resistivity and thermoelectric power and low values of temperature coefficient of resistance (TCR). Consequently, it can be interesting to prepare thin films of those alloys in order to study their electrical properties. The advantage of miniaturisation can allow the use of such films as strain gauges, surface resistors and thermocouples.

Thin films of binary alloys are prepared in ultra-high vacuum by a controlled coevaporation process and studied *in situ*. For that, the obtained film is in contact through the ultra-high vacuum enclosure with a measurement apparatus described below, which allows for the determination of the temperature and the resistance of the layer, and Seebeck effect e.m.f. of the material/reference metal couple.

2. Measurement Principles

2.1. Experimental study device (Fig. 1) [2]. — The thin film (length: 20 mm, width: 1 mm, thickness: from 10 to 400 nm) is deposited onto a silica slide (length: 80 mm, width: 20 mm, thickness: 2 mm) between two gold and nickel thermocouple electrodes, previously deposited, in contact with the layer extremities, which allows us to determine their temperature. So two kinds of circuits are obtained:

- The material/gold circuit on one hand: this will be used to study the resistive behaviour when the layer is submitted to a uniform temperature, and to study the thermoelectric behaviour when the layer is submitted to a temperature gradient.

- The nickel/gold thermocouple circuits: they are calibrated to be used for the measurement of the T_C and T_H temperatures of the A_C and A_H layer extremities [18].

2.2. Types of measurements. — As the resistance measurement made with a direct current involves direct voltage shifts due to unwanted thermoelectric e.m.f. (studied previously [1]), our apparatus uses the following types of experimental measurements [3].

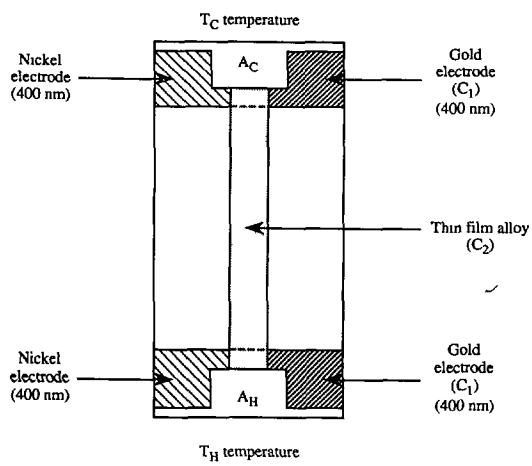

Fig. 1. — Experimental set-up.

- On the one hand, sinusoidal voltage measurements due to a sinusoidal current generator producing a $i(f)$ sinusoidal current (constant as an RMS value), circulating in a R_i calibrated resistance serially connected with the R_x resistance of the studied layer.

- On the other hand, direct voltages due to the e.m.f. generated by the Seebeck effect in the studied alloy/gold thermocouple and in the nickel/gold thermocouples (thin films and connection wires).

2.3. Resistance measurement (Fig. 2). — For the resistance measurement, a pseudo four-wire method is used. We can consider that the very small resistivity (gold) and the high thickness (more than 450 nm) of the gauges in relationship with the thin film alloys characteristics involves that the resistance variations cannot be ascribed to the gauges.

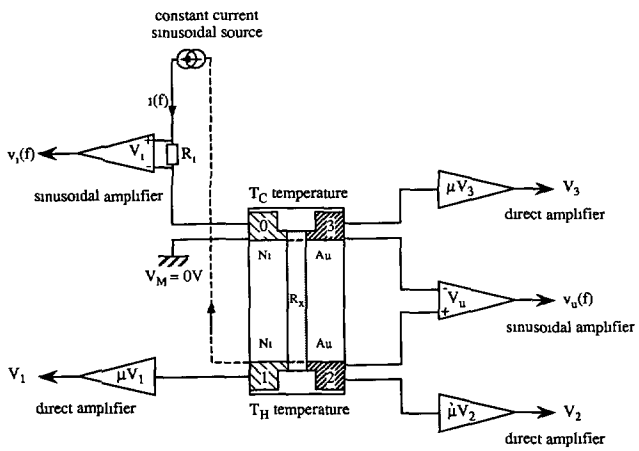

Fig. 2. — General measurement rules.

The whole resistive layer and the two associated thermocouples form a system of small dimension. To measure the voltages as accurately as possible, one extremity of the resistance layer has been chosen as a ground reference. Moreover, the more accurate the measurement, the more closely its value will approach that of a R_i standard.

To achieve these conditions, the same constant current $i(f)$ circulates in both the R_i standard resistance and the resistance R_x to be measured. Knowing R_i, we have to evaluate v_i (R_i voltage) and v_u (R_x voltage): $R_x = R_i.v_u/v_i$.

2.4. Thermoelectric power measurement (Fig. 3). — When one conductor (C_2) (here the studied material) is placed between two parts of another conductor (C_1) (here gold), considering that the extremities D_H and D_C are at the same temperature T_1, and that T_H is different from T_C, a voltage $V_{D_H} - V_{D_C}$ appears in an open circuit; this voltage is equal to the Seebeck effect e.m.f. $e(2/1)$ generated in the thermocouple C_2/C_1 which behaves as a generator.

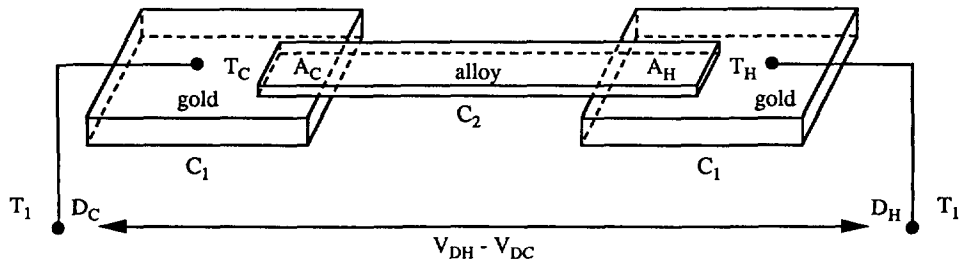

Fig. 3. — Thermoelectric chain.

The $e(2/1)$ e.m.f. and the $\alpha(2/1)$ relative thermoelectric power of the C_2 conductor in relation to the C_1 conductor for the T temperature are given by the following relation:

$$\nu_{D_C} - \nu_{D_H} = e(2/1) = \int_{T_H}^{T_C} - \alpha(2/1)\mathrm{d}T$$

The relative thermoelectric power value can be found from the experimental curve $e(2/1) = f(T_H)$, determining the derived function $\mathrm{d}(e(2/1))/\mathrm{d}T_H = \alpha(2/1)$ at the T_H temperature, with T_C remaining constant.

The $V_{D_H} - V_{D_C}$ voltage equal to the $e(2/1)$ e.m.f. is obtained from the $V_3 - V_2$ direct voltage (Fig. 2).

2.5. T_H AND T_C TEMPERATURE MEASUREMENTS (FIG. 2). — The T_H and T_C temperatures of the A_H and A_C junctions are obtained from the $V_2 - V_1$ and $V_3 - V_M$ direct voltages, which are proportional to the e.m.f. generated in the Au/Ni thermocouples (a cold solder compensation being achieved with an appropriate software). The isotherm block temperature where the connections are made is measured from a temperature gauge. Thus the value of the correction to be brought can be estimated by a calculator which has the values corresponding to the thermocouples used in memory.

3. Experimental Set-Up (Fig. 4) [3]

3.1. RESISTANCE MEASUREMENT [4–7]. — To avoid modifications of the v_i voltage value, it is controlled by a follower amplifier which has a gain equal to 1 and a high input impedance.

However, in order to separate the direct from the sinusoidal signals, a high pass filter is introduced at the input (R_1C_1 cell with R_1 being much higher than R_i).

A second stage is achieved from a 1.095 gain amplifier which is controlled to give a straight one-volt correspondence to a one-mA current circulating in the layer.

The v_u voltage not being referenced to the ground, two high-impedance followers are placed before a differential amplifier whose gain is fixed to the 1.095 value (with high precision resistances, +0.01%), to be equal to the preceding chain gain.

The v_i and v_u signals are respectively applied to a pass band filter which is centred on the 1370 Hz frequency, that of the sinusoidal current generator. This active filter is selective with a gain value of one at the central frequency (1370 Hz), and a third-order attenuation. Consequently, the high-frequency noises and the low-frequency potential interference, which may occur from the mains and its harmonics are eliminated .

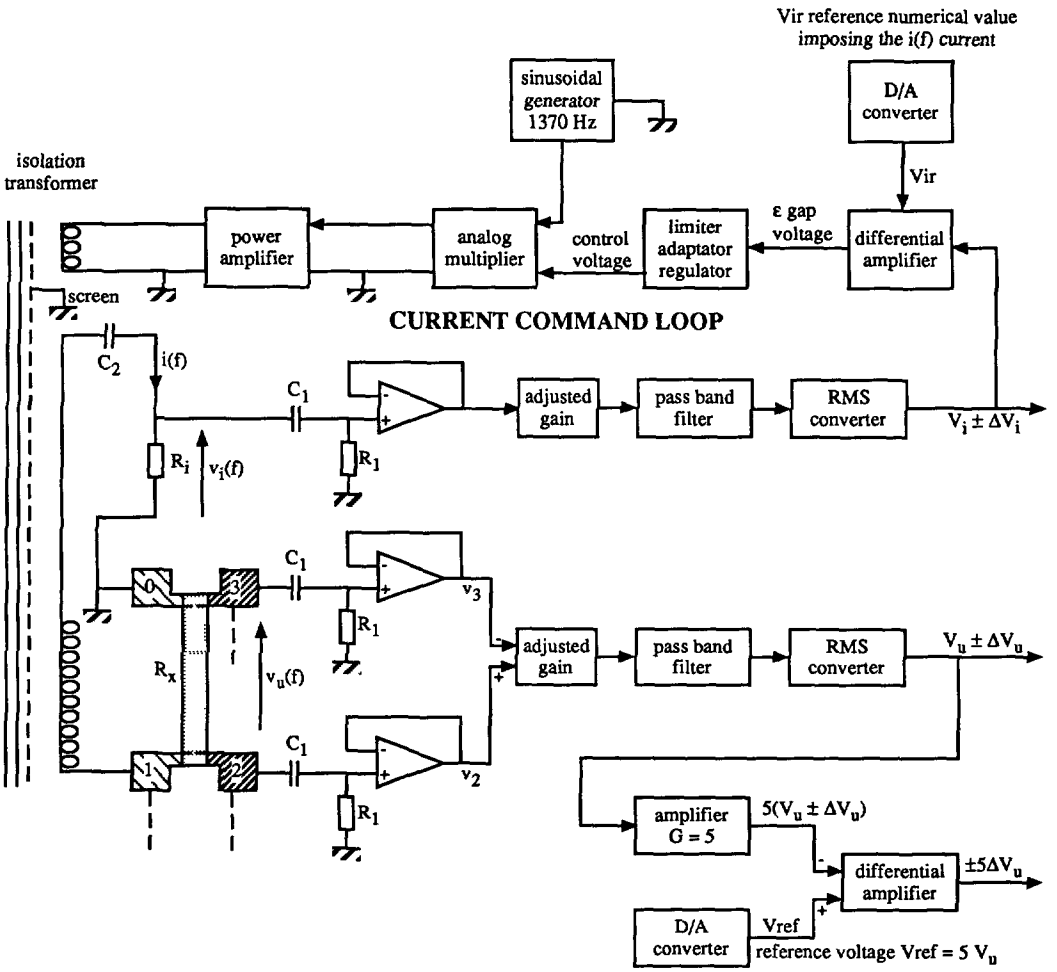

Fig. 4. — Architecture of the measurement system.

The v_i and v_u voltages are then converted into direct voltages with RMS converters. Thus, we obtain two direct voltages V_i and V_u, which characterize the RMS values of v_i and v_u signals, respectively.

3.2. ΔR_x FROM R_x RESISTANCE VARIATION MEASUREMENTS [8, 9]. — To increase the sensitivity, the V_u voltage is first amplified by a five-factor ratio, then compared to a reference voltage V_{ref} with the help of a subtractor.

The difference between these two voltages gives a gap proportional to the resistance variation, so that: $\Delta R_x = [5\Delta V_u]R_i/(5V_i)$; $[5\Delta V_u]$ the read value.

The reference voltage V_{ref} is obtained from a twelve-bit 2.5 mV resolution D/A converter.

3.3. HOW TO GENERATE THE MEASUREMENT SINUSOIDAL CURRENT [10–12]. — To ensure the accuracy of the measurements that need the very low variations of the R_x resistance, the $i(f)$ sinusoidal current has to remain constant in amplitude and in frequency throughout the thermal evolution cycle of the studied layers.

The sinusoidal signal is obtained from a function generator followed by a high-input impedance amplifier. The output value of the sinusoid rises about 20 V peak to peak.

In order to keep the current amplitude as constant as possible, the generated voltage is introduced into a regulated controlled loop through an analog multiplier [13]. This creates a sinusoidal output voltage, which is the result of multiplying the input voltage by a direct control voltage that can vary from 0 to 10 V.

In order to minimize the noise, the output voltage of the multiplier is rather high (20 V peak to peak). It is then softened to obtain an accurate 1 V correspondence for 1 mA in the layer.

It then goes to a power amplifier to allow for the connection with the primary stage of an isolation transformer, the secondary stage being connected to the layer.

The V_i voltage from the RMS converter is introduced into a subtractor that receives on its other input the accurate V_{ir} voltage from a twelve-bit D/A converter [14].

From the subtractor output we get the gap voltage ε that drives the current regulation in the layer. The gap detector designed from an amplifier is followed by a regulator, adaptor and limiter stage. Its aim is to generate a limited and adapted control voltage allowing an adequate connection to the multiplier.

The aim of the regulator is to correct properly the phase of the gap signal in the regulated loop. The adaptor is used to place the functional point at the accurate voltage. An active limiter with a variable threshold protects the multiplier.

3.4. THERMOELECTRIC E.M.F. MEASUREMENTS (FIG. 2) [15]. — The main difficulty of these e.m.f. measurements lies in the amplification of very low levels with interference from the numerous parasites generated by the system. The classical amplifiers give insoluble problems, the difficulty has been avoided by building amplifiers using the chopping technique.

An integration or filtering stage puts a direct signal out, theoretically independent of the interference voltages that may have an effect on the e.m.f.

The three micro voltmeters (μV_i) that provide the thermoelectric e.m.f. have been built according to this principle, with a chopper-stabilized amplifier-like component.

4. Experimental Results [16, 17]

4.1. R_x RESISTANCE MEASUREMENTS. — We have made measurements of different bulk resistances, previously measured with an ohmic meter.

RMS value currents from 0.1 to 10 mA have been applied to these resistances, which involved an adjustment of selective amplifications of V_u and V_i.

Optimal values of these different measurements have been determined for resistances from 20 to 1000 Ω.

Absolute resolutions are presented in Table I for four resistance values.

We can observe that the absolute uncertainty obtained during the measurement decreases while the resistance increases, though the relative value $\Delta R_x/R_x$ remains about 2×10^{-4} This last value is linked with the resolution of the D/A converters used for the acquisition of the analog voltages V_u and V_i.

Indeed, the latter being of ±1 point for 20000 points, the relative value on the R_x accuracy is given by: $(\Delta R_x/R_x) = (\Delta V_u/V_u) + (\Delta V_i/V_i) = 10^{-4}$ (R_x being equal to $R_i V_u/V_i$).

The relative value on the R_x accuracy is also due to the accuracy obtained on the adjusted gain amplification values of the two measurement chains, the following amplifiers having a gain equal to one. The high accuracy of the used resistances (0.01%) for this stage, and the possibility to control the gain of every chain allows us to consider that the analog error is smaller than the digital error. This apparatus has been designed accordingly. So we can see

Table I.

Measured resistance R_x (in Ω)	Absolute uncertainty ΔR_x (in Ω)	Relative uncertainty $\Delta R_x/R_x$
20.090	± 0.005	± 2.5 x 10^{-4}
99.50	± 0.02	± 2.0 x 10^{-4}
698.5	± 0.1	± 1.4 x 10^{-4}
998.2	± 0.2	± 2.0 x 10^{-4}

the $\Delta R_x/R_x$ experimental values are very close to the maximal theoretical value that can be obtained.

Finally, the determination of the resistance value is important but no essential, the essential part of our studies being the determination of the resistance variation values of the studied alloys. The relative uncertainty on the resistance measurements is 2×10^{-4} This represents a sufficient and appreciable accuracy for the studies made on our alloys.

4.2. MEASUREMENTS OF THE ΔR_x RESISTANCE VARIATION. — The determination of the ΔR_x resistance variation is obtained from the $[5\Delta V_u]$ read values ($5\Delta V_u = 5V_u - V_{\text{ref}}$), determined as previously seen by the relation: $\Delta R_x = [5\Delta V_u]R_i/(5V_i)V_i$ and $5\Delta V_u$ being obtained at ± 1 point for 20000 points.

So the relative value on the ΔR_x accuracy is given by the relation:

$$(\Delta(\Delta R_x)/\Delta R_x) = (\Delta(5\Delta V_u)/(5\Delta V_u)) + (\Delta V_i/V_i) = 10^{-4}$$

In fact, the real accuracy is smaller because the limit resolution is not high enough for the V_{ref} voltage D/A converter and because some uncertainty is introduced by the five-gain amplifier. Finally, the relative uncertainty on this measurement is probably 2×10^{-4}. That is leads to a resistance variation measurement of 2 mΩ with an uncertainty lower than 10%.

4.3. MEASUREMENTS OF THE E.M.F. GENERATED BY THE THERMOCOUPLES. — They have been obtained with a very good accuracy of 2 to 3 μV between 0 and 8000 μV for a temperature range of 273 to 573 K.

4.4. APPLICATIONS [19]. — This system has allowed us to study resistive and thermoelectric properties depending on the temperature of Au-Cr alloys built in ultra-high vacuum by controlled coevaporation.

Figure 5 represents $(R - R_0)/R_0$ (where R is the resistance at a temperature T and R_0, the resistance at room temperature) of samples of different thicknesses and compositions *versus* the temperature. These alloys have been chosen because they exhibit the lowest resistance variations, almost always greater than 10^{-3}, and in most cases between 10^{-3} and 10^{-2} The uncertainty introduced by the apparatus is negligible in most cases.

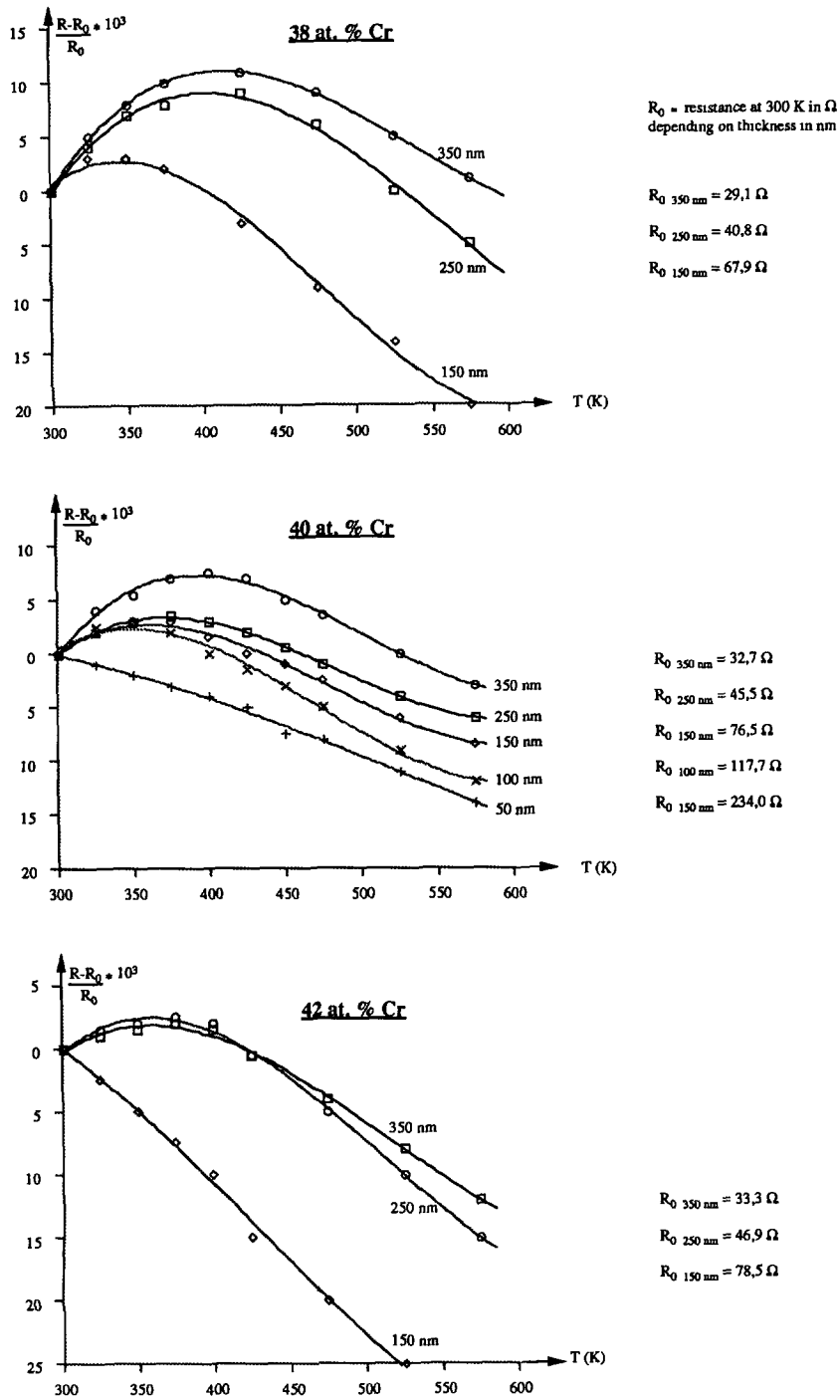

Fig. 5. — $(R - R_0/R_0)$ vs. temperature and thickness for Au-Cr alloys of different compositions.

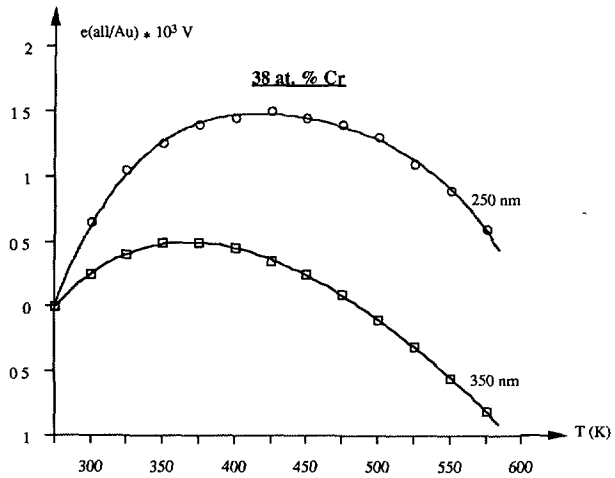

Fig. 6. — Variation of the e.m.f. e(alloy/gold) vs. temperature and thickness for an Au-Cr alloy with a 38 at% Cr concentration.

So very small resistance variations have been observed, (250 nm thick alloy with a 38 at% Cr concentration) in a wide temperature range, allowing us to consider applications as strain gauges for example.

Figure 6 represents the variations of the thermoelectric e.m.f. of the gold/alloy couple (the alloy has a 38 at% Cr content), *versus* the temperature for two thicknesses. The e.m.f. for this alloy is about several hundred μV. Its measurement is very accurate and allows an easy and accurate determination of the thermoelectric power of the considered couple.

5. Conclusion

During the experimental surveys performed in the laboratory, resistance values generally vary between 10 and 1000 Ω, for which the accuracy of the measuring apparatus is quite acceptable (about 2×10^{-4} as a relative value for the resistance measurement and 2 mΩ as absolute value for the resistance variation measurement). The accuracy obtained for the thermoelectric e.m.f. measurement is also acceptable. The absolute uncertainty remains constant over the whole temperature range (3 μV); the better the relative value of the accuracy (less than 10^{-3} at 373 K), the greater the rise in temperature. This apparatus has satisfactory technical characteristics for our studies, is easy to use and can be connected to a PC.

Therefore this system is particularly well adapted to our experimental process but also to all applications where AC and DC voltages are superposed. It enables us to know because of this essential quality and of an adaptable measurement device, thermoelectric e.m.f. and resistive values. This method could also be applied to all the devices that need low resistance variation measurements where the undesired thermoelectric e.m.f. or other DC voltages entail many problems.

References

[1] Gouault J., Richon G. and Hubin M., *Mesures* **4** (1972) 94.

[2] Gouault J., Ph.D. Thesis, Université de Rouen (1966).

[3] Thiesset G., Ph.D. Thesis, Université de Rouen (1984).

[4] Martin M. and Miquel R., "La mesure des fonctions de transfert en présence de bruit", Mesure Régulation Automatisme (Janvier 1978).

[5] Miquel R., "La mesure des fonctions de transfert", Toute l'électronique (Février 1975).

[6] Gazin J.F., Manuel d'applications C.I.L., Tome 1, Les amplificateurs opérationnels, THOMSON CSF (1974).

[7] Gazin J.F., Manuel d'applications C.I.L., Tome 3, Filtres actifs à amplificateurs opérationnels, THOMSON CSF (1974).

[8] INTERSIL, "Do's and dont's of applying A/D converters", Note d'application n° AO18 (1988).

[9] Soderquist D. and Erdi G., "The OP-O7 Ultra Low Offset Voltage Op. Amp., A Bipolar Op. Amp. that Challenges Choppers, Eliminates Nulling", Application notes N° 13, Precision Monolithic INC., Santa Clara, California (1979).

[10] Debroux J.F., "Des circuits analogiques plus performants avec les masses fictives", Electronique Applications N° 24 (1982).

[11] NATIONAL SEMICONDUCTOR, Linear Application Handbook, Santa Clara California (1978).

[12] FAIRCHILD SEMICONDUCTOR, Semiconductor Circuit Applications, Mountain View, California (1978).

[13] ANALOG DEVICES, Multiplier Application Guide, Norwood, Massachusetts (1982).

[14] ANALOG DEVICES Guide d'applications des convertisseurs N/A, CMOS Rungis (1982).

[15] Dordor P., Marquestaut E. and Villeneuve G., *Rev. Phys. Appl.* **15** (1980) 1607.

[16] Du Burck L., Rapport de stage DEA, Université de Rouen (1990).

[17] Lechevallier L., Ph.D. Thesis, Université de Rouen (1991).

[18] Richon G., Gouault J. and Herou J., *Thin Solid Films* **36** (1976) 55.