HAL
open science

Weak anchoring energy and pretilt of a nematic liquid crystal

G. Barbero, N.V. Madhusudana, Geoffroy Durand

To cite this version:

G. Barbero, N.V. Madhusudana, Geoffroy Durand. Weak anchoring energy and pretilt of a nematic liquid crystal. Journal de Physique Lettres, 1984, 45 (12), pp.613-619. 10.1051/jphyslet:019840045012061300 . jpa-00232389

HAL Id: jpa-00232389

https://hal.science/jpa-00232389v1

Submitted on 4 Feb 2008

HAL is a multi-disciplinary open access archive for the deposit and dissemination of scientific research documents, whether they are published or not. The documents may come from teaching and research institutions in France or abroad, or from public or private research centers.

L'archive ouverte pluridisciplinaire **HAL**, est destinée au dépôt et à la diffusion de documents scientifiques de niveau recherche, publiés ou non, émanant des établissements d'enseignement et de recherche français ou étrangers, des laboratoires publics ou privés.

Classification
Physics Abstracts
61.30 — 61.30E — 68.10E

Weak anchoring energy and pretilt of a nematic liquid crystal (+)

G. Barbero (*), N. V. Madhusudana (**) and G. Durand

Laboratoire de Physique des Solides, Bât. 510, Université de Paris-Sud, 91405 Orsay Cedex, France

(*Reçu le 6 mars 1984, accepté le 27 avril 1984*)

Résumé. — Nous étendons la technique de Rivière *et al.* pour mesurer la préinclinaison Φ et l'énergie d'ancrage (faible) d'un cristal liquide nématique orienté sur une lame transparente. Le nématique est placé dans un coin formé par la lame à étudier et une lame de référence donnant une orientation « homéotrope » forte. Au lieu d'utiliser une technique de réflexion totale, nous mesurons la différence de marche Δl entre lumière ordinaire et extraordinaire en fonction de l'épaisseur de l'échantillon. De la région épaisse nous déduisons la préinclinaison, de la région mince la force d'ancrage. Ce domaine des faibles épaisseurs ne pouvait être étudié par la technique précédente. L'épaisseur de transition $\tilde{d}$ est de l'ordre de la longueur d'extrapolation L caractérisant l'énergie de surface. Pour des lames traitées au silane et frottées, les valeurs typiques de Φ et L sont de l'ordre de 0,8 radian et 1 μm.

Abstract. — We extend the wedge technique of Rivière *et al.* to measure the pretilt angle Φ and the (weak) anchoring energy of a nematic liquid crystal oriented on a suitably treated glass surface. The liquid crystal is placed in a wedge shaped space formed by the plate to be studied and a « standard » plate giving a strong homeotropic anchoring. Instead of using a total reflection technique, we measure the optical path difference (Δl) between the ordinary and extraordinary waves, as a function of the sample thickness (d). From an analysis of this variation, we obtain the pretilt angle from the region of large thickness, and the anchoring energy from the region of small thickness, a domain which could not be studied with the previous technique. The transition thickness $\tilde{d}$ is comparable with the extrapolation length L associated with the surface energy. Typical values of Φ and L for rubbed silane coated plates are $\sim$ 0.8 radian and $\sim$ 1 μm respectively.

Control and measurement of the tilt angle and the corresponding anchoring energy of the nematic director (i.e., the direction of average orientation) on solid surfaces are topics of much current interest [1-5]. In particular, a relatively *weak* anchoring energy is very useful for many physical effects which have applications in practical devices. Earlier studies on this important problem have used various methods, for instance the « Freedericksz transition » technique, i.e., the observation of a volume texture instability under the action of an external electric or magnetic field. This instability threshold is sensitive to the anchoring energy on the surface [6-8]. Ryschenkov and Kléman [9] have used another technique, *viz.*, the measurement of the dimension of surface

(+) Work supported by French ANVAR under contract No 83 44 07 00.
(*) On leave from Unical Liq. Cryst. Group, Dip. Fisica, Univ. Calabria 87036, Rende (Italy).
(**) Permanent address : Raman Research Institute, Bangalore 560080, India.

Article published online by EDP Sciences and available at http://dx.doi.org/10.1051/jphyslet:019840045012061300

defects which provides an estimate of the anchoring energy. But it may be difficult to form such defects on a uniformly treated surface. Further, using these techniques, it is difficult to independently determine the angle of pretilt from the symmetry direction of the orientation normal or parallel to the plate. Rivière *et al.* [10] have used a wedge geometry and a total reflection technique to measure the pretilt and the surface energy. In this paper, we present an analogous method for determining the pretilt and the anchoring energy, using also a wedge geometry, but which involves the measurement of the director orientation at the surface through the measurement of the bulk birefringence. One of the walls of the wedge is the surface of interest while the other gives a « homeotropic » alignment (director normal to the surface) with a strong anchoring energy. Because of the curvature elasticity from the distortion of the bulk of the nematic, the surface torque increases with decreasing sample thickness d, resulting in a well defined departure from linearity for the optical path difference as function of (small) d. For dimensional reasons, the surface anchoring energy is usually characterized by an extrapolation length L [11, 12] which lies in the range of 0.1-10 μm. We obviously expect the departure from linearity in $\Delta l(d)$ to occur when $d \sim L$. We obtain the pretilt angle from the « thick » region ($d > L$) and the strength of the anchoring around this direction of pretilt from the « thin » region ($d < L$). We have found that the action of rubbing on silane coated glass plates yields a tilt angle which can be varied between 0.2 to 1.1 radian, and a relatively weak anchoring energy, with the corresponding L in the range of $\sim$ 1 to 15 μ. A possible mechanism for the origin of the weak anchoring energy is also suggested.

Consider a nematic liquid crystal cell with a « hybrid » orientation such that the easy axis makes angles equal to Φ_1 and Φ_2 on the upper and lower plates respectively, the angles being measured with respect to the normals going into the cell (Fig. 1). In the present analysis we consi-

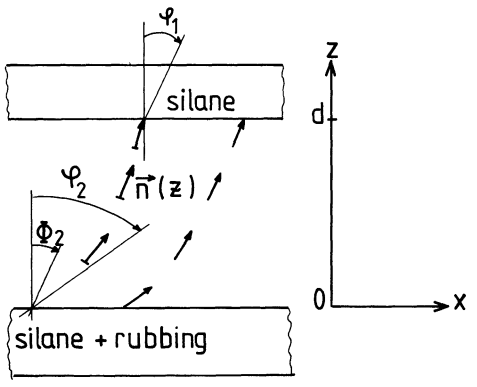

Fig. 1. — Director (**n**) distribution in the « hybrid » cells used in the investigation.

der only upper plates with $\Phi_1 = 0$ (homeotropic alignment). $\Phi_2 = \Phi$ gives the « pretilt » angle on the lower plate. We also assume that the angle dependence of the anchoring energy is given by the usual form, *viz.*,

$$F_{S1} = \frac{W_1}{2} \sin^2 \phi_1 = \frac{K_3}{2 L_1} \sin^2 \phi_1$$

and (1)

$$F_{S2} = \frac{W_2}{2} \sin^2 (\Phi - \phi_2) = \frac{K_3}{2 L_2} \sin^2 (\Phi - \phi_2)$$

where F_{Si} ($i = 1, 2$) are the free energy per unit area of the surface, W_1 and W_2 the anchoring energies, ϕ_1 and ϕ_2 the angles made by the director and L_1 and L_2 the extrapolation lengths on the

two surfaces and K_3 is the volume bend curvature elastic constant of the nematic liquid crystal. The director configuration is deformed in the bulk of such a hybrid cell. The profile of the director has been calculated in reference [12] using the Euler-Lagrange equations associated with the total free energy of distortion :

$$(1 - K \sin^2 \phi)\,(\mathrm{d}\phi/\mathrm{d}z)^2 = c^2 \tag{2}$$

where $K = 1 - (K_1/K_3)$ is a measure of the anisotropy of the curvature elastic constants, K_1 being the splay constant, and c an integration constant determined by the boundary conditions. Since the nematic transmits torques, we get at the two surfaces the torque balance equations :

$$\frac{2\,L_1}{d}\sqrt{1 - K \sin^2 \phi_1}\; I(\phi_1, \phi_2) = \sin 2\,\phi_1 \tag{3}$$

and

$$\frac{2\,L_2}{d}\sqrt{1 - K \sin^2 \phi_2}\; I(\phi_1, \phi_2) = \sin 2(\Phi - \phi_2) \tag{4}$$

where

$$I(\phi_1, \phi_2) = \int_{\phi_1}^{\phi_2} \sqrt{1 - K \sin^2 \phi}\; \mathrm{d}\phi \tag{5}$$

we get from (3) and (4) a relationship between the angles made by the director on the two surfaces :

$$\frac{L_1}{L_2}\sqrt{\frac{1 - K \sin^2 \phi_1}{1 - K \sin^2 \phi_2}} = \frac{\sin 2\,\phi_1}{\sin 2(\Phi - \phi_2)}. \tag{6}$$

In order to determine L_1, L_2 and Φ experimentally, we use an optical technique. The path difference between the ordinary and extraordinary waves for a nematic liquid crystal cell described above is given by :

$$\Delta l = n_o\, d\left[\frac{J(\phi_1, \phi_2)}{I(\phi_1, \phi_2)} - 1\right] \tag{7}$$

where

$$J(\phi_1, \phi_2) = \int_{\phi_1}^{\phi_2} \sqrt{\left(\frac{1 - K \sin^2 \phi}{1 - R \sin^2 \phi}\right)}\, \mathrm{d}\phi \tag{8}$$

$R = 1 - (n_o/n_e)^2$, n_o and n_e the ordinary and extraordinary refractive indices respectively. By measuring Δl as a function of d, it is possible to estimate the values of L_1, L_2 and Φ if we use a liquid crystal for which n_o, n_e and K are known from independent experiments.

All our experiments have been made on MBBA (methoxybenzilidene butyl aniline) at room temperature. The measurement of the thickness dependence of Δl has been made on the same cell by taking it in the form of a wedge, which is formed by placing a mylar spacer ($d = 50$ μ) or a stainless steel wire ($d = 49$ μ) at one end of the cell. The cell is formed such that the director is in the plane normal to the edge of the wedge (Fig. 2). The angle of the wedge is so small ($\simeq 4 \times 10^{-3}$ rad) that the equations derived above can be used at any d without any noticeable error. We also assume that the surface conditions are sufficiently uniform over the region of interest.

We have used DMOAP silane coated glass plates to get a homeotropic alignment on the « upper » surface of the cell. To obtain L_1, the corresponding extrapolation length, we have measured the thickness dependence of Δl for a cell whose lower plate has an obliquely evaporated silicon monoxide layer, which is known to give a « strong » anchoring ($L_2 \sim 0.1$ μm) [10, 12, 13]. The Δl values were measured using a tilting compensator (Leitz M) in conjunction with a Leitz

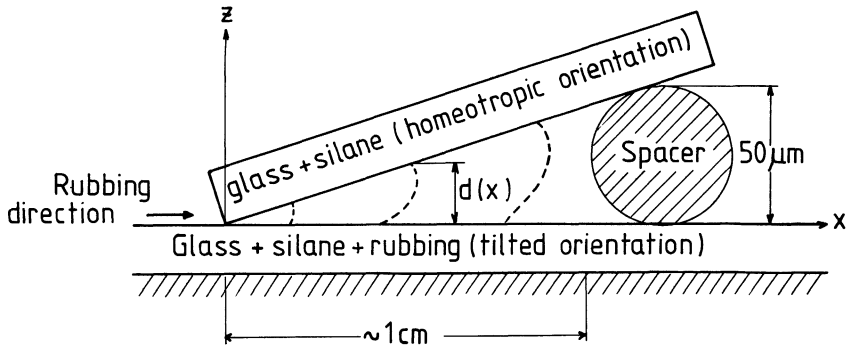

Fig. 2. — The wedge shaped cell used to measure the optical path difference as a function of the thickness of the sample.

polarizing microscope. The result on the silane-SiO cell is shown in figure 3a. Δl exhibits a strictly linear dependence on d, down to $\sim$ 0.4 µm, with a slope compatible with planar orientation. This means that the hybrid texture remains unchanged in the range of observed thickness on the SiO plates. Our experiment hence confirms that the silane coating also gives a « strong » homeotropic anchoring, in agreement with some earlier measurements [6, 10]. For the purpose of the present investigation, we assume that the homeotropic anchoring remains strong for the rest of the experiments.

We have tried several techniques to obtain a tilted orientation with a relatively weak anchoring. In the present letter we report results on silane coated plates coated plates subjected to a rubbing action on paper. We either rubbed the plates just prior to the polymerization of silane or after polymerization. In the latter case, the plates were cleaned with acetone before rubbing. The rubbing strokes were always given in the same direction on any given glass plate. Figure 3b shows the typical results on $\Delta l(d)$ obtained with plates rubbed after polymerization. It is interesting to note that (i) at large d, the path difference varies linearly with d, but with a slope distinctly lower than that in the case of SiO-silane cells (Fig. 3a); (ii) the extrapolation of the linear part does

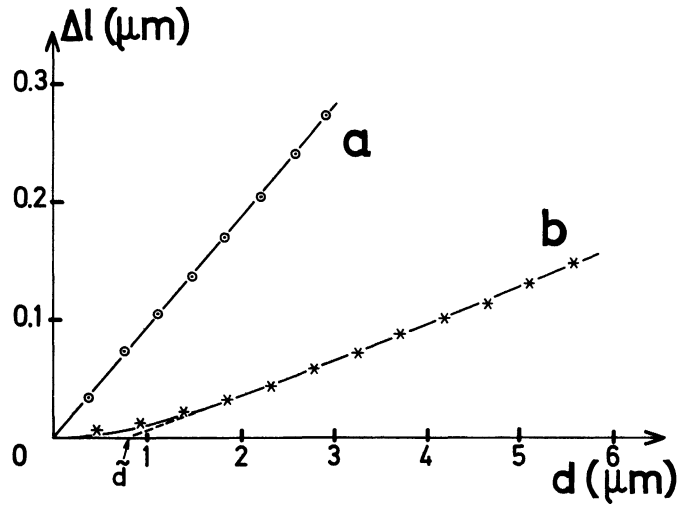

Fig. 3. — Measured values of the optical path difference (Δl) in (a) silane-SiO cells and (b) 30 times rubbed silane-unrubbed silane cells as functions of the sample thickness d. The continuous curve in (b) is the theoretical variation calculated using the parameters L_2 = 0.8 µm and Φ = 0.75 radians. The extension of the linear part intercepts the d-axis at $\tilde{d} \simeq L_2$.

not go through $d = 0$, but corresponds to a finite value of d; (iii) the variation of Δl is not linear for small d. These results can be understood if the rubbed silane plates produce an alignment with a non-zero pretilt angle and with a relatively weak anchoring energy. In that case, for $d \sim L_2$, the surface torque at the rubbed silane surface due to the influence of the (untreated) silane plate is sufficiently strong compared with the torque due to the anchoring energy. The curvature can be understood by a simple analysis which ignores the elastic anisotropy ($K = 0$). Then, for small Φ, and $d < L$ it is possible to write equation (7) as

$$\Delta l \simeq \frac{n_o}{6}\left[1 - \left(\frac{n_o}{n_e}\right)^2\right]\frac{d}{\left(1 + \frac{L_2}{d}\right)^2}\Phi^2 \tag{9}$$

which shows that near $d \simeq 0$, $\Delta l \sim d^3$ leading to the observed curvature in the variation of Δl with d, and would give a linear asymptote for large d, crossing $\Delta l = 0$ for $\tilde{d} = 2\,L$. However, an exact calculation valid for large d gives a linear asymptote [17] with

$$\tilde{d} = L_2\, f(K, \Phi)\, \frac{\dfrac{1}{\sqrt{1 - R\sin^2\Phi}} - \dfrac{J(0, \Phi)}{I(0, \Phi)}}{\dfrac{J(0, \Phi)}{I(0, \Phi)} - 1} \tag{10}$$

where

$$f(K, \Phi) = (1 - K\sin^2\Phi)/\{2 - K\sin^2\Phi + (K\sin 2\Phi/2\sqrt{1 - K\sin^2\Phi})\}\,.$$

In the one constant approximation $f(0, \Phi) = 1/2$ and for small Φ, it is easy to show that $\tilde{d} = L_2$. Since $(1 - K)/(2 - K) < f(K, \Phi) < 0.5$, and $K \simeq 0.4$, $\tilde{d} \simeq L_2$ (Fig. 3b).

In our case, Φ is generally large, and further, we cannot neglect the elastic anisotropy. Hence we have made calculations on the basis of the exact relations (6-8), using the experimentally known values of $n_o = 1.57$ for $\lambda = 5\,461$ Å [14, 15], $K = 0.37$ [15, 16], $R = 0.239$ [14, 16], and treating L_2 and Φ as parameters. The calculated curve has also been plotted in figure 3b. The fitting shows some dispersion, which means that the anchoring properties may not be very uniform over the region of measurement. Further, in some cases the experimental points at low values of d lie above the theoretical curve, indicating that the edge of the wedge may have a finite thickness. We also made measurements on many cells treated with the same, as well as a different, number of rubbings. We summarize the results in the form of a Φ *versus* L_2 plot in figure 4. Our results on samples with 30 « short » (1 cm) rubbings give $L_2 = 1.30 \pm 0.2$ µm and $\Phi = 0.8 \pm 0.25$ radian. When the rubbing is done *before* polymerization of the silane coating, the tilt angle is found to be quite small ($\Phi \sim 0.2$-0.3 radians) and the corresponding anchoring energy also rather weak ($L_2 \sim 15$ µm).

An open question remains : what is the direction of Φ, compared to the direction of rubbing ? To check this point, we have made conoscopic examination of a cell with two rubbed silane plates such that the rubbing directions are antiparallel, and with a uniform thickness of 49 µm. Looking from the plate into the bulk nematic, the director is found to tilt away from the direction of rubbing (Fig. 2).

In order to understand the mechanism of anchoring we have examined plates rubbed after polymerization under an electron microscope. The surface shows very fine grooves along the rubbing direction, with a width < 0.1 µm. Since in our experiments, the sample thickness is generally much larger than the lateral size of the grooves, we can speculate about the pretilt and weak anchoring of the rubbed silane plates with a naive model. Let us suppose that the easy axis in the grooved region is at a tilt angle Φ different from zero and further that the anchoring energy for such a region is somewhat smaller than that in the unaffected silane region (which produces

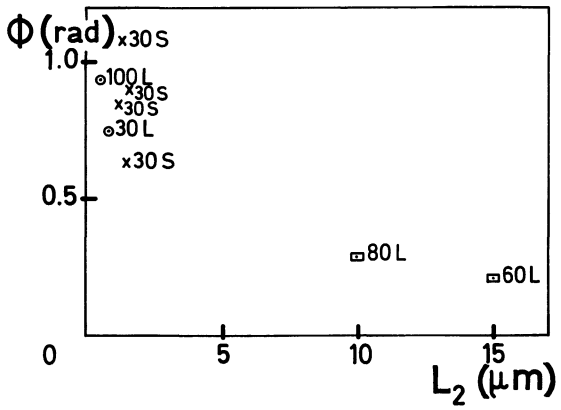

Fig. 4. — Summary of the parameters L_2 and Φ found for various cells used in the measurements. The numbers against the symbols indicate the number of rubbings. Crosses : short (1 cm) and open circles : long (20 cm) rubbings after polymerization of silane; open squares : long rubbings before polymerization of silane.

zero tilt angle). A simple calculation based on the idea that such a « hybrid » surface can be replaced by a surface with « averaged » properties shows that it is possible to get relatively low values of the effective anchoring energy.

If an area S_I has been affected by the rubbing action, and the corresponding anchoring energy is W_I, then the total surface energy can be estimated as

$$F_S = \frac{1}{2} W_H \frac{(S - S_I)}{S} \sin^2 \phi + \frac{1}{2} W_I \frac{S_I}{S} \sin^2 (\phi - \Phi) \tag{11}$$

where W_H is the anchoring energy of the unaffected silane coated region, and S the total area of the surface. We write the surface energy also in the form

$$F'_S = \frac{1}{2} \tilde{W} \sin^2 (\phi - \tilde{\Phi}) \tag{12}$$

where $\tilde{W}$ and $\tilde{\Phi}$ are the « effective » values of the anchoring energy and the tilt angle over the entire surface. The anchoring energy appears only in the surface torque and hence we can equate the surface torques calculated using F_S and F'_S. After some simple algebra we get

$$\frac{\tilde{W}}{W_H} = \sqrt{\left(\frac{n}{r} \sin 2\,\Phi\right)^2 + \left[(1 - n) + \frac{n}{r} \cos 2\,\Phi\right]^2} \tag{13}$$

and

$$\tilde{\Phi} = \frac{1}{2} \tan^{-1} [n \sin 2\,\Phi / \{ (1 - n)\, r + n \cos 2\,\Phi \}] \tag{14}$$

where $n = S_I/S$ and $r = W_H/W_I$. It is easy to see that as $\Phi \to \pi/2$, $\tilde{W}$ can become vanishingly small with $\tilde{\Phi} = \pi/4$, irrespective of the value of r. Indeed the experimental points are concentrated about $\tilde{\Phi} = \pi/4$ (Fig. 4) for plates rubbed after polymerization. The corresponding L_2 lies in the range of 1-1.5 μm, which is an order of magnitude larger than the assumed 0.1 μm for the strongly anchored homeotropic plate. This means that $\tilde{W}$ for the rubbed surface is an order of magnitude lower than for the homeotropic plate. Thus for plates rubbed after polymerization, the grooves seem to give a planar orientation. On the other hand, for plates rubbed before polymerization, Φ appears to be substantially lower than $\pi/2$. In reality, a distribution of grooves with different

values of r and Φ, is probably present and this makes a quantitative analysis difficult. We note that the $\sin^2 \phi$ form of the anchoring energy which saturates as a function of ϕ is physically responsible for the reduction of $\tilde{W}$. Indeed any other form which also saturates as a function of angle is expected to lead to a similar result.

In conclusion, we have extended the wedge method of Rivière [10] which allows the determination of both the pretilt angle and the corresponding anchoring energy. The wedge method replaces the external field necessary, in the Freedericksz transition technique for instance, by the mechanical stress imposed by a second surface with a different orientation. In Rivière's work [10], the surface angle was measured by a method of total reflection. The method could only be used for relatively thick samples because the reflection coefficient was calculated from the assumption of the existence of a thick enough homogeneous layer close to the surface. Our new method derives the surface angle from the bulk birefringence of the nematic liquid crystal. This allows us to explore samples of any thicknesses, including in principle thicknesses lower than the wave length of light, which cover the interesting « thin » region, where the thickness d is lower than, or comparable to, the extrapolation length L_2 characterizing the surface energy. Using this method, we have measured the pretilt and anchoring energy of rubbed silane coated glass plates. The mean value of the director pretilt angle appear to be $\simeq \pi/4$, as a result of a competition between the unaffected silane ($\Phi = 0$) region and the grooved region ($\Phi \simeq \pi/2$). The resulting anchoring energy is weaker by an order of magnitude ($L_2 \simeq 1$ µm). We think that our extension of the wedge method is a useful step toward the mastering of surface anchoring for potential application in nonlinear optics, displays, and so on, using nematic liquid crystals.

Acknowledgments.

We thank Mme Boix for making the SiO coated calibration plates, Ph. Martinot-Lagarde, J. F. Palierne, M. Cagnon and Y. Galerne for help with the experiments and calculations, and P. Ballongue for the electron microscope pictures.

References

[1] Kléman, M., *Points, lignes, parois*, Les Editions de Physique (1977) and references therein.
[2] Cognard, J., *Mol. Cryst. Liq. Cryst., Suppl. Ser.* **1** (1982) 1.
[3] Yang, K. H., *J. Physique* **44** (1983) 1051.
[4] Barbero, G., Simoni, F. and Aiello, P., *J. Appl. Phys.* **55** (1984) 304.
[5] Van Sprang, H., *J. Physique* **44** (1983) 421.
[6] Naemura, S., *J. Physique Colloq.* **40** (1979) C3-514 ; *Appl. Phys. Lett.* **33** (1978) 1.
[7] Yang, K. H., *J. Appl. Phys.* **53** (1982) 6742 ; *Jpn J. Appl. Phys.* **22** (1983) 389.
Yang, K. H. and Rosenblatt, C., *Appl. Phys. Lett.* **43** (1983) 62.
[8] Barnik, M. I., Blinov, L. H., Korkishko, T. V., Umansky, B. A. and Chigrinov, V. G., *Mol. Cryst. Liq. Cryst.* **99** (1983) 53.
[9] Ryshenkov, G. and Kléman, M., *J. Chem. Phys.* **64** (1976) 404.
[10] Rivière, D., Levy, Y., Guyon, E., *J. Physique Lett.* **40** (1979) 215.
[11] De Gennes, P. G., *Physics of Liquid Crystals* (Clarendon Press) 1974, p. 77.
[12] Barbero, G. and Barberi, R., *J. Physique* **44** (1983) 609.
[13] Komitov, L. and Petrov, A. G., *Phys. Status Solidi* **76** (1983) 137.
[14] Haller, I., *J. Chem. Phys.* **57** (1972) 1400.
[15] Chang, R., *Mol. Cryst. Liq. Cryst.* **28** (1974) 1.
[16] Oldano, C., Strigazzi, A., Miraldi, E., Taverna-Valabrega, P. and Trossi, L., *J. Physique* **45** (1984) 355.
[17] By using the theorem of averages, it is easy to show that the term in curly brackets of equation (10) is always 0.