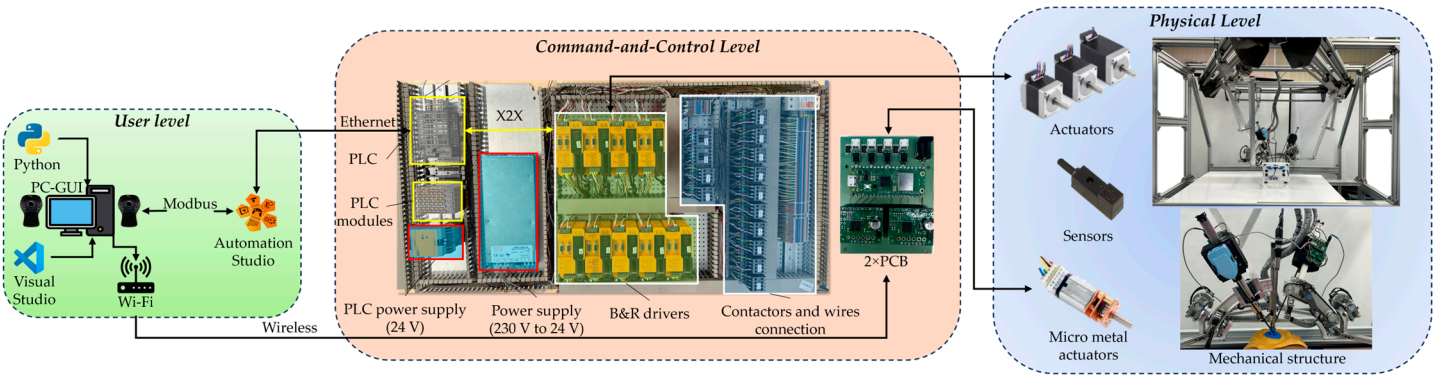
User level
Python
PC-GUI
Modbus
Automation Studio
Visual Studio
Wi-Fi
Wireless
Command-and-Control Level
Ethernet
X2X
PLC
PLC modules
PLC power supply (24 V)
Power supply (230 V to 24 V)
B&R drivers
Contactors and wires connection
2×PCB
Physical Level
Actuators
Sensors
Micro metal actuators
Mechanical structure