HAL
open science

Enhancement of System Observability During System-Level Radiation Testing through Total Current Consumption Monitoring

Ivan Slipukhin, Andrea Coronetti, Rubén García Alía, Frédéric Saigné, Jérôme Boch, Luigi Dilillo, Ygor Aguiar, Carlo Cazzaniga, Maria Kastrioto, Torran Dodd

▶ **To cite this version:**

Ivan Slipukhin, Andrea Coronetti, Rubén García Alía, Frédéric Saigné, Jérôme Boch, et al.. Enhancement of System Observability During System-Level Radiation Testing through Total Current Consumption Monitoring. 2023 European Conference on Radiation and Its Effects on Components and Systems, Sep 2023, Toulouse, France. hal-04266900

HAL Id: hal-04266900

https://hal.science/hal-04266900

Submitted on 31 Oct 2023

HAL is a multi-disciplinary open access archive for the deposit and dissemination of scientific research documents, whether they are published or not. The documents may come from teaching and research institutions in France or abroad, or from public or private research centers.

L'archive ouverte pluridisciplinaire **HAL**, est destinée au dépôt et à la diffusion de documents scientifiques de niveau recherche, publiés ou non, émanant des établissements d'enseignement et de recherche français ou étrangers, des laboratoires publics ou privés.

Enhancement of System Observability During System-Level Radiation Testing through Total Current Consumption Monitoring

Ivan Slipukhin, Andrea Coronetti, *Associate Member, IEEE*, Rubén García, *Member, IEEE*, Frédéric Saigné, Jerôme Boch, Luigi Dilillo, *Member, IEEE*, Ygor Q. Aguiar, *Member, IEEE*, Carlo Cazzaniga, Maria Kastriotou and Torran Dodd

***Abstract*—In a system-level test of electronics, the monitoring of total current consumption combined with other observations improves the analysis of system performance and allows for more efficient identification of radiation-induced errors during the test execution.**

I. INTRODUCTION

system-level radiation testing of electronics is an increasingly used method that enables cost-efficient radiation tolerance evaluation of systems that are at the final stage of their development [1]. One of the main issues of system-level radiation testing is that its outcome is typically expressed as pass/fail. With the enhancement of system observability, the consolidation of collected data can be further used for the investigation of root causes of detected failures. This information can be then utilized to improve system radiation tolerance by re-design (e.g., replacement of radiation-sensitive components) or by application of different mitigation techniques.

An example approach to system-level observations has been demonstrated [2] by performing continuous monitoring of analog signals located at different sensitive nodes of the System Under Test (SUT). With this approach, the possibility to detect Single-Event Transients (SETs) responsible for system failures was demonstrated. In another study [3], the sampling of a set of signals around the SUT allowed to determine the components with the highest Total Ionizing Dose (TID) degradation, used in the system.

The distributed measurement systems, such as those used at particle accelerator facilities [4], make use of the combination of in-house electronics designs, primarilty based on Commercial Off-the-Shelf (COTS) components and commercial modules. In both cases, the design of system-level test is often constrained by the fact of dealing with finalized components (e.g., commercial products), the detailed architecture of which might be not known. This complicates the design of the system-level test that would allow to perform hardware-level observations of the particular elements of the system.

In this article, we demonstrate the possibility to improve observability for digital and mixed-signal systems with limited hardware access or design familiarity by monitoring the overall current consumption of the SUT in time and its correlation with observations made through data retrieval from the SUT (software-level observations). The primary scope of the work is related to the CERN accelerator complex, but it may be generalized and find applications elsewhere. In particular, the experimental results introduced in this article are the outcome of a test campaign in which the target system was under irradiation of an atmospheric-like neutron beam for the purposes of its Single-Event Effect (SEE) characterization.

This study has received funding from the European Union's Horizon 2020 research and innovation programme under grant agreement no. 101008126.

Ivan Slipukhin (ivan.slipukhin@cern.ch) and Andrea Coronetti are with CERN, CH-1211 Geneva, Switzerland and with Institute d'Electronique et des Systèmes, Université de Montpellier, 34090 Montpellier, France.

Rubén García Alía and Ygor Q. Aguiar are with CERN, CH-1211 Geneva 23, Switzerland.

Frédéric Saigné, Jerôme Boch and Luigi Dilillo are with Institute d'Electronique et des Systèmes, Université de Montpellier, 34090 Montpellier, France.

Luigi Dilillo is also with CNRS (Centre national de la recherche Scientifique), France.

Carlo Cazzaniga, Maria Kastriotou and Torran Dodd are with the ISIS Facility, U.K. Research Innovation (UKRI)-Science and Technology Facilities Council (STFC), Swindon SN2 1SZ, U.K.

II. EXPERIMENT OVERVIEW

A. The System Under Test

The chosen SUT is a general purpose single-event effect (SEE) tester which was designed to qualify digital and analog Integrated Circuits (ICs) at the CERN High-Energy Accelerator Mixed Field (CHARM) irradiation facility [5]. As such, it must be made radiation tolerant to sustain the irradiation during a single-week CHARM test in the harshest position. The CHARM facility recreates the radiation field that can be found in the proximity of high-energy particle accelerators that is mainly composed of high-energy hadrons, such as protons, pions and neutrons with a broad spectrum, spreading from thermal energies up to several GeV, and is also accompanied by the flux of photons. In such an environment the SUT is concurrently subjected to both TID and Displacement Damage (DD) degradation, as well as SEEs.

The SUT was designed using COTS components and consists of the motherboard with Microchip SmartFusion2 System-on-a-Chip (SoC) as the main processing unit, and a customizable daughterboard hosting the IC under test (Fig. 1). For the purposes of system-level test, the SUT was configured to perform an example functionality that could be typically implemented during its operation at the target environment. The daughterboard was hosting a Static Random Access Memory (SRAM) manufactured by Alliance. This memory was the Device Under Test (DUT) and the system was performing its continuous monitoring to detect Single Event Upsets (SEUs) and SELs that might have occurred in the SRAM while it was irradiated. All the data related to the performed functionality was exchanged using an RS-485 bidirectional serial link with the host computer. The whole system required a single 12 V power supply line to provide power to all its elements, including the DUT.

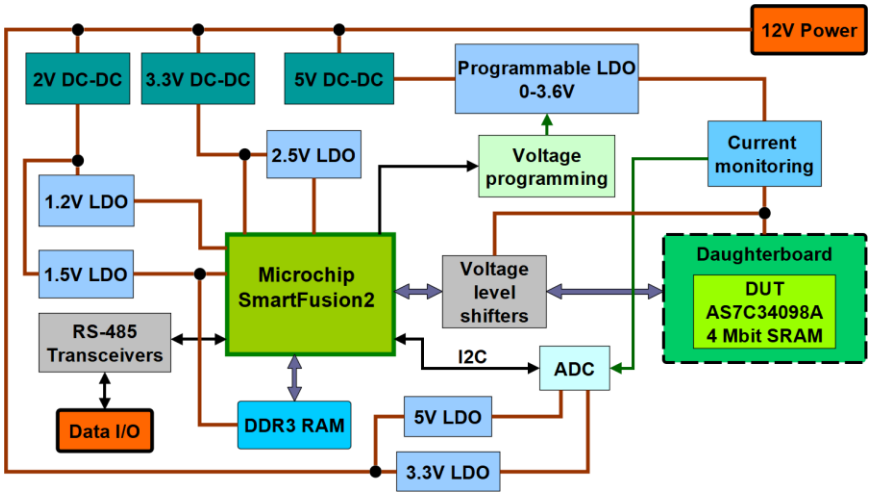

Fig. 1. Block diagram of the System Under Test.

B. System-Level Test with the Atmospheric Neutron Beam

The aim of the performed test was to investigate the SEE-induced system failures under a radiation field representative of the target environment. The atmospheric neutron beam with a spectrum ranging from thermal neutrons to high-energy (up to 800 MeV) was provided by the ChipIr instrument [6], which is a part of the ISIS facility (based at the Rutherford Appleton Laboratory, Didcot, UK). During irradiation, the neutron flux was calculated by monitoring the high-energy part of the spectrum (above 10 MeV) and was on average equal to $5.6 \cdot 10^6$ n/cm^2/s.

The test consisted of simultaneous irradiation of four stacked SUTs (Fig. 2). Therefore three out of four systems were subjected to the neutron beam that has already passed through the volume of other Printed Circuit Boards (PCBs) placed closer to the beam guide output. Due to the fact that neutrons, unlike charged particle species, do not lose their energy through direct matter ionization, the loss of beam intensity was expected to be non-significant; therefore, it was assumed

that all four SUTs were exposed to the particle beam with comparable spectrum and flux. The utilization of a neutron beam simplifies the testing of complete systems, in which complex geometry is normally a source of energy attenuation when a charged particle beam is used [7]. For the same reason, the utilization of atmospheric neutron beam allows to exclude the TID degradation of the tested system, and account only for SEE-induced failures. The beam profile was adjusted to cover the entire area of the SUT and DUT,and had a rectangular shape with sides of 11 cm and 19 cm respectively.

C. System Observations

The described system-level test implemented a set of new features to enhance the observation of radiation effects in the SUT. Their objective was to maximize the capability of identifying parts of the system that would suffer from SEEs and cause the failure of the system as a whole. Determining these elements is a key task in the analysis of the test data. In parallel, system observations could also be used to increase the operation observability of the SUT during the test, as they give a detailed view of the system behavior and can be used to detect deviations from normal functionality.

Performed observations were split into two categories. The first set, which can be also described as hardware observations, among others included the monitoring of the current drawn by each of the tested SUTs on the 12 V supply lines, corresponding to their total current consumptions. This measurement was performed with a periodicity of around one second. The second set, grouped as the software observations, concerned the data retrieval from the SUT using the default digital interface (RS-485). Apart from the data related to the normal functionality of the system (DUT observations), additional information was gathered from the system to increase the observability of its operation during the test. These measurements included system Real-Time Clock (RTC) value, board temperature, voltage and current consumption of the tested SRAM IC. Similarly, the sampling of these data was logged by the host PC once per second.

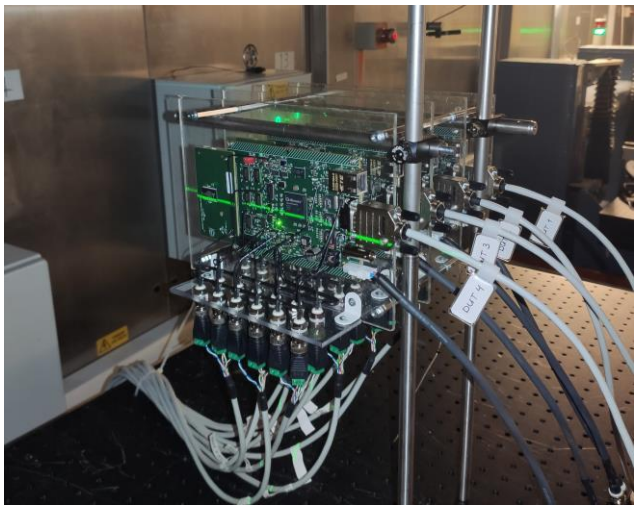

Fig. 2. The stack of four Systems Under Test installed at the ChipIr facility in front of the neutron beam guide output.

III. System-Level Testing Results and Discussion

The results presented below are the outcome of the observations gathered during 54 hours of continuous irradiation of four SUTs under the atmospheric neutron beam. The total high-energy neutron fluence collected over this time period was equal to $1.11 \cdot 10^{12}$ n/cm^2. A predefined decision logic was applied during the test to perform the system recovery after the functionality was lost. Failure modes (FM) were assigned to different criticality classes depending on their severity (Table I). For each criticality class, a specific action was executed by the operator immediately after the failure encounter.

TABLE I

OBSERVED SEE-INDUCED FAILURE MODES OF THE SYSTEMS UNDER TEST.

Figures Criticality class	FM	Color code on	Description	Action
Transparent to the system	0	Dotted black	Error in data received from SUT	No action
	1	Dotted green	Local time reset to the default value (2000-01-01 00:00:00)	
	2	Dotted blue	Local time reset to non-default value	
	3	Dotted yellow	Board temperature wrong reading	
Soft loss of functionality	4	Dashed red	Loss of communication, with subsequent reconfiguration and restart	SUT reconfiguration
Hard loss of functionality	5	Dashdot brown	Loss of communication and failure to retrieve software observations	SUT power cycle
	6	Dashdot grey	Loss of communication and failure to retrieve system state information	
	7	Dashdot violet	Non-recoverable communication loss	
	8	Dashdot orange	Error related to SEL monitoring system	
Permanent loss of functionality	-	-	(Not observed)	SUT power down

All of the tested SUTs remained functional until the end of the irradiation. Furthermore, no degradation in the system's performance has been observed, i.e., the frequency of system failures was not increasing over the irradiation time. It should be noted that the system failures were detected solely based on the software set of observations; the hardware observations were executed in parallel, they were not taken into account for the failure detection and were only used in post-test analysis.

The total current consumption of each of the SUT has been recorded throughout the whole duration of the test. All system failures observed during irradiation were correlated to the recorded current supplied to each of the SUTs. In Figures 3 5, the blue regions signify the time over which the SUT has been delivering the whole functionality, and purple lines are the timestamps of the SELs detected by the tested system in the DUT. Due to the paper size limitation, only the fragments of the recorded waveforms were included with this submission, however, the final version of the paper will contain the collected data in its entirety.

Current consumption profiles contain particular features that can be associated with the system failures and other events observed through the software-level communication with the SUTs. The disruptions in time periods showing the complete delivered functionality can be normally linked to system failures detected through software observations. Those, in turn, can be associated with the features of the current consumption evolution. For example, every loss of functionality can be always correlated with a drop in current consumption and a certain system-level failure beforehand.

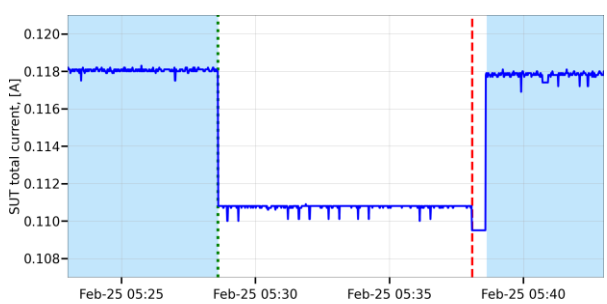

Fig. 3. The correlation of SUT2 loss of functionality with the occurrence of the failure mode 1 and decrease in the consumed current.

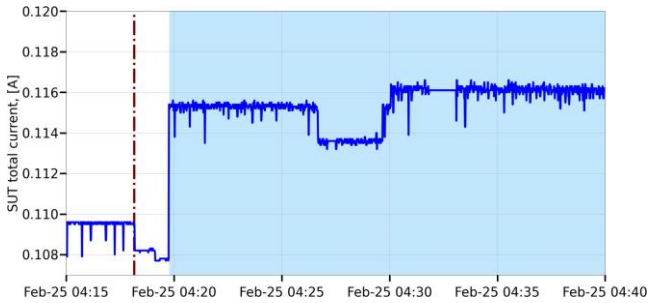

Fig. 4. The reduction of SUT3 current consumption that is not correlated with any event recorded with the software observations.

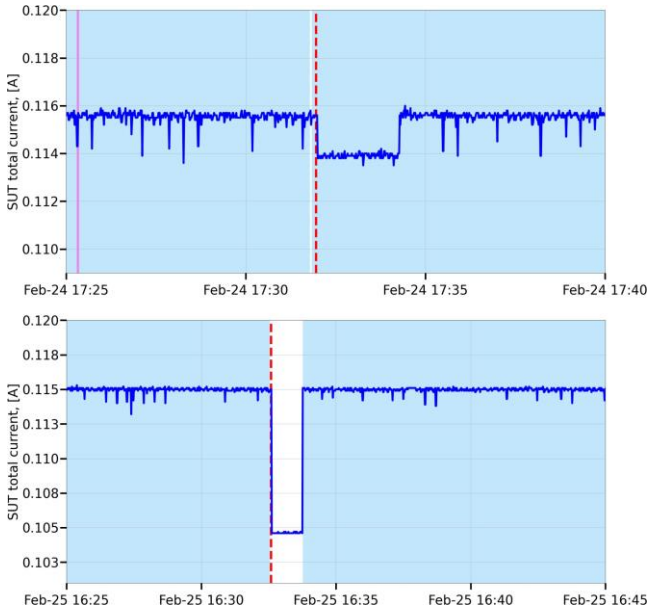

Fig. 5. Soft losses of SUT4 functionality, that can be associated with different changes in SUT total current consumptions.

It should be noted that most of the failures classified as soft and hard losses of functionality are accompanied by the reduction of current consumption. In particular, every soft loss of functionality can be associated with an abrupt decrease of the current consumed by the SUT (Fig. 3), provided that the system was in a fully functional state before it (the only exception was observed in SUT3, on Feb-24 around 4:00). Noticeably, such decreases of current consumption are also preceded by the events that were assumed to be transparent to the system (assigned to failure modes 1 and 2). At the same time, the post-analysis of the collected data has revealed that the SUT was stopping to deliver its full functionality during the periods of decreased current consumption. This was observed by the absence of recordings of the SEU or SEL event data from the DUT, despite the presence of impinging neutron beam. During the test campaign, no action was taken to restore the system operation on the occurrence of such events, the SUTs were kept functional until a more severe failure was encountered requiring system reconfiguration or power cycle. Hence, if the current consumption information was taken into account during the system-level test, failure modes 1 and 2 would be classified as soft or hard losses of functionality, depending on how the SUT could be recovered after their occurrence. In case those events could be classified as soft losses of functionality, a significant increase in failure cross-section could be observed. Table II demonstrates the influence of the current consumption observation on the total cross-section of different failure modes grouped by the criticality classes. While the cross-section of events that are transparent to the system does not deviate significantly, the cross-section of soft losses of functionality grows on average by the factor of 2.75. In this way, the augmentation of system observations by continuous current consumption monitoring can improve system error diagnostics and increase the quality of the test.

TABLE II
TOTAL FAILURE CROSS-SECTION BEFORE AND AFTER THE INCLUSION OF CURRENT CONSUMPTION OBSERVATION.

Criticality		**Failure cross-section, [cm^2/system]**			
		SUT1	**SUT2**	**SUT3**	**SUT4**
Transp. to the system	Before	$7.40 \cdot 10^{-11}$	$8.48 \cdot 10^{-11}$	$7.49 \cdot 10^{-11}$	$7.58 \cdot 10^{-11}$
	After	$7.76 \cdot 10^{-11}$	$1.02 \cdot 10^{-10}$	$7.17 \cdot 10^{-11}$	$8.28 \cdot 10^{-11}$
Soft loss of functionality	Before	$8.39 \cdot 10^{-11}$	$9.74 \cdot 10^{-11}$	$9.20 \cdot 10^{-11}$	$1.00 \cdot 10^{-10}$
	After	$2.29 \cdot 10^{-10}$	$2.89 \cdot 10^{-10}$	$2.56 \cdot 10^{-10}$	$2.53 \cdot 10^{-10}$

Certain events that were observed in the evolution of current consumption cannot be correlated with the events seen through the software observations. For example, the recorded waveforms contain features that can be characterized by a sudden decrease of supply current by around 1 mA, with a subsequent return to the previous current value after several minutes of operation (Fig. 4). These events cannot be caused by the normal functionality of the SUTs since no changes to their configuration were applied, and the tested systems cannot independently enter a different mode of operation, impacting the drawn current. Considering the constant exposure of the SUTs to the neutron beam, these events can be the signatures of radiation-induced SEEs. Such events would be transparent to the system operation and not result in any changes in data collected with software. Nevertheless, their detection and analysis are important to determine the most sensitive components of the system.

In the case of events classified as soft losses of functionality, although grouped as a single failure mode based on the software-recorded data, two separate types can be distinguished based on the changes in current consumption (Fig. 5). For each SUT, the decreases in current consumption were either by around 1 mA or 8 mA, and in both cases the functionality of the SUT could be restored by system reconfiguration. Although such behavior is not significant as far as the criticality class is concerned, these events might reveal a partial loss of the system functionality, that is either not actively involved in the current implementation or is not properly covered by the implemented software observations. This can be used as a source of additional feedback on the quality of the test procedure.

IV. CONCLUSIONS

In this study, a new approach to SUT observation during system-level radiation testing of electronic systems was implemented and tested. By means of enhanced system observability, the range of failure modes of four tested SUTs was determined. All observed failures were assigned to different criticality classes and correlated with the current consumption of each SUT.

The studied case has demonstrated that the initial assumptions about the criticality of the observed failures can be erroneous, which would be, in the best case, revealed during the data post-processing, or otherwise lead to the wrong conclusions about the system SEE sensitivity. However, the current consumption information can be used to adjust the classification of system failures during the performed test, therefore improving its quality. Current consumption monitoring can be used as a method to identify system malfunctioning, however, by itself it has a very limited capacity to trace down the elements of the SUT responsible for the observed

REFERENCES

[1] S. Guertin, "Lessons and Recommendations for Board Level Testing with Protons," *32nd Annual AIAA/USU Conference on Small Satellites*, August 2018

[2] T. Rajkowski, F. Saigné, V. Pouget, F. Wrobel, A. Touboul, J. Boch et al., "Analysis of SET Propagation in a System in Package Point of Load Converter," *IEEE Transactions on Nuclear Science*, vol. 67, no. 7, pp. 1494–1502, July 2020.

[3] M. Rousselet, P. C. Adell, D. J. Sheldon, J. Boch, H. Schone and F. Saigné, "Use and Benefits of COTS Board Level Testing for Radiation Hardness Assurance," *16th European Conference on Radiation and Its Effects on Components and Systems (RADECS)*, September 2016.

[4] R. García Alía, M. Brugger, F. Cerutti, S. Danzeca, A. Ferrari, S. Gilardoni et al., "LHC and HL-LHC: Present and Future Radiation Environment in the High-Luminosity Collision Points and RHA Implications," *IEEE Transactions on Nuclear Science*, vol. 65, no. 1, pp. 448-456, January 2018.

[5] A. Thornton, "CHARM Facility Test Area Radiation Field Description," *CERN-ACC-NOTE-2016-12345*, specification document, CERN, April 2016.

[6] C. Cazzaniga, M. Bagatin, S. Gerardin, A. Costantino and C. D. Frost, "First Tests of a New Facility for Device-Level, Board-Level and System-Level Neutron Irradiation of Microelectronics," *IEEE Transactions on Emerging Topics in Computing*, vol. 9, no. 1, pp. 104–108, March 2021.

[7] A. De Bibikoff and P. Lamberbourg, "Method for System-Level Testing of COTS Electronic Board Under High-Energy Heavy Ions," *IEEE Transactions on Nuclear Science*, vol. 67, no. 10, pp. 2179–2187, October 2020.