HAL open science

Stability of DC link with reduced energy storage for regenerative synchronous drive - Analytical approach

Nicolas Roux, Frédéric Richardeau

To cite this version:

Nicolas Roux, Frédéric Richardeau. Stability of DC link with reduced energy storage for regenerative synchronous drive - Analytical approach. EPE 2007 Conference, Sep 2007, Aalborg, Denmark. pp.0. hal-04044823

HAL Id: hal-04044823

https://hal.science/hal-04044823v1

Submitted on 24 Mar 2023

HAL is a multi-disciplinary open access archive for the deposit and dissemination of scientific research documents, whether they are published or not. The documents may come from teaching and research institutions in France or abroad, or from public or private research centers.

L'archive ouverte pluridisciplinaire **HAL**, est destinée au dépôt et à la diffusion de documents scientifiques de niveau recherche, publiés ou non, émanant des établissements d'enseignement et de recherche français ou étrangers, des laboratoires publics ou privés.

Open Archive TOULOUSE Archive Ouverte (OATAO)

OATAO is an open access repository that collects the work of Toulouse researchers and makes it freely available over the web where possible.

This is an author-deposited version published in: http://oatao.univ-toulouse.fr/
Eprints ID : 11738

To cite this version : Roux, Nicolas and Richardeau, Frédéric *Stability of DC link with reduced energy storage for regenerative synchronous drive - Analytical approach.* In: EPE 2007 Conference, 2 September 2007 - 5 September 2007 (Aalborg, Denmark).

Any correspondance concerning this service should be sent to the repository administrator: staff-oatao@listes-diff.inp-toulouse.fr

Stability of DC link with reduced energy storage for regenerative synchronous drive - Analytical approach

Nicolas Roux and Frédéric Richardeau
Laboratoire Plasma et Conversion d'Energie
UMR CNRS - INP - UPS 5213
2, rue Charles Camichel - BP 7122
31071 Toulouse Cedex 7, France
Tel.: +33 / (0) – 5 61 58 82 08.
Fax: +33 / (0) – 5 61 63 88 75.
E-Mail: nicolas.roux@laplace.univ-tlse.fr, frederic.richardeau@laplace.univ-tlse.fr
URL: http://www.laplace.univ-tlse.fr

Keywords

Regenerative power, Variable speed drive, Power cycling, DC power supply

Abstract

The purpose of this paper is to present an analytical approach in order to minimize the energy storage of a DC bus composed of a source, a filter and a load to estimate the influence of all parameters (operating point, control …) on the stability. The model of a real load, constituted by a PWM voltage inverter connected to a permanent magnet synchronous drive is developed.

Introduction

Adjustable speed drive have become common in industrial environment to control processes which power can range from a few hundreds to million of watts. They are commonly supplied by a diode bridge connected to the grid and a capacitor on the DC bus. But applications more and more often allow power reversibility. It can be transient (deceleration, electrical braking, quick stopping, rapid cycling) or continuous (driving load) or energy injection (wind turbine, photovoltaic plant). So the power supplier must accept some reversibility. One common solution for transient reversibility is the use of a braking resistor but the energy must be dissipated which can be difficult in an integrated system.
Another solution is to have a regenerative line converter. Moreover, if this reversibility is instantaneous, the DC filter can be favourably reduced allowing a smaller and less expensive device. Consequently, active front ends solutions allowing regenerative operation have become commercially attractive. The most common device is the voltage source inverter (VSI). Its impact on the DC-link capacitance has already been well documented [1][2]. It appears that a load impact is the most restricting factor because the rectifier voltage control has the slowest loop of the entire system.
But these devices have some drawbacks. They are more expensive (necessity of a EMC filter and line inductors) and less reliable (use of different sensors and an external digital control) than a standard diode bridge.
We have developed a new self-commutated device which combines the simplicity and the low cost of the diode bridge with an instantaneous reversibility [3]. Regarding waveforms, it operates like a three-phase diode bridge, equipped with current reversible diodes. It operates in continuous conduction whatever is the sign or the value of the DC current (even if it is null) [3]. One of this solution benefits is the instantaneous reversibility that allows high DC current dynamic, only limited by the line impedance.

So we can go further in the decrease of the DC capacitance. But stability problems will occur. This article deals with a study to determine the minimum capacitor value possible without destabilizing the DC voltage. We will use an analytical approach in order to check what are the main parameters involved in the stability of the DC voltage. After the presentation of a model of our new regenerative rectifier, two cases will be tackled. First, a constant power load often used in that type of study will be developed. Then a more realistic one consisting of a permanent magnet synchronous motor supplied by variable frequency VSI will be examined.

Rectifier model and schematic used for the study

As said above, the regenerative diode bridge may be seen like a three-phase diode bridge, equipped with current reversible diodes. Figure 1 presents a typical association with a regenerative bridge connecting the AC network to a load through a LC filter. The regenerative device schematic has been simplified to not overload the figure. For more details, refer to [3].

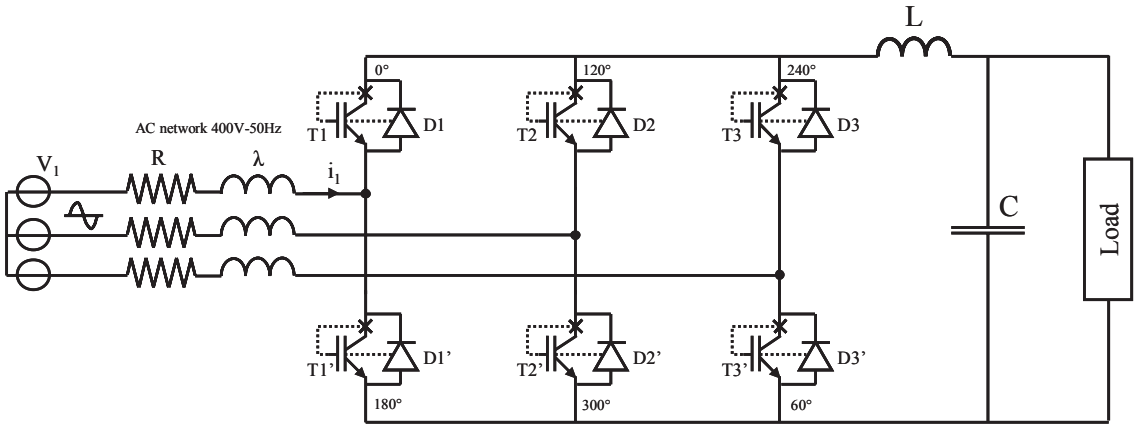

Fig. 1: Supply of a DC load from the AC network through the new regenerative rectifier and a LC filter

Figure 2 presents experimental waveforms for both modes on AC side. We can see that current waveform is typical of voltage rectifier (120° conduction). Moreover, it can be in phase (classical rectifier mode) or in opposite phase (regenerative mode) with the network voltage, allowing a power flow in both ways. We can also notice that during a conduction phase, the current can be positive and negative showing the instantaneous current reversibility of the device.

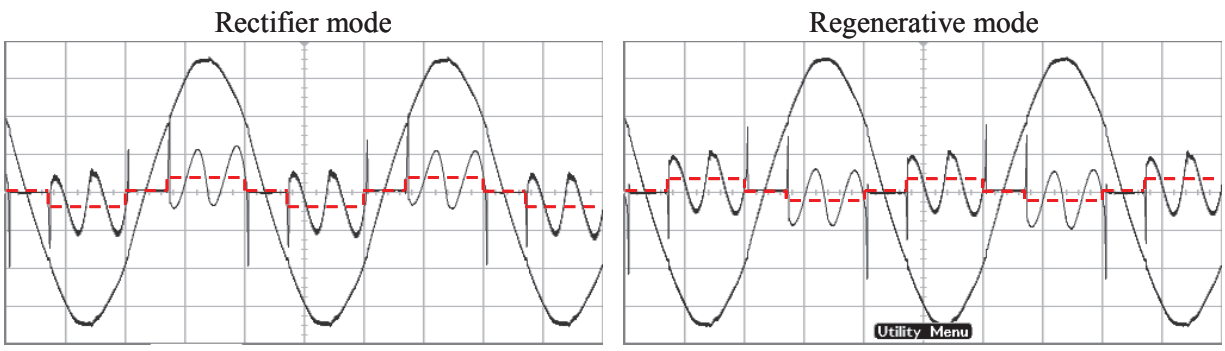

Fig. 2: AC Waveforms in both modes (voltage V_1 (100V/div) and line current i_1 (10A/div))

It confirms the similarity of behavior between our regenerative rectifier and a diode bridge with current reversible diodes even if they do not exist. For a low overlapping operation, we propose a linear DC model used to represent a three-phase diode bridge connected to the AC network for our device. It is shown in figure 3. We have an equivalent DC source which represents the mean value of the DC bus with no load. Then there is the line impedance composed of the wire resistance and an inductance. There are always two phases in series (explaining the factor two) except during overlapping which has a small duration. But this latter has an impact on the value of the DC voltage according to the load current. The relationship between voltage drop and current is linear if the overlapping duration is limited, which is often the case in applications connected to the network. So, we can simulate the overlapping effect with a non dissipative resistor ($R_{overlap}$). Its value is given by (1).

$$R_{overlap} = \frac{3}{\pi}\lambda \cdot \omega \tag{1}$$

We can also add a voltage source (V_{drop}) to represent the voltage drop in conducting components. Its sign depends on the DC current sign. For example, if the power flow comes from the network, the current goes through two diodes, so V_{drop} represents two diode voltage drops and is positive. In the other case, V_{drop} is negative and its value is twice the voltage drop of one transistor. If the load current never changes of sign during operation, V_{drop} is constant and a non factor in the study.

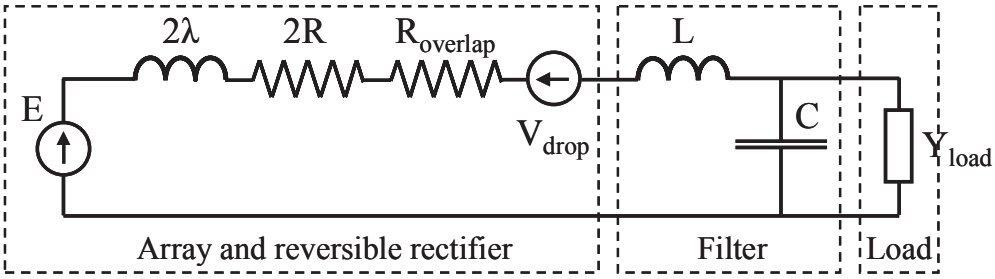

Fig. 3: Model of the studied assembly

Our device is associated with a filter and a load. This latter will be represented by its complex admittance Y_{load}. We can notice that the model is current reversible contrary to a diode bridge because our device always operates in continuous conduction.

The study will focus on power exchanges. These phenomenons have low frequencies, contrary to switching harmonics that are normally absorbed by the filter. So we can use small signal models (Figure 4) around an operating point. To determine the influence of the many parameters involved, an analytical study will be conducted. The variation of the voltage across the load (ΔV) will be evaluated when there is an evolution of the source voltage (ΔE_0). All inductors, resistors or voltage sources connected in series are grouped together (2).

$$\begin{cases} L_0 = L + 2\lambda \\ R_0 = 2R + R_{overlap} \end{cases} \tag{2}$$

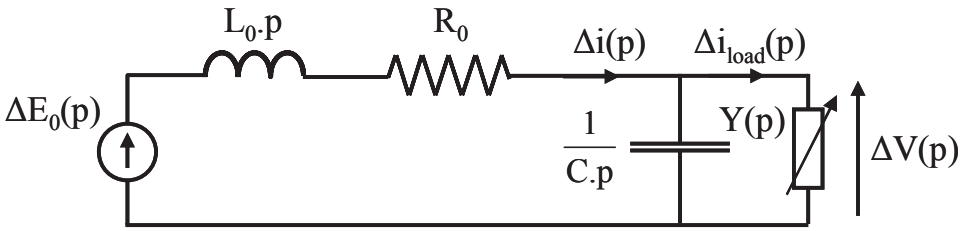

Fig. 4: AC Small signal model

Stability study

We have mainly focused on absolute stability criterions: Routh-Hurwitz and pole location. They also give different indications. The first one allows a quick parametric study comparing the influence of different parameters while the other one allows an estimation of the relative damping of the system (ratio of the imaginary and real parts of the poles).
Both criterions will be used to determine stability conditions on the elements of the filter according to the network and load values. They actually are the elements that we can change because load features are often set by the specifications.

Two different loads will be considered: a constant power load and a more realistic voltage inverter connected to a synchronous motor.

Constant power load

Contrary to the majority of loads which have constant impedance, static converters perform like constant power load because of their control loops. To study the impact of such a type of load, we can assume that our load is a perfect constant power load. It is the common example used to show the possible instability of the assembly [4].

Such device presents an electrical characteristic shown in figure 5. The equivalent admittance Y in the small signal model is given by (3) with V_{bus} and I_{bus} the operating point of the load.

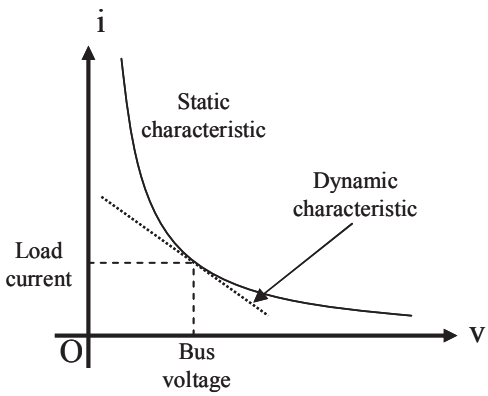

Fig. 5: Static characteristic of the constant power load

$$\widetilde{Y}_{load} = \frac{1}{R_{eq}} = -\frac{I_{bus}}{V_{bus}} \tag{3}$$

The device behaves like a negative resistor (R_{eq}) which, associated with the second order filter, can run like a possible oscillator. We can write the equation representing the evolution of the load voltage variation (4). We can extract the characteristic equation. It is a second order one. The required condition to have a stable system is a positive damping coefficient. It leads to the inequality (5) which will be called condition of stability.

$$\Delta E_0(p) = \left(\left(1 + \frac{R_0}{R_{eq}} \right) + \left(R_0 \cdot C + \frac{L_0}{R_{eq}} \right) \cdot p + L_0 \cdot C \cdot p^2 \right) \cdot \Delta V(p) \tag{4}$$

$$\left| R_{eq} \right| > \frac{L_0}{R_0 . C} \tag{5}$$

We can plot an abacus representing unstable and stable zone in the L_0-C plan, base on (5). It is parameterized according to the equivalent load resistor *i.e.* the power drained by the load. The load is actually supplied by a voltage source. So we can assume that the load voltage is almost constant when the absorbed power changes. If the power increases with constant voltage, it leads to an increase of current, reducing the absolute value of the equivalent resistance according to (3).

Figure 6 represents one example of abacus. We can see that increasing the capacitor value stabilizes the system contrary to an increase of the inductor value. We can also notice that the more power the load dissipates the smaller is the stable zone.

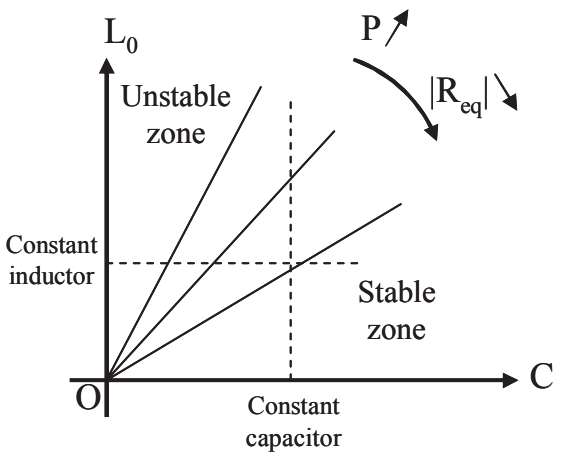

Fig. 6: Stability area in the L_0(C) plan

This example allows a first look to determine the destabilizing effect of the inductance in series contrary to the capacitor in parallel. It also shows the impact of the absorbed power. But a true constant power load does not exist, because it implies that control loops have infinite pass-band which is impossible because there is at least the limitation by the switching frequency. So we will now focus on a more realistic load taking all the different dynamics into consideration.

AC drive

We now consider the power dynamic of the load. This latter consists of a PWM voltage inverter connected to a PM synchronous drive. A dq control with compensation loops is used. The schematic is given in figure 7. We can notice the presence of compensation loops.

The motor parameters are stator resistance R_S, self-inductances in dq axes, L_d and L_q and the number of pairs of poles n_p. The mechanical speed is noted Ω and the magnetic flux created by the inductor is Φ_f. (6) gives the basic equations of the PM synchronous motor in the dq reference.

$$\begin{cases} V_d = R_s.i_d - n_p.\Omega.\Phi_q + \dfrac{d\Phi_d}{dt} \\ V_q = R_s.i_q + n_p.\Omega.\Phi_d + \dfrac{d\Phi_q}{dt} \\ \Phi_d = L_d.i_d + \Phi_f \\ \Phi_q = L_q.i_q \end{cases} \tag{6}$$

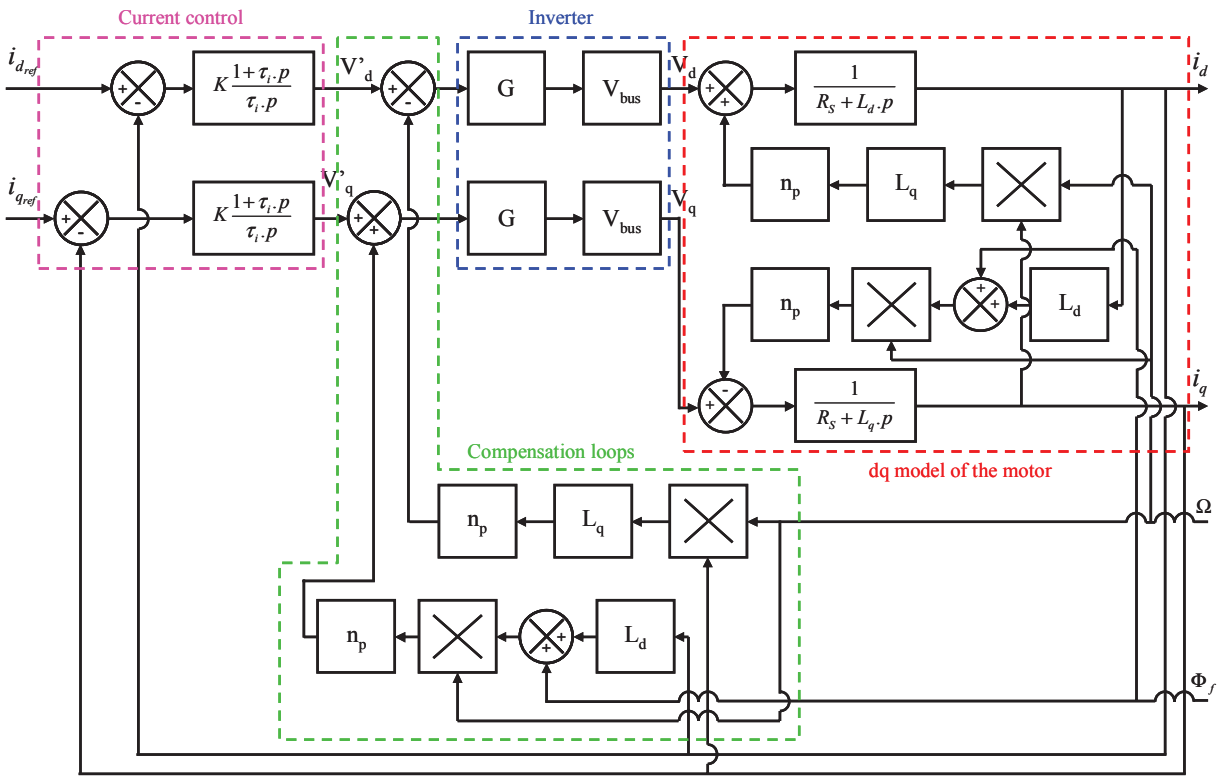

Fig. 7: Schematic of the dq control of the synchronous motor

Figure 8 shows the different steps followed in order to study the stability of the system in relation to different parameters. The main point is the determination of equivalent load admittance around an operating point by linearization.

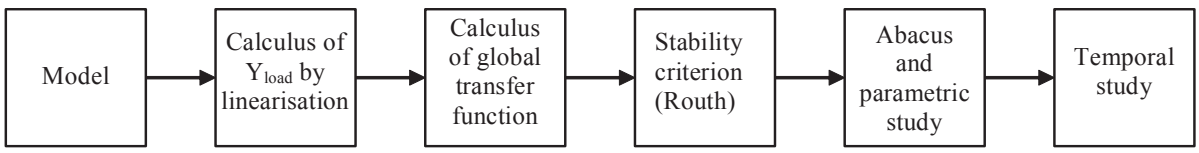

Fig. 8: Steps in the stability study

To calculate Y_{load}, we assume that the inverter has no loss and we use a permanent magnet synchronous motor. It leads to the expression (7). The admittance has many parameters but we can classify them in three main categories:

- Physical parameters like resistor windings or self-inductance (values given in Table I)
- Control parameters: calculus of the PI regulator (K, τ_i)
- Operating point where the linearization is made (V_{bus0}, I_{bus0}, V'_{d0}, V'_{q0}, i_{d0}, i_{q0})

$$
\begin{aligned}
Y_{load} = & \frac{1}{V_{bus0}.(L_S.\tau_i.p^2 + (K.G.V_{bus0} + R_S).\tau_i.p + K.G.V_{bus0})} \times \\
& \Big\{\big(G(V'_{d0}.i_{d0} + V'_{q0}.i_{q0}) + G.n_p.\Omega.\Phi_f.i_{q0} - I_{bus0}\big).L_S.\tau_i.p^2 + \\
& \big(G.R_S(V'_{d0}.i_{d0} + V'_{q0}.i_{q0}) + G^2.V_{bus0}.(V'^2_{d0} + V'^2_{q0}) + G.n_p.\Omega.\Phi_f.R_S.i_{q0} + \\
& G^2.V_{bus}.n_p.\Omega.(L_S.(V'_{q0}.i_{d0} - V'_{d0}.i_{q0}) + \Phi_f.(2V'_{q0} + n_p.\Omega.(\Phi_f + L_S.i_{d0}))) \\
& - I_{bus0}.(R_S + K.G.V_{bus0})\big).\tau_i.p \\
& G.K.V_{bus0}.I_{bus0}\Big\}
\end{aligned}
\tag{7}
$$

To check this analytical expression of the admittance, we compare Bode diagrams of Y_{load} and of the simulation of the complete assembly (Fig. 9). We see that the analytical expression have the same behavior than the complete assembly. It allows us to use it to study the influence of all these parameters on the stability of the system.

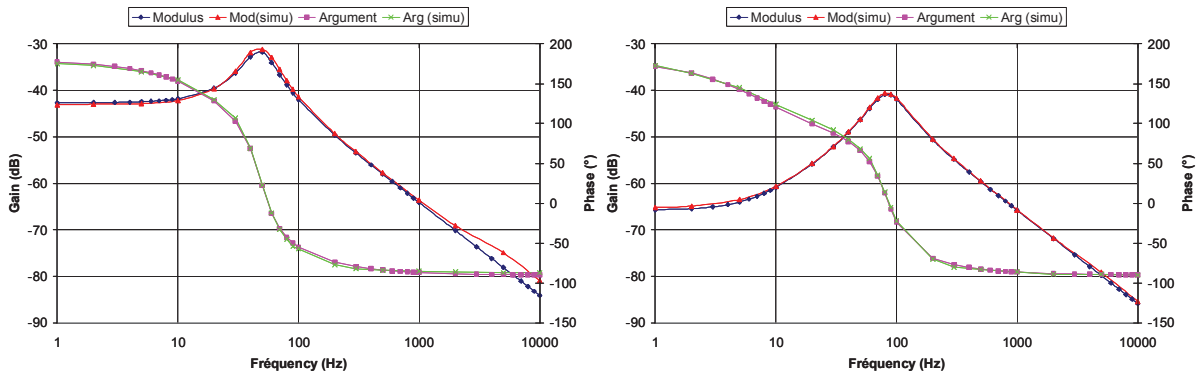

Fig. 9: Bode Diagram for load admittance (analytical and simulated) for two different operating points and two values of the PI regulator

But the complexity of the analytical expression of Y_{load} causes a problem. Associated with the second order filter, we will have a fourth order characteristic equation with more than ten parameters. An attempt to write here the global expression or a direct study is hardly possible.

To have a similar approach to the precedent case of a constant power load, we are going to study the influence of the L_0C filter on the stability with other parameters supposed constant. These latter can be changed to see their influence.

Table I: Parameters of the motor

Parameter	Value
L_d	41.59mH
L_q	41.59mH
R_S	3.3Ω
n_p	3
Φ_f	0.4832Wb

First, we use the pole location to check the results of the precedent study: an increase in capacitor value stabilizes the system contrary to an increase in the value of the inductor in series. Figure 10 presents two graphics. In both cases, the load is identical and only one value of the LC filter is modified. The order of the system is four so we find two pairs of conjugate complex poles. One seems independent of the LC filter, because a variation in L_0 or C does not contribute a variation of these poles always stable. On the other hand, the other poles can have a positive real part, leading to an unstable system.

Figure 10(a) is plotted with L_0=400µH and a capacitor value between 1µF and 1mF.We can observe the poles with positive real part corresponding to the values 1µF and 2µF. The latter is close to the imaginary axis. It corresponds well to the stability condition determined with the Routh-Hurwitz criterion which determines that the system is stable if the capacitor value is above 2.105µF.

Two simulations are presented in Figure 11 in the same conditions than Figure 10(a) and with two different capacitor values, one above the stability condition and one under. We check the anticipated result well.

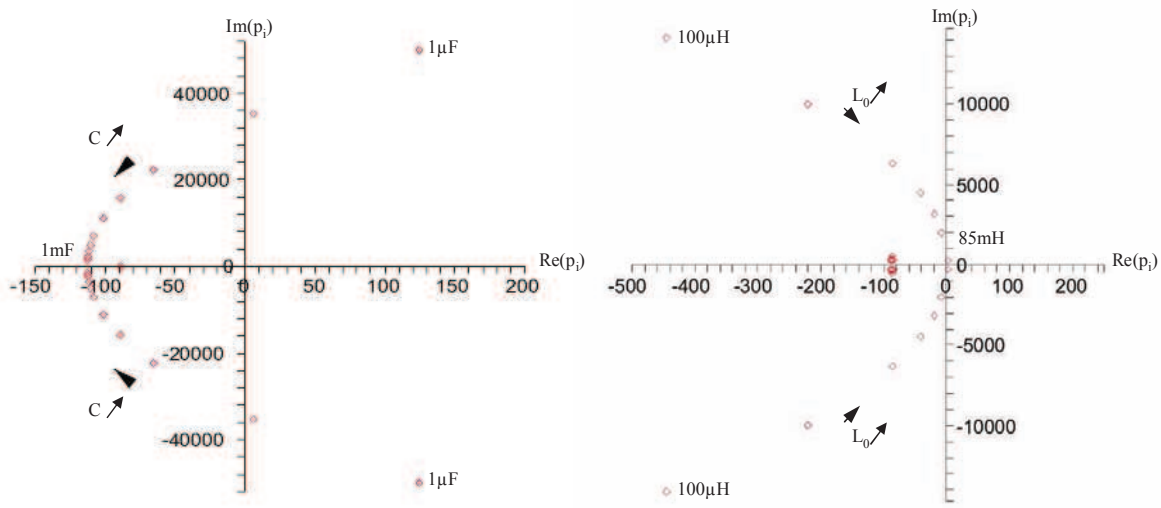

(a) L_0=400µH and C from 1µF to 1mF (b) C=50µF and L_0 from 100µH to 185mH

Fig. 10: Pole location with P=5kW according different values of the filter

We can also plot pole location with fixed capacitor and variable inductance. Figure 10 (b) is traced for C=50µF and the inductance varying between 100µH and 85mH. We see that the system becomes unstable with an inductance of 85mH. That joins the Routh-Hurwitz criterion which gives L0 < 82.55mH as stability condition.

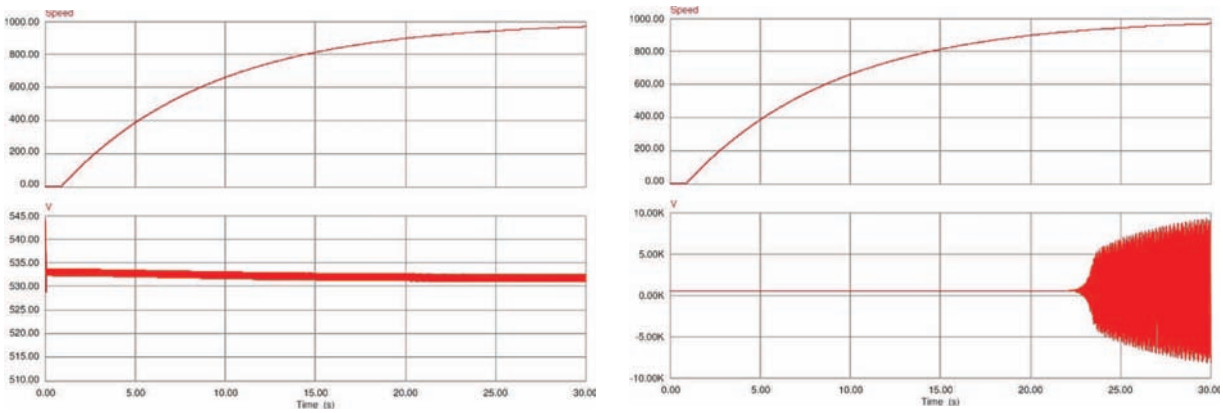

(a) Unstable case (C = 1µF) (a) Stable case (C = 3µF)

Fig. 11: Speed and DC voltage under constant torque for two different capacitor values and L_0=400µH

Above, either inductance or capacitor value should be fixed in the stability study. It is interesting to have parametric plan like Figure 6. Pole location does not allow this so we now focus on Routh-Hurwitz criterion. Figure 12 presents the various stable and unstable zones in different situations.

Figure 12 (b) has been plotted in the same conditions that the precedent study. Of total manner, inductance has a destabilizing effect while the capacitor tends to stabilize the assembly. However, an interesting phenomenon appears: for a low capacitor value, when the inductance value increases, the assembly becomes unstable. If the inductance value keeps increasing, the assembly becomes again stable. For example, for a 10µF capacitor, the Routh-Hurwitz criterion predicts that the system will be stable for L_0 included in]0; 2, 052mH[U]24, 32mH; 110, 8mH[.

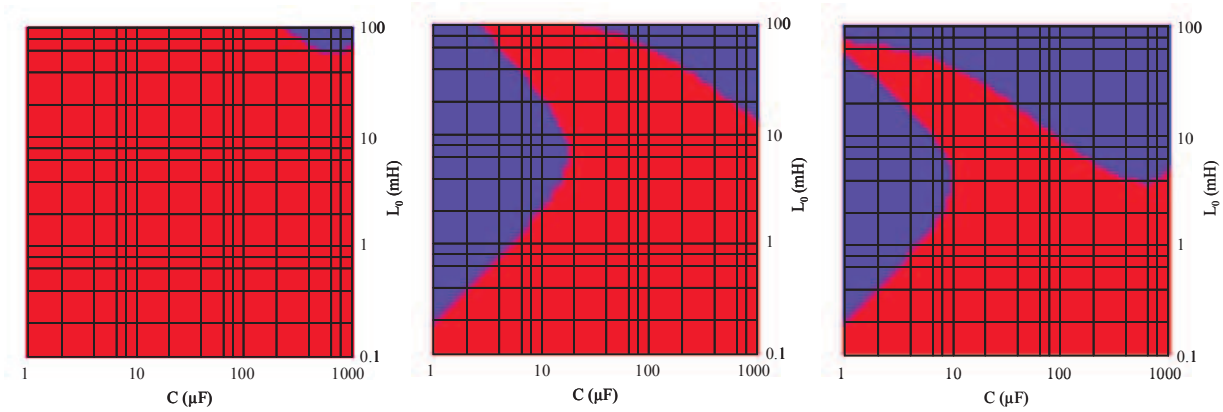

(a) P=1kW and K=5 (b) P=5kW and K=5 (b) P=5kW and K=30

Fig. 12: Stable (red) and unstable (blue) zone in a L_0-C parametric plan in different conditions (power and PI controller gain)

We can also carry out tests for a load power five times smaller (Figure 12 (a)). We note that the assembly is almost all the time stable in the same parametric space. This result is obviously dependent with the increase in equivalent resistance (phenomenon already observed with a constant power load).

We can also see the influence of a variation in the PI parameters. Figure 12 (c) presents an example with the gain K of the PI multiplied by six. The power absorbed by the load is 5kW like in Figure 12 (b). We note that the size of the stable zone has decreased. We can link it to the increase in the control pass-band. It tends to bring a more reactive and nervous system trying to counter any variation of the bus voltage. This behavior approaches constant power load. On the other hand, the slower (K=5) tends to soften reaction of the assembly against disturbances, thus stabilizing it.

Even if the parametric plans are more complex than in the constant power load case, we have some interesting results. First, we find again that an increase in inductance value destabilizes the system contrary to an increase of the capacitor value, even if it is no more automatic. We can also visualize the difference between the ideal constant power load and a more realistic one: the effect of the dynamic of the control. The lazier it is, the more stable the system will be. So the constant power load with its infinite pass-band represents a more restricting case.

Conclusion

The current trend in compactness and mass reduction comes through a decrease of the filter energy, allowed by the permanent conduction of our regenerative diode bridge. Moreover, with this device, the protection against default is better, thanks to the use of self-turn-off switches. But the reduce of the filter energy leads to more interactions between the supply and the load, which can result in a destabilization of the supply assembly.
So an analytical approach of the stability of a reduced energy storage DC link is presented, allowing the study of the influence of different parameters like values of the load control loops.

References

[1] Malesani L., Rossetto L., Tenti P., Tomasin P.: AC/DC/AC PWM converter with reduced energy storage in the DC link, IEEE Trans. on Ind. App. Vol 31 no 2, pp 287-292, 1995

[2] Klumpner C., Liserre M., Blaabjerg F.: Improved control of an active front-end adjustable speed drive with a small DC-link capacitor under real grid conditions, PESC 2004 Aachen, pp 1156-1162

[3] Roux N., Richardeau F., Foch H., Caritoux T., Ferrer D.: Self-switching and protected converters: application to the design of a self-breaking reversible rectifier, EPE 2003 Toulouse, paper 0379

[4] Morren J., de Haan S.W.H., Ferreira J.A.: (De-)stabilising effect of power electronic interfaced DG units in distribution networks, EPE 2005 Dresden, paper 0395