HAL open science

A self-sustained energy storage system with an electrostatic automatic switch and a buck converter for triboelectric nanogenerators

Hemin Zhang, Dimitri Galayko, Philippe Basset

To cite this version:

Hemin Zhang, Dimitri Galayko, Philippe Basset. A self-sustained energy storage system with an electrostatic automatic switch and a buck converter for triboelectric nanogenerators. 18th International Conference on Micro and Nanotechnology for Power Generation and Energy Conversion Applications, Dec 2018, Daytona Beach, Florida, United States. pp.012016, 10.1088/1742-6596/1407/1/012016 . hal-04031078

HAL Id: hal-04031078

https://hal.science/hal-04031078v1

Submitted on 6 Apr 2023

HAL is a multi-disciplinary open access archive for the deposit and dissemination of scientific research documents, whether they are published or not. The documents may come from teaching and research institutions in France or abroad, or from public or private research centers.

L'archive ouverte pluridisciplinaire **HAL**, est destinée au dépôt et à la diffusion de documents scientifiques de niveau recherche, publiés ou non, émanant des établissements d'enseignement et de recherche français ou étrangers, des laboratoires publics ou privés.

Distributed under a Creative Commons Attribution 4.0 International License

Journal of Physics: Conference Series

PAPER • **OPEN ACCESS**

A self-sustained energy storage system with an electrostatic automatic switch and a buck converter for triboelectric nanogenerators

To cite this article: Hemin Zhang *et al* 2019 *J. Phys.: Conf. Ser.* **1407** 012016

View the article online for updates and enhancements.

You may also like

- Waterwheel-inspired high-performance hybrid electromagnetic-triboelectric nanogenerators based on fluid pipeline energy harvesting for power supply systems and data monitoring
Mengying Lian, Jiaxin Sun, Dawei Jiang et al.
- From contact electrification to triboelectric nanogenerators
Zhong Lin Wang
- Output characteristics of series-parallel triboelectric nanogenerators
Xinsheng He, Huaiyi Zhang, Jiajie Jiang et al.

245th ECS Meeting
San Francisco, CA
May 26–30, 2024
PRiME 2024
Honolulu, Hawaii
October 6–11, 2024
Bringing together industry, researchers, and government across 50 symposia in electrochemistry and solid state science and technology
Learn more about ECS Meetings at
http://www.electrochem.org/upcoming-meetings
Save the Dates for future ECS Meetings!

This content was downloaded from IP address 84.102.215.7 on 06/04/2023 at 09:39

A self-sustained energy storage system with an electrostatic automatic switch and a buck converter for triboelectric nanogenerators

Hemin Zhang[1], Dimitri Galayko[2] and Philippe Basset[1]
[1]Université Paris-Est, ESYCOM, ESIEE Paris, France
[2]Sorbonne Universités, LIP6, France

E-mail: 1989hemin@gmail.com

Abstract. In this paper, we present for the first time a complete energy harvesting system for triboelectric nanogenerators (TENGs) that includes as a first stage a half-wave rectifier, and as a second stage an electrostatic automatic switch combined with a buck converter. This simple two-stage system allows to deal with the very high output voltages of TENGs: the system can power a commercial low-voltage output regulator, which cannot be realized by directly charging the storage capacitor only with diode rectifiers. Different from the previous works using dissipating transformers for voltage stepping-down or switches integrated with the TENG for impedance matching, this work demonstrates the properties of high power pumping up, potential size reduction and low power dissipations.

1. Introduction

During the past two decades, there has been a great increasing interest in Kinetic Energy Harvesters (KEHs) that scavenge vibration energy from the ambient environments, with the development of the wireless sensing nodes, wearable electronics and Internet of Tings (IOT). There have been many kinds of KEHs like electrostatic electret harvesters [1], piezoelectric harvesters [2], thermoelectric harvesters [3] and triboelectric nanogenerators [4]. Among them, triboelectric nanogenerators (TENGs) attract more and more attentions. The operation of the TENGs are based on the coupling principles of *contact electrification* and *electrostatic induction*. The classical contact-separate mode of TENGs consists in the physical contact of two materials with different abilities to attract electrons. Opposite charges are left on the surfaces of the two materials and a current will take place from one electrode to another to rebalance the electrostatic field, when the transducer's capacitance changes with each other with external mechanical forces. TENGs usually generate a high voltage impulse output with a peak above 100 V, however the generated energy per cycle (or power) is not always high enough to power an electronic device. Efficiently management and storage of energy under such a high voltage is one of the main challenges in the TENGs design.

Simplest, the impulse voltage is rectified using a half-wave or a full-wave rectifier to charge a capacitor that drives the electronics. However, there is a great energy loss on the energy transfer from the TENG to the storage capacitor, as the internal capacitance of the TENG is much smaller than that of the external storage capacitor. In order to improve the efficiency and suppress the energy transferring loss, *Niu* et al. [5] has realized a two-stage charging system that firstly charges to the optimized voltage a small buffer capacitor matching the impedance of the TENG, and then transfers

Content from this work may be used under the terms of the Creative Commons Attribution 3.0 licence. Any further distribution of this work must maintain attribution to the author(s) and the title of the work, journal citation and DOI.
Published under licence by IOP Publishing Ltd

the energy to a larger reservoir using *two electronic switches and a transformer*. However, the electronic switches and the transformer are quite power-consuming, weakening the efficiency improvement. Furthermore, the transformer is large in volume and weight. In this paper, we propose for the first time a two-stage charging system with an *electrostatic automatic switch* and a DC-DC *buck converter*, which considerably increases the charging efficiency and has the potential to be fully integrated.

2 Experimental setup and results discussion

2.1 Schematic and experimental setup

As shown in Figure 1, the 1st stage of the proposed energy storage system is a half-wave rectifying module. A small buffer capacitor (C_{buf} = 5nF) is quickly charged by the TENG to a high-voltage (~200 V). The TENG used here was firstly reported in [6]. It is constructed by a triangular-shaped conductive polyurethane foam (C-PUF), a 50 µm-thick polytetrafluoroethylene (PTFE) film and an aluminium film tape. The C-PUF plays the roles of electrode, space, spring, and friction material. A fabricated device with dimensions of 6×6×1 cm^3 can be seen in Figure 1b. The TENG was placed under a vibration shaker where the vibration frequency and amplitude/force can be controlled with a signal generator. A peak open-circuit voltage of ~102 V and a peak short-circuit current of 2.2 µA were obtained when the TENG was periodically pressed with a 5 Hz, 10 N-peak force. Compared to the full-wave rectifier, the half-wave diode bridge supplies a higher saturated voltage [7], although it requires a longer time to get saturated. A higher voltage leads to a higher energy per cycle (power) [8], therefore in this paper the half-wave rectifier is employed to rectify the impulse voltage generated by the TENG.

The 2nd stage includes an electrostatic automatic switch (EAS) and an LC buck converter. The schematic of the automatic switch is shown in Figure 1c, which is constructed by a *copper wire* as the mobile electrode (Elect-1), a fixed aluminium plate (Elect-2), and a micro-positioning platform to control the gap between Elect-1 and Elect-2. This gap is the key parameter defining the pull-in (switching ON) voltage of the EAS. Elect-1 is connecting to C_{buf} (Node M), and Elect-2 is connecting to the DC-DC buck converter (Node N). The inductor of the buck converter is 100 mH, and the storage capacitor (C_{store}) is 10 µF. All the diodes in Figure 1 are double in series to enhance the break-down voltage up to 500 V. The voltage across C_{store} is used to drive a commercial regulator (LTC3588-1), while the output of the regulator is connected to an oscilloscope via a 1 MΩ probe.

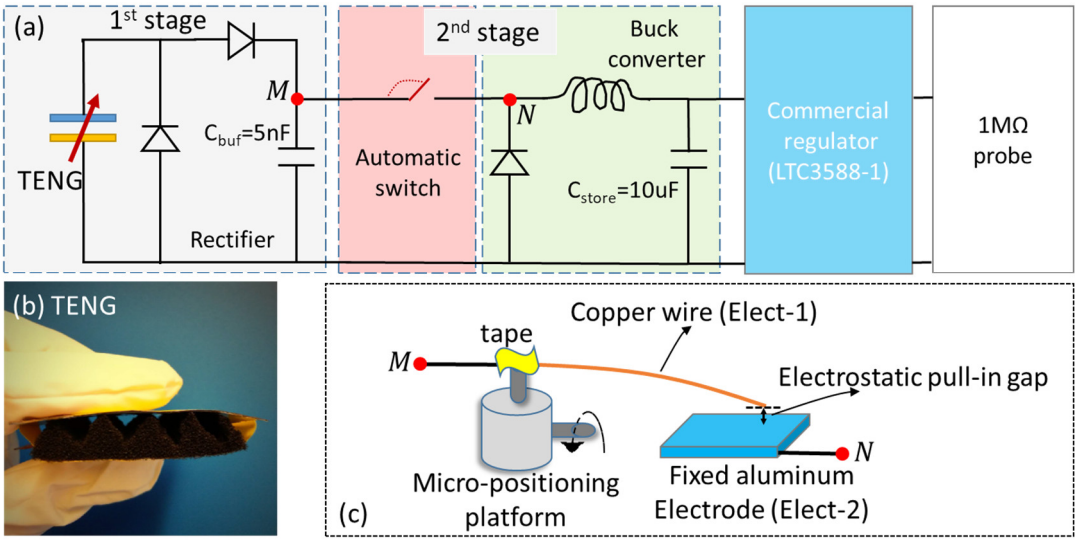

Figure 1. Description of the system. (a) Schematic of the self-sustained energy harvesting system, (b) Photo (side view) of the TENG, (c) Principle and setup of the electrostatic switch.

2.2 Results and discussions

The measured voltage across C_{buf} (V_{Cbuf} at Node M) is shown in Figure 2a, with a zoom-in in Figure 2b. V_{Cbuf} is slowly increasing to ~190 V when EAS is OFF, reaching the pull-in voltage of the EAS that turns ON. V_{Cbuf} quickly drops to ~0 V while charging C_{store} through the inductor. The switching ON-time is 0.23 s and the switching OFF-time is 2.1 s, indicating a switching frequency of 0.43Hz (Figure 2b).

The voltage across C_{store} (V_{Cstore}) and the output of the regulator are shown in Figure 2c. There are also voltage up-down oscillations for V_{Cstore}. This voltage increase is due to the charge accumulation transferring from C_{buf} when EAS is ON, while the voltage decrease is caused by the power consumption of the commercial regulator and the output load (the 1 MΩ testing probe). As shown by the red line in Figure 3c, the output of the regulator is initially 0V, and has a short starting-up oscillation when V_{Cstore} approaches 4.5V. This phenomenon is attributed to the inherent characteristic of the commercial component. The output finally stands at 3.3V after 35 s.

To evaluate the harvested energy or power quantitatively, the *energy per cycle* in C_{store} is calculated, based on the formula: $\Delta E_{cyc} = C_{store}(V_{n+1}^2 - V_n^2)/2$, where V_{n+1} and V_n represent V_{Cstore} at the $(n+1)^{th}$ and n^{th} cycle. The calculated energy per cycle in C_{store} is shown in Figure 2d. Because the energy flows in C_{store} is discontinuous based on the switch state ON or OFF, the calculated curve of the energy per cycle includes a negative component (no energy flows into C_{store} corresponding to the OFF-state duration), and a positive component (energy flows into C_{store} corresponding to the ON-state duration). The positive value in Figure 2d represents the harvested energy in C_{store} (ΔE_{harv}) minus the consumed energy (ΔE_{cons}) by the load (regulator plus probe). The negative value is equal to the consumed energy. We obtained from the figure that during normal operation (when the switching occurs at 200 V): $\Delta E_{harv_peak} - \Delta E_{cons_peak} \approx 1\mu J$, and $\Delta E_{cons_peak} \approx 0.7\mu J$, thus the finally harvested energy per cycle of C_{store} is 1.7 μJ, corresponding to a power of 8.5 μW.

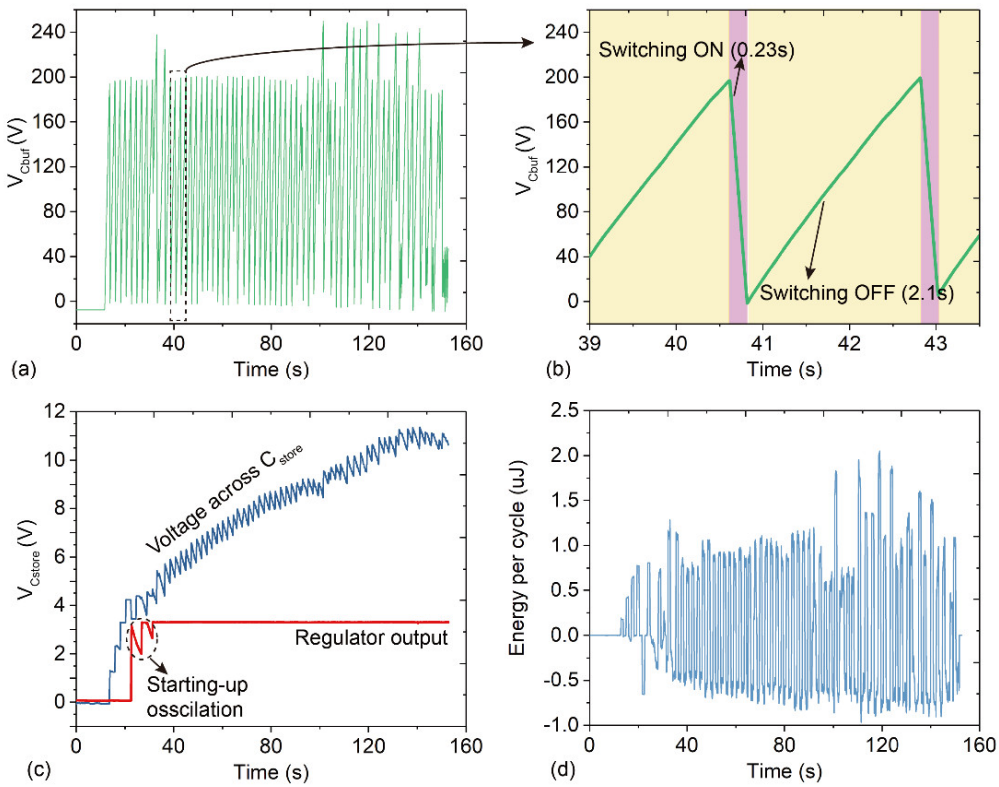

Figure 2. Electrical performance of the energy storage system. Voltage across C_{buf} (Node M) (a) and its detailed view (b) versus time. Voltage across C_{store} (V_{Cstore}) (c) and the calculated energy per cycle in C_{store} (d).

As a comparison, we also did experiments using only a half-wave rectifier with C_{store} =10 μF to drive the same regulator, without EAS and buck converter, as shown in Figure 3a. Firstly, we compared to the proposed two-stage method as aforementioned. The voltage across C_{store} grows much slower (between Figure 2c and 3b). Secondly, the commercial regulator cannot be sustained by the voltage across C_{store}, as the output of the regulator is quickly dropping to 0V once it reaches 3.3 V. This means that the proposed two-stage method can considerably improve the energy storage efficiency.

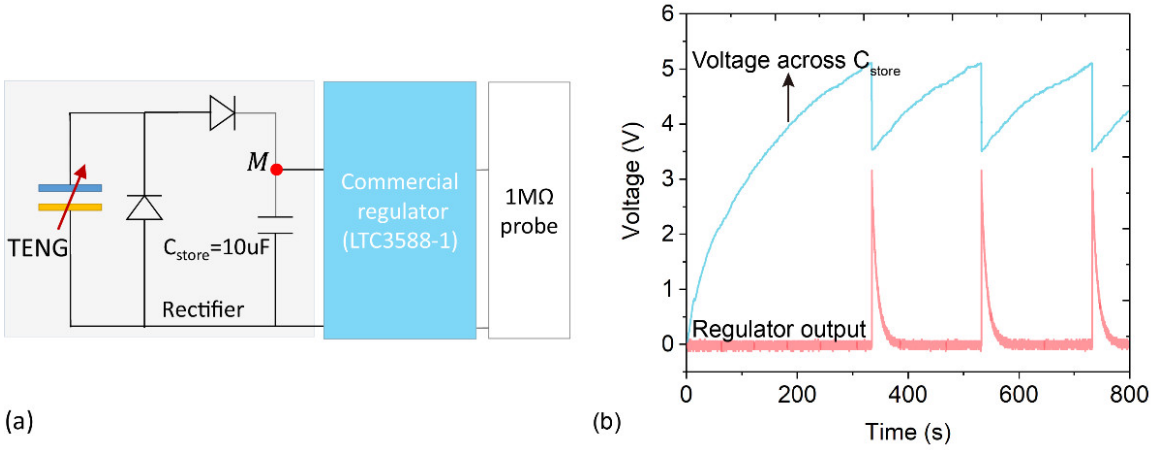

Figure 3. Using a normal half-wave rectifier without switch and buck converter to drive the regulator. Experimental setup (a), and voltage across C_{store} as well as output of the regulator (b).

3. Conclusion

In summary, we proposed and demonstrated a two-stage energy storage system with electrostatic automatic switch and DC-DC buck converter. A smaller buffer capacitor was firstly charged to a high voltage, leading to the pull-in (switching-ON) of the electrostatic switch. Then the harvested energy in the buffer was transferred to the storage capacitor via a buck converter. The application of the buffer capacitor eliminates the previously-existed huge energy loss caused by the impedance mismatch between the TENG and the storage capacitor. A commercial regulator can be sustained at a constant 3.3V output, using the proposed two-stage method, which cannot be realized with a classical diode-bridge rectifier. However, the reported automatic switch is only a proof of concept with imprecise manual control. In the future, we aim at a fully-integrated system using the microelectromechanical system (MEMS) technologies, to push this method forward in the practical applications.

References

[1]. Murotani K, Suzuki Y, *Journal of Micromechanics and Microengineering*. 1028, 28: 104001.
[2]. Song J, Wang Z L, *Science*. 2006, 312(5771): 242-6.
[3]. Jin L, Greene G W, MacFarlane D R, Pringle J M, *ACS Energy Letters*. 1(4):654-8.
[4]. Wang S, Lin L, Wang Z L, *Nano letters*. 2012, 12(12):6339-46.
[5]. Niu S, Wang X, Yi F, Zhou Y S, Wang Z L. *Nature communications*. 2015, 11(6): 8975.
[6]. Zhang H, Lu Y, Ghaffarinejad A, Basset P. *Nano Energy*, 2018, 51: 10-18.
[7]. Basset P, Blokhina E, Galayko D, John Wiley & Sons; 2016 Mar 3.
[8]. Ghaffarinejad A, Hasani J Y, Hinchet R, Lu Y, Zhang H, Karami A, Galayko D, Kim S W, and Basset P. *Nano Energy*. 2018, 51: 173-184.