HAL
open science

Sizing of a hybrid locomotive based on accumulators and ultracapacitors

Amine Jaafar, Bruno Sareni, Xavier Roboam, M. Thiounn

To cite this version:

Amine Jaafar, Bruno Sareni, Xavier Roboam, M. Thiounn. Sizing of a hybrid locomotive based on accumulators and ultracapacitors. IEEE Vehicle Power and Propulsion Conference (VPPC 2010), Sep 2010, Lille, France. 10.1109/VPPC.2010.5729131 . hal-03865578

HAL Id: hal-03865578

https://hal.science/hal-03865578v1

Submitted on 24 Mar 2023

HAL is a multi-disciplinary open access archive for the deposit and dissemination of scientific research documents, whether they are published or not. The documents may come from teaching and research institutions in France or abroad, or from public or private research centers.

L'archive ouverte pluridisciplinaire **HAL**, est destinée au dépôt et à la diffusion de documents scientifiques de niveau recherche, publiés ou non, émanant des établissements d'enseignement et de recherche français ou étrangers, des laboratoires publics ou privés.

Open Archive TOULOUSE Archive Ouverte (OATAO)
OATAO is an open access repository that collects the work of Toulouse researchers and makes it freely available over the web where possible.

This is an author-deposited version published in : http://oatao.univ-toulouse.fr/
Eprints ID : 9252

To link to this conference :
URL : http://dx.doi.org/10.1109/VPPC.2010.5729131

To cite this version : Jaafar, Amine and Sareni, Bruno and Roboam, Xavier and Thiounn-Guermeur, Marina. *Sizing of a hybrid locomotive based on accumulators and ultracapacitors.* (2010). In: IEEE Vehicle Power and Propulsion Conference (VPPC 2010), 1-3 Sep 2010, Lille, France.

Any correspondance concerning this service should be sent to the repository administrator: staff-oatao@listes-diff.inp-toulouse.fr

Sizing of a Hybrid Locomotive Based on Accumulators and Ultracapacitors

Amine Jaafar[1], Bruno Sareni[1], Xavier Roboam[1], Marina Thiounn-Guermeur[2]

[1]Université de Toulouse, LAPLACE, UMR CNRS-INPT-UPS (site ENSEEIHT), Toulouse, France
[2]SNCF-Direction de l'Innovation et la Recherche, Paris, France

{jaafar, sareni, roboam}@laplace.univ-tlse.fr, marina.thiounn@sncf.fr

Abstract — **In this paper, hybridization of a BB460000 locomotive is proposed integrating a reduced power diesel generator, batteries and ultracapacitors as storage elements. The power mission of the BB460000 locomotive is studied in order to analyze its ability to be hybridized and to identify the most critical mission. An energy management strategy based on a frequency sharing is proposed. It allows strongly decreasing the nominal power of the diesel generator. Then, through a power flow sizing model, the hybrid locomotive is sized with Ni–Cd batteries and ultracapacitors. The uselessness of ultracapacitors on energetic, geometrical, financial and lifetime plans is shown.**

Keywords – Battery, Energy management strategy, Energy storage, Hybrid locomotive, Ultracapacitor

I. INTRODUCTION

By comparison with aircraft and automotive systems, the railway transport is recognized as being a sustainable mode of transport with reduced carbon emissions. Indeed, most passenger trains, particularly in France, where 85% of all passenger trains are high speed-trains (i.e., TGV), are electrically fed [1]. However, for particular segments such as sorting and local sideboards in non-electrified railway areas, the driving missions are generally achieved by diesel locomotives. In such cases, the diesel engine operates more than 60% of time at slow motion [2], [3]. This leads to an excess of fuel consumption, polluting broadcasts and noise [4]–[7]. Diesel-electric hybridization then establishes an interesting solution before being completely "zero fuel" by means of new technologies of generators (fuel cells,…). It allows answering simultaneously economical and environmental objectives by reducing, on the one hand, fuel burn and on the other hand CO_2 emissions. Energy storage devices mostly used to hybridize diesel locomotives are accumulators, flywheels and ultracapacitors. "NewEnergy train (NE@Train)" [8] has been the first railway hybrid locomotive put on rails. This suburb train has been built by the Japanese company JR-EAST. It was composed of a diesel generator of 230 kW electric associated with a lithium-ion batteries of 10 kW [9]. It allows a 20% reduction of the fuel burn and 50% of polluting broadcasts compared to a full diesel locomotive. The Canadian company RailPower (RP) was the first railway builder producing hybrid locomotives assembling diesel and accumulator batteries in an industrial way [2], [3]. It has commercialized two groups of locomotives. The Green Goat group of sorting is based on a 200 kW diesel generator (against 1500 kW for an equivalent diesel locomotive) and a great pack of batteries (Pb-1200 Ah under 600 V DC). Two versions (RP20BH and RP20BD) embed two or three 500 kW diesel generators and batteries of the same technology.

In this context, the French national railways company (SNCF) and the LAPLACE Laboratory have been involved in the integrated design, i.e., architecture, sizing and energy management of an autonomous hybrid locomotive. A first application of the diesel-electric hybridization is based on a BB63000 diesel locomotive dedicated to carry out missions of sorting and local sideboards in absence of catenaries [1], [10]. Complementarily to the previous design and sizing, other missions are investigated in order to identify their hybridization potential. The current study proposed in this paper has the objective to size a second hybrid locomotive based on a BB460000 diesel locomotive with a smaller diesel engine, batteries and ultracapacitors. This locomotive is devoted to carry out missions of local sideboards. It is actually moved by four electric motors fed by a diesel generator of 1 MW.

This paper is organized as follows. In section II, the BB460000 locomotive missions are analyzed. Thus, the interest of a hybridization approach is proved and the most predominant mission which serves to size hybrid system is defined. In section III and section IV, the energy management strategy and the power flow sizing model are presented. Based on this model, the locomotive is sized with ultracapacitors and Ni–Cd battery cells (section V). Finally, in section VI, a particular interest is given to the influence of ultracapacitors on the batteries lifetime.

II. MISSION ANALYZIS OF THE BB460000 DIESEL LOCOMOTIVE

The hybridization approach in transport strongly depends on the specified mission nature. As an example, the BB460000 locomotive ensures 27 missions of local sideboards on the zone between Sotteville and Le Havre. In this section, at first, a set of indicators are proposed helping to characterize power missions and to evaluate the interest of an hybridization approach of the BB460000 diesel locomotive. In a second

time, the predominant mission which allows sizing the various energy sources of the system is identified.

A. *Mission Characterization*

The mission characterization criteria, defined according to the locomotive power (P_{LOC}) associated with a mission, are:

- The mission maximum power (P_{max} = max (P_{LOC})).
- The average power (P_{av} = <P_{LOC}>).
- The energy quantity (E_u) required to fulfill the mission of the storage element.

$$E_u = \max_t(E_{st}(t)) - \min_t(E_{st}(t)) \quad (1)$$

where

$$E_{st}(t) = -\int_0^t (P_{LOC} - P_{av})\,dt \quad (2)$$

Note that positive power values are equivalent to discharge the storage device while negative power values correspond to a storage device charging.

The storage element is characterized, from the point of view of the power, by the maximal power $P_{max\text{-}st}$ of its mission. P_{st} is defined as the mission of an "equivalent storage". It is equal to the difference between the whole mission of the locomotive (P_{LOC}) and its average power (P_{av}).

According to the "frequency based energy management strategy" detailed in section III, the average power allows sizing the diesel generator whose the nominal power is $P_{DGnom} = P_{av}$.

The power hybridization potential factor ($PHP = 1 - P_{av}/P_{max}$) is used to estimate the interest of hybridization. The more the *PHP* weak, the more hybridization approach difficult. For the set of BB460000 locomotive missions, the *PHP* is always upper than 91%. It can be concluded that missions are really suitable for hybridization.

B. *Predominant Mission*

The first sizing factor is the peak value power P_{max} for every mission. To fulfill all missions, the locomotive is sized with the greatest value of the maximal power of all missions. With the "frequency based energy management strategy", we suppose that the diesel generator (DG) permanently supplies the average power of the mission. Therefore, the diesel generator is sized with respect to the biggest average power (P_{DGnom} = 70 kW: average power of the J14-4 mission) [1]. Fig. 1 shows the distribution of all BB460000 locomotive missions according to P_{max} and E_u (the average power being already fixed by the J14-4 mission to 70 kW). The J14-4 mission is dominant with respect to the useful energy. It is slightly dominated by the J15-2 mission in terms of maximal power. Regarding the small difference between the maximal power of the J14-4 mission (869 kW) and the one of the J15-2 mission (874 kW), the J14-4 mission is considered, with a good estimate, as the "dominant mission" according to the three criteria P_{av}, P_{max} and E_u. Therefore, this latter mission is taken as reference for the design process.

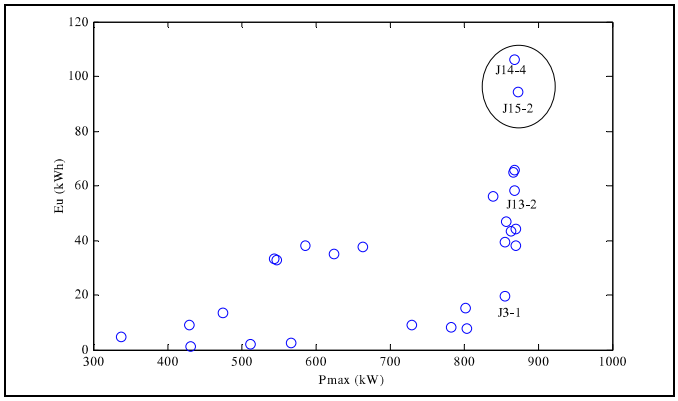

Figure 1. Distribution of the 27 locomotive missions according to P_{max} and E_u

III. Energy Management Strategy Based on Frequency Sharing

In order to define the mission part dedicated to each storage element, an energy management strategy based on a frequency sharing is applied. The frequency energy management strategy is based on a new frequency analysis of energy storage devices and energy generator. Its principle is based on the following rule: The fast storage elements SC (ultracapacitors) ensure high frequency components of the mission (Fig. 2). The energy source DG (Diesel Generator) operates as often as possible at its nominal power and the remainder of the mission is devoted to the BT (batteries). In fact, for the actual system operation, a more complex "stop and go" strategy is adapted for the diesel generator management. Indeed, this latter source has to be switched off when the demanded power is low regarding the storage element state of charge. The «stop and go strategy» allows determining the diesel generator control reference based on the low frequency part of the mission (P_{DG}+P_{BT}) and on the battery state of charge (SOC_{BT}) as follows:

If (P_{DG}+P_{BT}) > $P_{BT\ dchmax}$ or SOC_{BT} < 90% then "Start DG"=1, else "Start DG"=0.

$P_{BT\ dchmax}$ is the maximal power of batteries in discharge mode.

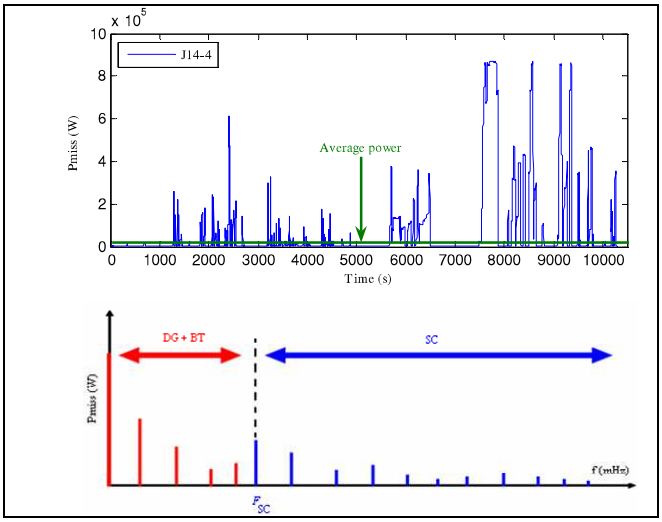

Figure 2. Power demand cycle (upper part) and mission distribution according to a frequency axis (lower part)

An hysteresis is introduced in order to fulfill a minimal operating duration before stopping and a minimal idling duration before starting.

From the whole locomotive power mission (P_{LOC}), a high pass filter allows sharing the high frequency part devoted to ultracapacitors. The mission of the batteries P_{BT} is obtained by subtracting the diesel generator power from the lower frequency part of the locomotive power mission (see Fig. 3).

This management strategy makes compatible the frequency components of the mission with the intrinsic characteristics of all sources:

1. The diesel generator is switched off or operates at its nominal power which is the optimal operating point with minimal fuel burn and lowest atmospheric pollution (CO_2) [11].

2. Batteries are as energy sources providing few slow dynamic cycles (about 1000 cycles). Indeed, the best way for enhancing batteries lifetime is to prevent them from fast dynamic currents and high number of cycles.

3. Contrarily to batteries, ultracapacitors are able to face fast dynamic currents and significant number of cycles (typically 500000 cycles) [12].

Table I gives a summary source characteristics.

IV. Power Flow Sizing Model

The locomotive sizing is based on a power flow sizing model. This later allows, from the sharing of storage element missions (P_{BT}, P_{SC}) and by taking into account their energy efficiencies (rd_{BT}, rd_{SC}), to determine the required cells number (N_{BT}, N_{SC}) without considering their arrangement in series or in parallel. This model is presented in Fig. 4. The battery and ultracapacitor sizing techniques are detailed in [1].

TABLE I. Characteristics of Energy Sources

	DG	BT	SC
Specific energy (Wh/kg)	-	20-200	1-10
Specific power (W/kg)	94	5-20	1000-3000
Charge time	-	1-5h	1-30s
Discharge time	-	0.3-3h	1-30s
Number of cycles	-	2000	>100000

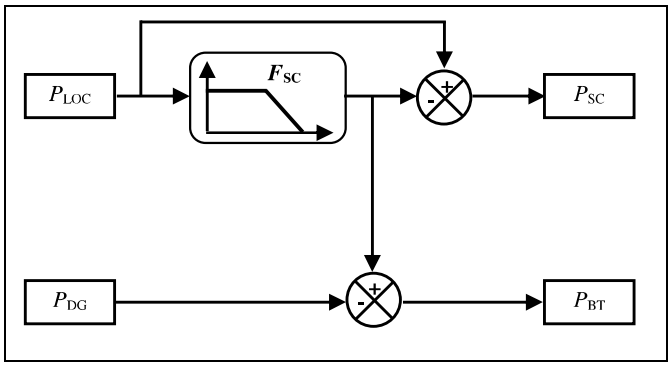

Figure 3. Basic principle of the frequency energy management strategy

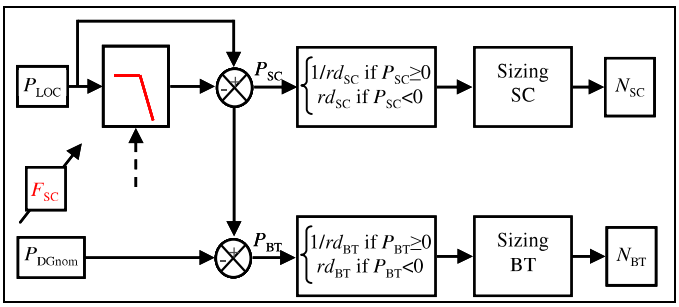

Figure 4. Power flow sizing model

V. Sizing of the Hybrid Locomotive with Ultracapacitor and Ni–Cd Batteries

In this section, the BB460000 hybrid locomotive is sized with Ni–Cd batteries (nominal capacity C=135 Ah) and ultracapacitors (EPCOS 5000 F/2.5 V). The batteries are used within the discharge (2.5C) and charge limit (1C). This leads to a maximal discharge power respectively a maximal charge power of 405 W and –162 W. Note that the storage capacity of a battery element is 162 Wh. The maximal depth of discharge is set to 80%. For each cell of ultracapacitor, the maximum delivered power is about 2.14 kW, its storage capacity is equal to 4.34 Wh and the maximal depth of discharge is fixed to 75% for an optimal life time.

Note that the ultracapacitors number does not depend on the size of the diesel generator: it is directly determined from the F_{SC} cut-off frequency. By setting the diesel generator size, the cut-off frequency is the unique sizing parameter associated with the batteries and ultracapacitors.

The evolution of batteries and ultracapacitors number according to the cut-off frequency for the dominant mission (J14-4) with a diesel generator of 70 kW is given in Fig. 5. The ultracapacitors number is raised for weak cut-off frequencies. This is due to the fact that the sizing of ultracapacitors, for the J14-4 mission, is not imposed by the peak power value but rather dominated by the supplied energy. So, the energy of ultracapacitors mission is all the more important than the cut-off frequency is weak.

For batteries, their number quickly increases for weak

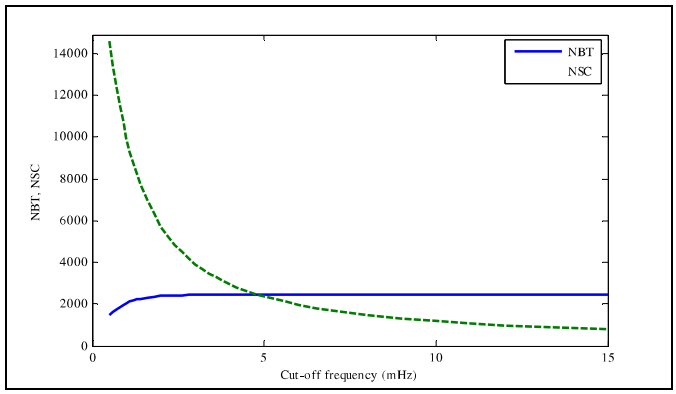

Figure 5. The number of batteries and ultracapacitors according to the cut-off frequency

cut-off frequencies then it becomes constant. Practically, for cut-off frequencies beyond 3 mHz, batteries are insensible to the energy contents variations of their mission part because they are sized with the maximal value of the required power. Then, they provide energy which enormously exceeds the useful energy necessary for the batteries storage. Indeed, at 3 mHz, 2450 batteries store 397 kWh while the useful energy necessary for the batteries and ultracapacitors storage is only 107 kWh. Thus we can conclude that the batteries are oversized on the energy plan. From a cut-off frequency of 3 mHz (4000 SCs), the number of batteries becomes constant while the number of ultracapacitors continues to decrease until zero for an infinitely big frequency. It can be concluded that, on a purely energetic plan, the ultracapacitors are not useful in this case study. Note that this particular result cannot be generalized, being relative to specific requirements of the driving mission.

A. *The Geometric Sizing Model*

The volume of each component has been estimated with relations obtained from manufacturer data, in order to fulfill space constraints. The diesel generator volume Ω_{DG} in m^3 has been interpolated with a linear function as follows [13]:

$$\Omega_{DG} = 3\times10^{-5} P_{DGnom} + 0.03 \tag{3}$$

The ultracapacitor and battery volumes (Ω_{BT} and Ω_{SC}) are calculated from the corresponding unit cell volumes (Ω_{BT0} and Ω_{SC0}), considering the total number of cells and by means of packaging coefficients (λ_{BT} and λ_{SC}):

$$\begin{cases} \Omega_{BT} = \lambda_{BT} \times N_{BT} \times \Omega_{BT0} \\ \Omega_{SC} = \lambda_{SC} \times N_{SC} \times \Omega_{SC0} \end{cases} \tag{4}$$

where $\Omega_{BT0} = 4.33\times10^{-3}$ m^3, $\Omega_{SC0} = 9.9\times10^{-4}$ m^3, N_{BT} and N_{SC} are the total number of battery and ultracapacitor cells. The packaging coefficients, which take into account of the interspaces between each cell, the volume of the static converters and the corresponding cooling devices are estimated to $\lambda_{BT} = 1.9$ and $\lambda_{SC} = 2.58$.

The whole system volume (Ω_{Σ}) is then:

$$\Omega_{\Sigma} = \Omega_{DG} + \Omega_{BT} + \Omega_{SC} \tag{5}$$

With regard to the configuration with 4000 ultracapacitors ($F_{SC} = 3$ mHz), the configuration without ultracapacitors allows to realize a set of missions with 13 m^3 of volume in less (Fig. 6). We shall also reduce the whole system mass. It is then the second issue that justifies the weak interest to use ultracapacitors toward energy and geometrical criteria for such requirements and driving mission.

B. *Evaluation of the System Investment Cost*

Similarly to the geometric sizing model, the cost model uses empiric relations derived from manufacturer data in order to evaluate the cost of each energetic source embedded in the locomotive. The whole cost in k€ of the diesel engine C_{DG}, including its installation, can be interpolated by a linear function versus the nominal power in kW:

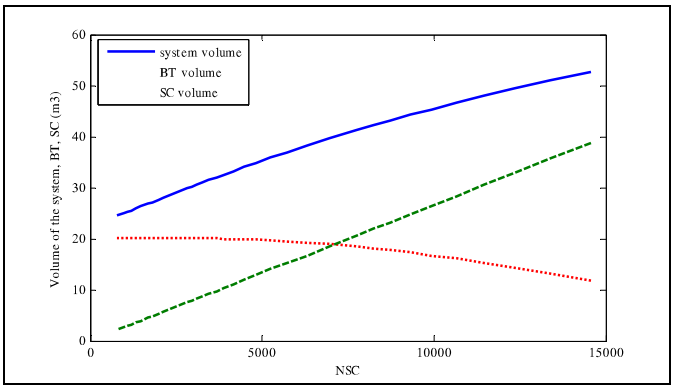

Figure 6. Volumes of system, batteries and ultracapacitors according to the ultracapacitors number

$$C_{DG} = 0.28 P_{DGnom} + 14.5 \tag{6}$$

The battery cells cost in k€ including the assembly elements and the converters is given by the following expression:

$$C_{BT} = 0.244 \times N_{BT} \tag{7}$$

The cost of the ultracapacitor cells is:

$$C_{SC} = 0.15 \times N_{SC} \tag{8}$$

The investment cost of the system (C_{Σ}) is then:

$$C_{\Sigma} = C_{DG} + C_{BT} + C_{SC} \tag{9}$$

Note that the relations used to evaluate the cost of each energetic source are exactly similar (ie linear relationships versus power or cell number) to the previous equations defining the volumes. It is not surprising to find similar waveforms and conclusions between both analyses (Fig. 6 and 7).The system investment cost, including batteries and ultracapacitors is very sensitive to the ultracapacitors number (Fig. 7). With a number of batteries superior or equal to 2500 cells, all BB460000 locomotive missions can be fulfilled even without ultracapacitors. In order to be able to decrease the battery sizing, more than 4000 ultracapacitor cells have to be embedded. Consequently, it is shown that ultracapacitors have a very weak effect on the batteries number with respect to energetic issues while they strongly increase cost, volume and system mass. The only reason which can until now justify the choice of hybridization architecture with ultracapacitors could be their impact on the battery lifetime.

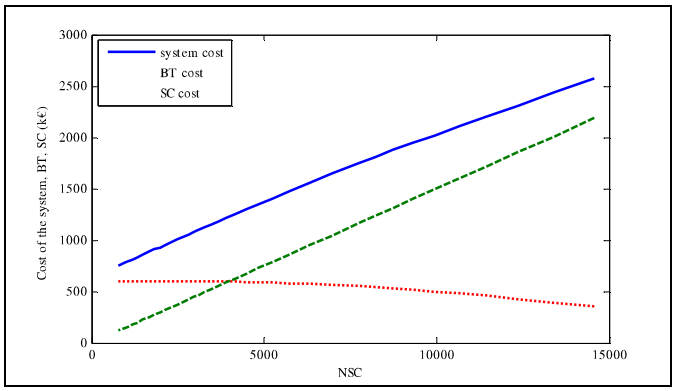

Figure 7. investment cost of system, batteries and ultracapacitors according to the ultracapacitors number

VI. Impact of Ultracapacitors on the Batteries Liftime

In this section, the impact of ultracapacitors on the battery lifetime is studied for three different missions (J14-4, J3-1 and J13-2) characterized by different intermittence dynamics. The J14-4 mission is retained as the dominant mission; missions J3-1 and J13-2 are chosen for their intermittence dynamics in terms of cycling. As indicators of battery lifetime, the total number of battery cycles N_{cycBT} (Fig. 8) and the equivalent number of battery cycles caused by microcycles (cycles with depth lower than 10%) $N_{microcycBT}$ (Fig. 9) are used. N_{cycBT} is defined by the number of deep cycles per cell multiplied by the number of cells N_{BT} and $N_{microcycBT}$ is defined as the product of the number of cycles caused by the microcycles by N_{BT}. A particular interest to microcycles is attributed in order to estimate the capacity of the ultracapacitors to face them and so to relieve the batteries. The computation of the battery–cycles number is based on the battery cycle to failure characteristic [13], [14] (i.e. total number of entire cycles (100% of the depth of discharge) submitted to a battery cell is obtained by the ponder sum of cycles according to their depth of discharge) and on the «Rainflow counting method». More details about this method can be found in [15].

Fig. 8 and 9 respectively show the evolution of N_{cycBT}, and $N_{microcycBT}$ according to the number of ultracapacitors for three considered missions. Decreasing the number of ultracapacitors, weakly increases the N_{cycBT} (Fig. 9). Indeed the evolution of N_{cycBT} for the J3-1 mission is practically insignificant. For the J14-4 mission, when comparing a case with 2100 SCs and another case without SC, the first configuration allows saving 40 battery–cycles by making this mission only once. In other words, 2100 SCs cells allow decreasing the battery–cycles of 9.9%. For the J13-2 mission, 2100 SCs allow saving 35 battery–cycles and so to decrease N_{cycBT} of 11.6%.

For the J14-4 mission, the $N_{microcycBT}$ is almost insensible to ultracapacitors number (Fig. 9). This is due to the weak intermittence dynamic of this mission. Regarding missions J3-1 and J13-2, the evolution of $N_{microcycBT}$ according to SC number is relatively weak. Note that this evolution is not monotone because of the disappearance of some microcycles in favour of deep cycles (depth of discharge>10%).

Although above examples show that the impact of ultracapacitors on the batteries life time is insignificant for these missions, nothing can guarantee the generalization of this result. With respect to the set of the BB460000 locomotive missions, it becomes necessary to enlarge the study by introducing the concepts of cost and of life time. The locomotive is supposed satisfying the set of missions with the same probability. The total duration of all missions is equal to 111.57 hours. On the basis of 12 hours of mission per day, the locomotive achieves the whole missions 39.25 times per year (12×365/111.57). In the following, two possible configurations of the hybrid locomotive are compared:

1. 2100 SCs with 2500 BTs,
2. Zero SC with 2500 BTs.

By realizing all the missions with the configuration 1 (with 2100 SCs), the number of consumed battery cycles is equal to

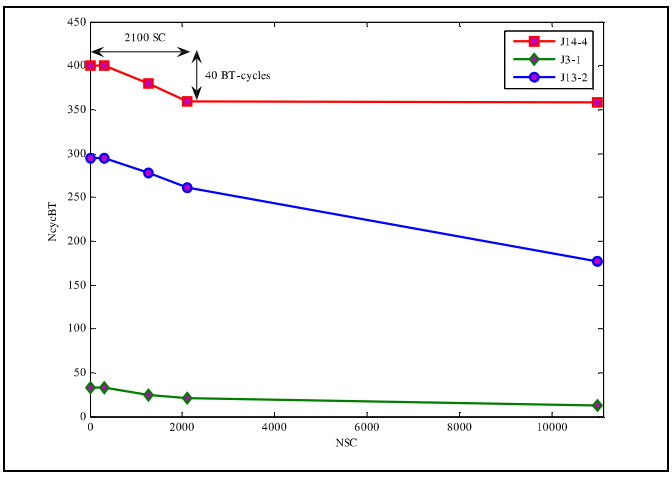

Figure 8. Number of battery–cycles according to the ultracapacitors number

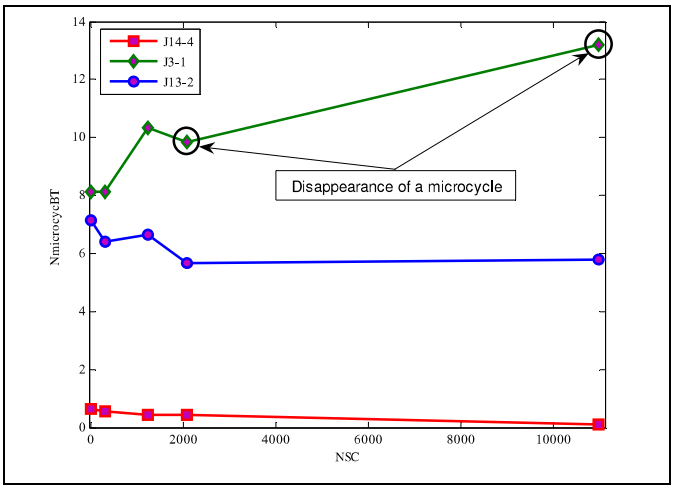

Figure 9. Number of battery–cycles caused by microcycles according to the ultracapacitors number

2069. The second one, without SC, provokes 2426 battery cycles. So 2100 SCs allow reducing 357 battery–cycles (i.e. 16% of saved cycles). Consequently, the number of battery–cycles per year is about 14012 (357×39.25). Knowing that the number of cycles offered by a Ni–Cd battery cell is about 900 cycles, 2100 SCs then allow improving the batteries life time of 0.63% for one year of mission (14012/(2500×900)).

Furthermore, 2500 batteries cost 602 k€ and 2100 ultracapacitors cost 334 k€. More than half of the batteries investment cost (334 k€) is then necessary to improve the batteries life time by 0.63% without speaking about safety issues.

The previous study proves the weak impact of ultracapacitors on the battery lifetime in this case study. Although they allow absorbing some microcycles to slightly relieve the battery, their high number constitutes an important drawback in terms of system cost, volume, mass and perhaps system safety. With the Ni–Cd battery technology and a 70 kW diesel generator, the hybrid architecture of the BB460000 locomotive could then only be reduced to battery cells (~2500) as storage elements.

VII. Conclusion

In this paper, the authors have investigated the mission characterization of the SNCF BB460000 locomotive in order to analyse its ability to be hybridized. Then a hybridization approach is proposed integrating batteries and ultracapacitors as storage elements. A detailed study is done to exactly choose the appropriate storage element regarding many criteria such as delivered power, storage energy, lifetime, volume and mass.

By applying the energy management strategy on the hybridization approach, the nominal power of the diesel generator is strongly decreased from 1 MW to 70 kW. This fact allows significantly reducing fuel consumption and carbon emissions. The hybrid locomotive may be sized with Ni–Cd batteries and ultracapacitors. But this case study has put forward that ultracapacitors have a very weak impact on the battery cell number while they strongly increase system cost, volume and mass. Note that this result cannot be generalized but is relative to specific requirements and set of driving mission. A more detailed study related to the battery-cycle numbers proved the small impact of ultracapacitors for battery lifetime improvement. Consequently, the hybridization architecture is modified by only considering ~2500 Ni–Cd battery cells with a 70 kW diesel generator.

Acknowledgment

This work has been supported by the French Environment and Energy Management Agency (ADEME).

References

[1] C.R. Akli, X. Roboam, B. Sareni, and A. Jeunesse, "Energy management and sizing of a hybrid locomotive," in *Proc. 12th EPE,* 2007, pp.8–49.

[2] F. W. Donnelly, R. L. Cousineau, and R. N. M. Horsley, "Hybrid technology for the rail industry," in *Proc. ASME/IEEE Joint Rail Conf.*, Baltimore, MD, Apr. 6–8, 2004, pp. 113–117.

[3] R. L. Cousineau, "Development of a hybrid switcher locomotive the railpower green goat", *IEEE Instrum. Meas. Mag.*, vol. 9, no. 1, pp. 25-29, Feb. 2006.

[4] W. Koczara, L. Grzesiak, and M. da Ponte, "Novel hybrid load-adaptive variable speed generating set", in *Proc. IEEE ISIE*, 1998, pp. 271–273.

[5] W. Koczara, L. Grzesiak, and M. da Ponte, "Hybrid load-adaptive variable-speed generating set: New system topology and control strategy", in *Proc. Int. Conf. Power Gener.*, Dec. 1998, pp. 6–54.

[6] W. Koczara, L. Grzesiak, and M. da Ponte, "Hybrid generator apparatus", South African Patent Application 97/11503, Dec. 22, 1997.

[7] L. Grzesiak, W. Koczara, P. Pospiech, and M. da Ponte, "Power quality of the hygen autonomous load-adaptive adjustable-speed generating system", in *Proc. APEC*, 1999, pp. 945–946.

[8] M. Osawa, *The Ne@Train, First Hybrid Material in the World.* Bruxelles, Belgium: Rail international, 2004, pp. 9–86.

[9] David Briginshaw, "Hybrid traction system benefits environment: Japan's new energy train project uses a hybrid diesel-electric traction system to achieve major reductions in energy consumption, noxious emissions, and noise", *Int. Railway J.,* Dec. 1, 2004.

[10] M. Thiounn, "PLATHEE–A platform for energy efficiency and environmentally friendly hybrid trains," *in Proc. 8th World Congr. Railway Res.*, Seoul, Korea, May 18–22, 2008. Paper R.3.4.3.3.

[11] D. Bonta, V. Tulbure, and C. Festila, "Diesel-engine intelligent control in railway traction", in *Proc. IEEE Int. Conf. Autom., Quality, Test., Robot.*, May. 2006, vol. 1, pp. 318–320.

[12] P. Mestre and S. Astier, "Utilization of Ultracapacitors as an auxiliary power source in electrical vehicle", in *Proc. EPE*, 1997, pp. 4.670–4.673.

[13] C.R. Akli, B. Sareni, X. Roboam, and A. Jeunesse, "Integrated optimal design of a hybrid locomotive with multiobjective genetic algorithms," selected paper from *OIPE*'2008, *International Journal of Applied Electromagnetics and Mechanics* (*IJAEM*), vol. 30, no. 3/4, pp. 151–162, 2009.

[14] R. Dufo-Lopez, J.L. Bernal-Agustin, "Multi-objective design of PV–wind–diesel–hydrogen–battery systems," *Renewable Energy*, pp. 2559–2572, Apr. 2008.

[15] S. H. Baek, S. S. Cho, and W. S. Joo,"Fatigue life prediction based on the Rainflow cycle counting method for the end beam of a freight car bogie," *Int. J. Autom. Technol.*, vol. 9, no. 1, pp. 95–101, Feb. 2008.