HAL open science

Stop and Think about Basal Ganglia Functional Organization: The Pallido-Striatal "Stop" Route

Marc Deffains, Liliya Iskhakova, Hagai Bergman

▶ **To cite this version:**

Marc Deffains, Liliya Iskhakova, Hagai Bergman. Stop and Think about Basal Ganglia Functional Organization: The Pallido-Striatal "Stop" Route. Neuron, 2016, 89 (2), pp.237-239. 10.1016/j.neuron.2016.01.003 . hal-03838692

HAL Id: hal-03838692

https://hal.science/hal-03838692v1

Submitted on 9 Nov 2022

HAL is a multi-disciplinary open access archive for the deposit and dissemination of scientific research documents, whether they are published or not. The documents may come from teaching and research institutions in France or abroad, or from public or private research centers.

L'archive ouverte pluridisciplinaire **HAL**, est destinée au dépôt et à la diffusion de documents scientifiques de niveau recherche, publiés ou non, émanant des établissements d'enseignement et de recherche français ou étrangers, des laboratoires publics ou privés.

Stop and think about basal ganglia functional organization: The pallido-striatal "stop" route

Marc Deffains [1,2], Liliya Iskhakova [1,2] & Hagai Bergman [1,2,3]

1 Department of Medical Neurobiology, Institute of Medical Research Israel-Canada (IMRIC), The Hebrew University-Hadassah Medical School, Jerusalem, 91120, Israel

2 The Edmond and Lily Safra Center for Brain Sciences, The Hebrew University, Jerusalem, 91904, Israel

3 Department of Neurosurgery, Hadassah Medical Center, Jerusalem, 12000, Israel

Abstract

The "arkypallidal" neurons of the globus pallidus (external segment) emit feedback GABAergic projections to the striatum. In this issue of Neuron, Mallet et al. (2015) show that "arkypallidal" neurons provide a Stop signal, suppressing the development of Go-related striatal activity.

Most of neurology and neuroscience textbooks describe basal ganglia (BG) network as two segregated internal BG pathways (Fig. 1A). Both BG pathways start in the striatum and converge on the BG output structures (i.e., the internal segment of the globus pallidus and the substantia nigra pars reticulata, GPi and SNr, respectively). The "direct pathway" (striatum-GPi/SNr) is mono-synaptic GABAergic inhibitory, whereas the "indirect pathway" (striatum-GPe-STN-GPi/SNr) is poly-synaptic dis-inhibitory through the GABAergic projections of the striatum and the external segment of the globus pallidus (GPe) and the glutamatergic (excitatory) subthalamic nucleus (STN). Thus, GPe

is considered to be a relay station in the "indirect pathway" between the striatum and the STN (Albin et al., 1989;Gerfen et al., 1990; Fig. 1A). The notion of two segregated BG pathways has been strongly supported by the finding of two non-overlapping populations of striatal medium spiny (projection) neurons (MSNs). MSNs with D1 dopamine receptors give rise to the "direct pathway", whereas MSNs expressing D2 dopamine receptors project to GPe and constitute the origin of the "indirect pathway" (Fig. 1A).

This "box and arrow" model dividing the BG into two segregated functional routes has been very useful for the understanding of the computational physiology and pathophysiology of the BG network, as well as for the development of pharmacological and surgical treatments of common BG disorders (Bergman et al., 1990). However, it does not reflect the extreme complexity of the BG circuitry, notably the intrinsic neuronal heterogeneity of GPe and its full connectivity within the BG network.

In vivo electrophysiological recordings in non-human primates (DeLong, 1971;Elias et al., 2007) and rodents (Benhamou et al., 2012) revealed that GPe neurons can be divided into two distinct populations based on their discharge rate and pattern. Most GPe neurons (~60-85 %) exhibit a high-frequency discharge (50-70 spikes/s) interrupted by long duration (0.3-2s) pauses (HFD-P neurons). The remainder exhibits a low-frequency discharge (10-30 spikes/s) with occasional brief high frequency bursts (LFD-B neurons).

In line with this electrophysiological dichotomous organization of the GPe, recent studies of the Oxford group headed by Peter Magill used juxtacellular recording-labeling technique in dopamine-depleted (Mallet et al., 2012) and dopamine-intact (Abdi et al., 2015) rats, to identify two categories of GABAergic GPe neurons. These two categories of GPe neurons exhibit distinct neurochemical and structural features, and have been labeled as "prototypic" and "arkypallidal" neurons. The "prototypic" neurons comprises approximately two-thirds of all GPe neurons and coexpress parvalbumin (PV) and transcription factors Nkx2-1 and Lhx6, while the "arkypallidal" neurons account for only

one-fourth of GPe neurons and coexpress preproenkephalin (PPE) and transcription factors FoxP2, Meis2. Remarkably, the "prototypic" neurons only projects to the STN and the "arkypallidal" neurons exclusively innervate the striatum. These GPe feedback projections to the striatum parallelized the well-known feedback GPe to STN projections (Fig. 1B, although the cellular origin of GPe neuronal populations projecting to the STN is not known yet). Therefore, GPe can no longer be considered as a mere relay station in the "indirect pathway" (Fig. 1B). Instead, the emerging view is that GPe plays a central/pivotal role in the orchestration of neuronal activity along the BG network. This GPe central role is revealed by providing a massive GABAergic input to the striatum, targeting both striatal projection neurons and interneurons, as well as to the STN and to the BG output structures - GPi/SNr.

Fortunately, "prototypic" and "arkypallidal" GPe neurons have distinct electrophysiological signatures that allow us to safely discriminate them based on their firing rate and pattern properties across different brain states (Abdi et al., 2015;Mallet et al., 2012). In anesthetized rats, the "prototypic" neurons have a high and regular firing rate regardless of brain state (i.e., EEG slow wave activity which is similar to activity observed during natural sleep or EEG spontaneous activation which is close to activity observed during awake/behaving state). In contrast, the "arkypallidal" neurons have lower and irregular firing rate that is reduced during slow wave activity. Finally, in dopamine-depleted animals, the "prototypic" neurons exhibit anti-phasic firing compared to cortical slow wave (~1Hz) and beta (~13-30Hz) oscillations, but the "arkypallidal" neurons fire in-phase (Mallet et al., 2008;Mallet et al., 2012). These electrophysiological signatures enable the studies of the different physiological roles and functions of the two distinct populations of GPe neurons.

In this issue of Neuron, Mallet et al. (2015) investigate the role of the cortex-BG network in suppressing on-going actions. To do so, they recorded the neuronal activity of the

"prototypic" and "arkypallidal" GPe neurons in rats engaged in a Stop Signal Task. First, they showed that "prototypic" and "arkypallidal" neurons can be identified through their distinctive firing properties across natural sleep/wake cycle. This is a step beyond the previous classification of GPe neurons based on experimentally induced anesthesia state. Once this objective classification of the GPe neurons was established, Mallet et al. (2015) discovered that the "arkypallidal" neurons selectively respond to Stop cue signaling the sudden cancellation of the action-in-preparation. In addition, these "arkypallidal" Stop responses temporally fit with the timing of the suppression of developing striatal Go-related activity. This is the first demonstration of a distinct physiological action of the "arkypallidal" neurons compared to the "prototypic" neurons in the GPe. Moreover, the discovery of this pallido-striatal motor-suppressing route within the BG network compels us to rethink the role of the GPe in cancellation or suppression of inappropriate behaviors. Schmidt et al. (2013) have previously suggested that cancelling action involves a race in information processing between BG pathways. Indeed, these authors showed that the fast subthalamic activation (probably via hyper-direct cortical projections to STN, Fig. 1B) in response to Stop/No-Go signal occurs before the transmission of the striatal Go related-activity to GPi/SNr (via the direct pathway), thus stopping action release. However, this fast Stop/No-Go subthalamic response seems too transient to completely cancel the action-in-preparation (Mallet et al., 2015). Therefore, based on their results, Mallet et al. (2015) now proposed a two-step model for successful complete action suppression: actions-in-preparation are first paused via a subthalamic fast activation (directly transmitted to the BG output nuclei - GPi/SNr) and then cancelled via GPe "arkypallidal" Stop GABAergic responses that suppress the Go process within the striatum.

As judiciously mentioned by Mallet et al. (2015) in their discussion, the afferent projections of the "arkypallidal" neurons are still unknown. Consequently, to date, it is

impossible to know the relative contribution of network vs. intrinsic properties of "arkypallidal" neurons to the Stop signals. Given the importance of their conclusions for the neuro-scientific community, it seems legitimate to hope that in a near future, researchers will use bio-molecular or optogenetic tools to provide us causal results (e.g., effects of an inactivation of the "arkypallidal" neurons on behavior during Stop Signal Task) that strengthen those reported up to now.

Interestingly, a recent study suggests that "prototypic" neurons selectively express Lhx6 or PV, thus dividing the homogeneous population of "prototypic" neurons described by Mallet and colleagues into two distinct populations (Gittis et al., 2014;Mastro et al., 2014). In this study, the authors demonstrated that Lhx6- and PV-GPe neurons differentially innervate a large number of brain areas within and outside the BG. In particular, they showed striatal projections of both Lhx6- and PV-GPe neurons that are selective for striatal GABAergic interneurons (i.e., fast spiking interneurons, FSIs), suggesting that they are distinct from "arkypallidal neurons". Therefore, neuronal heterogeneity of the GPe might be even more complex than the bipartite "prototypic" vs. "arkypallidal" organization. Further studies should be conducted to clarify the role of the striatal projections of both Lhx6- and PV-GPe "prototypic" neurons that in contrast to "arkypallidal" neurons selectively target the FSIs.

In Parkinson’s disease (PD), it is established that GPe neurons fire at an abnormal low rate and exhibit pathological discharge pattern, such as an oscillatory activity (Wichmann and DeLong, 2003). Given the GABAergic nature of the GPe neurons, this hypo-activity of the GPe is congruent with the abnormal elevation of the firing rate of the subthalamic neurons observed in PD patients and animal models of PD. From now on, computational models of PD should also consider the evidence of feedback GABAergic projections from GPe to striatum, as well as the reciprocal connectivity between STN and GPe (Fig. 1B).

Based on their firing rate and pattern features, it is tempting to speculate that the "prototypic" and "arkypallidal" neurons respectively correspond to the HFD-P and LFD-B neurons previously described in the GPe of both behaving rodents (Benhamou et al., 2012) and non-human primates (DeLong, 1971). If "dreams come true", the activity of the "prototypic/HFD-P" and "arkypallidal/LFD-B" neurons might also be examined in non-human primates under several behavioral conditions in health and disease. Therefore, the discovery of a pallido-striatal motor-suppressing route by Mallet et al. (2015) provides a major new insight into the understanding of the physiology and pathophysiology of the BG network.

References

Abdi,A., Mallet,N., Mohamed,F.Y., Sharott,A., Dodson,P.D., Nakamura,K.C., Suri,S., Avery,S.V., Larvin,J.T., Garas,F.N., et al. (2015). Prototypic and arkypallidal neurons in the dopamine-intact external globus pallidus. J. Neurosci. *35*, 6667-6688.

Albin,R.L., Young,A.B., and Penney,J.B. (1989). The functional anatomy of basal ganglia disorders. Trends Neurosci. *12*, 366-375.

Benhamou,L., Bronfeld,M., Bar-Gad,I., and Cohen,D. (2012). Globus Pallidus external segment neuron classification in freely moving rats: a comparison to primates. PLoS. One. *7*, e45421.

Bergman,H., Wichmann,T., and DeLong,M.R. (1990). Reversal of experimental parkinsonism by lesions of the subthalamic nucleus. Science *249*, 1436-1438.

DeLong,M.R. (1971). Activity of pallidal neurons during movement. J. Neurophysiol. *34*, 414-427.

Elias,S., Joshua,M., Goldberg,J.A., Heimer,G., Arkadir,D., Morris,G., and Bergman,H. (2007). Statistical properties of pauses of the high-frequency discharge neurons in the external segment of the globus pallidus. J. Neurosci. *27*, 2525-2538.

Gerfen,C.R., Engber,T.M., Mahan,L.C., Susel,Z., Chase,T.N., Monsma,F.J., Jr., and Sibley,D.R. (1990). D1 and D2 dopamine receptor-regulated gene expression of striatonigral and striatopallidal neurons. Science *250*, 1429-1432.

Gittis,A.H., Berke,J.D., Bevan,M.D., Chan,C.S., Mallet,N., Morrow,M.M., and Schmidt,R. (2014). New roles for the external globus pallidus in basal ganglia circuits and behavior. J. Neurosci. *34*, 15178-15183.

Mallet,N., Schmidt, R., Leventhal, D., Chen, F., Amer, N., Boraud, T., and Berke, J.D. (2015). Arkypallidal cells send a Stop signal to Striatum. Neuron, this issue.

Mallet,N., Micklem,B.R., Henny,P., Brown,M.T., Williams,C., Bolam,J.P., Nakamura,K.C., and Magill,P.J. (2012). Dichotomous organization of the external globus pallidus. Neuron *74*, 1075-1086.

Mallet,N., Pogosyan,A., Marton,L.F., Bolam,J.P., Brown,P., and Magill,P.J. (2008). Parkinsonian beta oscillations in the external globus pallidus and their relationship with subthalamic nucleus activity. J. Neurosci. *28*, 14245-14258.

Mastro,K.J., Bouchard,R.S., Holt,H.A., and Gittis,A.H. (2014). Transgenic mouse lines subdivide external segment of the globus pallidus (GPe) neurons and reveal distinct GPe output pathways. J. Neurosci. *34*, 2087-2099.

Schmidt,R., Leventhal,D.K., Mallet,N., Chen,F., and Berke,J.D. (2013). Canceling actions involves a race between basal ganglia pathways. Nat. Neurosci. *16*, 1118-1124.

Wichmann,T., and DeLong,M.R. (2003). Pathophysiology of Parkinson's disease: the MPTP primate model of the human disorder. Ann. N. Y. Acad. Sci. *991*, 199-213.

Figures

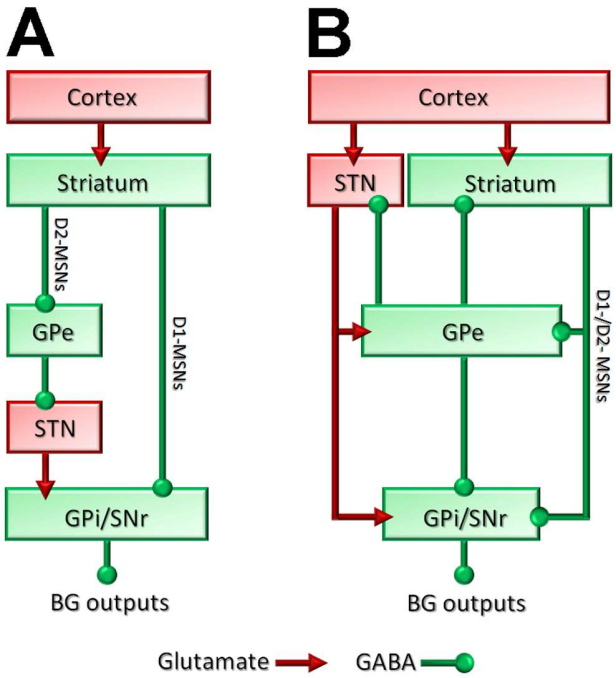

Figure 1. The functional connectivity of the basal ganglia network: Yesterday and Today. (A) The classic D1/D2 direct/indirect model of the BG. The GPe is considered as a relay station in the "indirect pathway" between the striatum and the STN. **(B)** The revised functional connectivity of the BG. Like the striatum, the STN is an input stage of the BG that innervates GPe and the BG output structures (GPi and SNr). In return, GPe projects back to the striatum and the STN and innervates the GPi and the SNr. Glutamatergic and GABAergic connections are shown in red and green, respectively. Abbreviations: BG: basal ganglia; D1-/D2-MSNs: striatal medium spiny (projection) neurons expressing D1/D2 dopamine receptors; GPe and GPi: external and internal segment of the globus pallidus; STN: subthalamic nucleus; SNr: substantia nigra pars reticulata.