HAL
open science

Results of the first Helicon Plasma Thruster (HPT) coupling test campaign within the HIPATIA project

M Ruiz, A Velasco, V Gómez, J Navarro-Cavallé, G Dickeli, A Vinci, Stéphane Mazouffre, S Gorbachev, N Hildebrand

▶ To cite this version:

M Ruiz, A Velasco, V Gómez, J Navarro-Cavallé, G Dickeli, et al.. Results of the first Helicon Plasma Thruster (HPT) coupling test campaign within the HIPATIA project. 37th International Electric Propulsion Conference, Jun 2022, Cambridge, United States. hal-03797514

HAL Id: hal-03797514

https://hal.science/hal-03797514v1

Submitted on 4 Oct 2022

HAL is a multi-disciplinary open access archive for the deposit and dissemination of scientific research documents, whether they are published or not. The documents may come from teaching and research institutions in France or abroad, or from public or private research centers.

L'archive ouverte pluridisciplinaire **HAL**, est destinée au dépôt et à la diffusion de documents scientifiques de niveau recherche, publiés ou non, émanant des établissements d'enseignement et de recherche français ou étrangers, des laboratoires publics ou privés.

Results of the first Helicon Plasma Thruster (HPT) coupling test campaign within the HIPATIA project

IEPC-2022-524

Presented at the 37th International Electric Propulsion Conference
Massachusetts Institute of Technology, Cambridge, MA USA
June 19-23, 2022

M. Ruiz[1] and A. Velasco[2]
SENER Aeroespacial, Tres Cantos, Madrid, 28760, Spain

V. Gómez[3] and J. Navarro-Cavallé[4]
Universidad Carlos III de Madrid, Leganés, Madrid, 28911, Spain

G. Dickeli[5]
AIRBUS Defence and Space SAS, France

A. Vinci[6] and S. Mazouffre[7]
ICARE-CNRS, Orleáns, 45071, France

S. Gorbachev[8] and N. Hildebrand[9]
AST Advanced Space Technologies GmbH, Osterholz-Scharmbeck, 27711, Germany

HIPATIA (HelIcon PlasmA Thruster for In-Space Applications) project was awarded with a European Commission H2020 grant for the development of the HPT (Helicon Plasma Thruster) and the technologies associated to it. The project pursues the verification of the functionality and performances of an Electric Propulsion (EP) system based on the HPT technology, for its application in small spacecraft. With a duration of 36 months, the project has achieved several goals during the first 18 months of progress, including the development, integration and functional test demonstration of the units in the HIPATIA system: Thruster Unit (TU), Radiofrequency Generation and Power Unit (RFGPU) and the Propellant Flow Control Unit (PFCU). These three units have also been coupled for an extensive test campaign during 2021 that has produced the first set of results for the HIPATIA system performances, which will be reported herein.

I. Introduction

The Helicon Plasma Thruster (HPT) is a radiofrequency Electric Propulsion (EP) thruster operating in the Megahertz range. It is a thruster concept that prospectively can offer a good level of performance while eliminating many of the design and manufacturability issues - electrodes, high voltage electronics, and complex fabrication - which have afflicted EP systems to date.

The HPT is a joint development by SENER and UC3M, that started with the first prototype development and

[1] HIPATIA Project Manager, Avionics and Advanced Systems Division, mercedes.ruiz@aeroespacial.sener
[2] Electronics Engineer, Avionics and Advanced Systems Division, amadeo.velasco@aeroespacial.sener
[3] PhD Candidate, Equipo de Propulsión Espacial y Plasmas, Universidad Carlos III de Madrid. victor.g.garcia@alumnos.uc3m.es
[4] Visiting Professor, Equipo de Propulsión Espacial y Plasmas, Universidad Carlos III de Madrid, janavarr@ing.uc3m.es
[5] Electric propulsion development architect, guillaume.dickeli@airbus.com
[6] PhD Student, ICARE - CNRS, alfio.vinci@cnrs-orleans.fr
[7] Research Director, Head of the Electric Propulsion team, ICARE - CNRS, stephane.mazouffre@cnrs-orleans.fr
[8] Development Engineer, sergey.gorbachev@ast-space.com
[9] Development Engineer, nils.hildebrand@ast-space.com

Assembly, Integration and Test (AIT) in 2015 [1-2]. This first model has evolved in the last years, resulting in a set of several Elegant BreadBoard Models (EBBMs) that work in different power levels and/or configurations. The HPT design that is being used in HIPATIA is currently in Technology Readiness Level 5 (TRL5) and it operates in the 300-500W range.

HIPATIA (HelIcon PlasmA Thruster for In-Space Applications, [3]) project was awarded with a European Commission H2020 grant for the development and evolution of the HPT and the technologies associated to it (fluidics and electronics), completing in this way the development and characterisation of a complete EP system. The HIPATIA consortium is led by SENER Aeroespacial, and it counts with the participation of Universidad Carlos III de Madrid, AIRBUS Defence and Space, the Centre National de la Recherche Scientifique and Advanced Space Technologies.

Given the relatively simple and robust design of the HPT technology (no grids, neither neutralisers), HIPATIA has the potential for providing a cost-effective solution for large constellation of small satellites (<500 kg, <750W of power for EP) to perform in-orbit insertion, station-keeping and End of Life (EOL) disposal.

This paper reviews the advances in the HIPATIA project and reports on the development status and achieved performances of the units that have been developed to integrate the propulsion system surrounding the HPT. The results of the first coupling test campaign will also be reported, together with the progresses in the complementary research activities aimed to improve the current system performances. From this point, the paper explores the plans for taking an HPT-based propulsion subsystem to TRL6 in 2022.

II. The HPT and the HIPATIA System

A. The Thruster Unit – HPT

The Helicon Plasma Thruster (and similar concepts) are electromagnetic RF thrusters which have been under research and development [4-5] (and even reach flight TRL [6-7]) in several countries around the World.

The physical elements of a HPT are (Fig. 1): a cylindrical dielectric chamber; a gas injection system, usually at the back of the chamber; an external antenna wrapped around the chamber and emitting RF waves, typically in the range 1-26MHz; and a magnetic field generator (permanent magnets for HIPATIA's Thruster Unit) that creates a longitudinal magnetic field, typically in the range of 10^2 to 10^3 Gauss. Outside the chamber, the divergent magnetic topology creates a magnetic nozzle that channels the supersonic plasma flow, transforming the plasma's internal energy into an axially directed one in a process very similar to the expansion of hot gas in a conventional solid nozzle.

The HPT functional mechanism can be split into the following basic processes. First, the propellant, typically an inert gas, is ionized by exciting it with an electromagnetic RF field. Broadly, this corresponds to an inductively coupled plasma discharge, yielding a quasi-neutral plasma where the populations of electrons and ions interact with each other, maintaining an overall neutral electrical charge, which is contained in a dielectric discharge chamber. Simultaneously, an external stationary magnetic field is applied to the plasma discharge with three roles. At the plasma production chamber, the magnetic field enhances the RF-wave propagation and the plasma heating, ideally reaching the desired helicon mode. This mode is characterised by an inherent high plasma density and moderate electron temperature. The second role of the magnetic field is to shield the plasma from the chamber walls with the purpose of reducing thermal loads and erosion, thus, increasing the lifetime of the thruster. Furthermore, at the external region of the discharge chamber, the close magnetic field typically shapes a divergent nozzle, or magnetic nozzle in the corresponding literature [8-9].

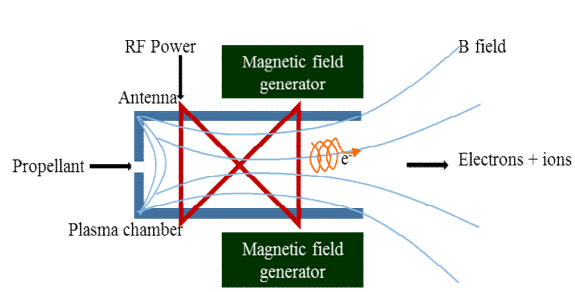

Fig. 1 Conceptual design of the HPT and its main constituents.

This magnetic nozzle is responsible for converting the thermal energy of the plasma within the discharge chamber, mostly carried by the electrons population, into axially directed ion kinetic energy. Electrons, which are fully magnetised (at the 200-2000G range) will expand outwardly following the magnetic field lines. Because ions are heavier than electrons and are just weakly magnetised (at this field ranges), an ambipolar electric field arises within

the plasma to keep its quasi-neutral character. This potential drop along the nozzle expansion, which is highly related to the electron temperature at the plasma production source, accelerates the ions downstream, producing thrust.

B. The HIPATIA project's goal and plan

The HIPATIA project's long-term goal is to develop an in-Space propulsion system based on the HPT concept. The project is advancing in the verification of the function and performances of a complete EP system based on the HPT technology. In this context, the project is working on four different fronts:

1) The identification of the potential target market, setting requirements for the system and the technology units developed within HIPATIA. This action is complemented with validation and verification tasks throughput the project.
2) The development of the main units constituting the propulsion system (Thruster Unit, Radiofrecuency Generation and Power Unit and Propellant Flow Control Unit) to satisfy the requirements established for that market;
3) The test of these units' research and evolution models as well as the verification of the integrated system functionality and performances at different development stages;
4) The understanding of the helicon plasma physics to help simulating, analysing and improving the system performances. This includes activities in researching alternative thuster configurations, propellants and developing simulation codes.

The activities related to the aforementioned tasks are developed following parallel paths (Fig. 2) that come together at different stages of the project's development. During such milestones, the advances and obtained results are reviewed, assessed and cross-fed among the parallel paths, establishing the way forward for the next phases of the project.

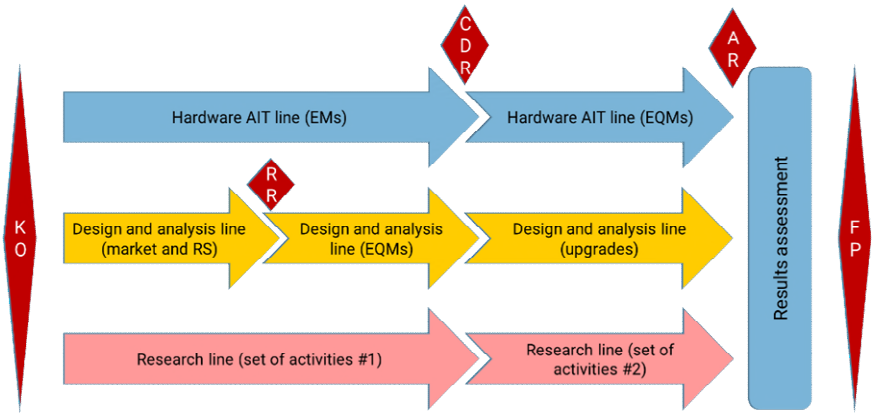

Fig. 2. Development activities paths within HIPATIA.

During the first half of the project, Engineering Models (EMs) and EBBMs for each unit were developed, unitary tested and coupled during the first coupling test campaign that is reported in this paper.

C. The HIPATIA System concept

The impacts associated with evolving the HPT towards higher TRLs would not be achieved unless the complete EP system has proven its integration and operation consistency. The aim of the HIPATIA project is to advance the development status of the HPT up to TRL 6-7, but it is also facing the integration challenges of a complete EP system.

The constituting blocks of a propulsion subsystem based on the HPT, being the Thruster Unit (TU) the principal element of the subsystem, are shown in Fig. 3.

In the case of the HIPATIA system, in addition to the TU, the EP system also counts on:

- A Radiofrequency Generation and Power Unit (RFGPU) to power and control the whole system. It converts Direct Current (DC) power from the spacecraft bus into the required RF power to the thruster antenna. In addition, the RFGPU includes an Acquisition and Control Unit (ACU) for system elements control throughout the thruster operational range.
- A Propellant Flow Control Unit (PFCU) to manage the propellant expansion and flow from the tanks to the thruster. In open loop operation the PFCU provides the desired flow to the thruster by ramping up during ignition and providing a constant flow around the optimal operational point as set by the ACU. In closed loop operation with the thruster, the truly needed flow is adjusted based on the thruster feedback signal.

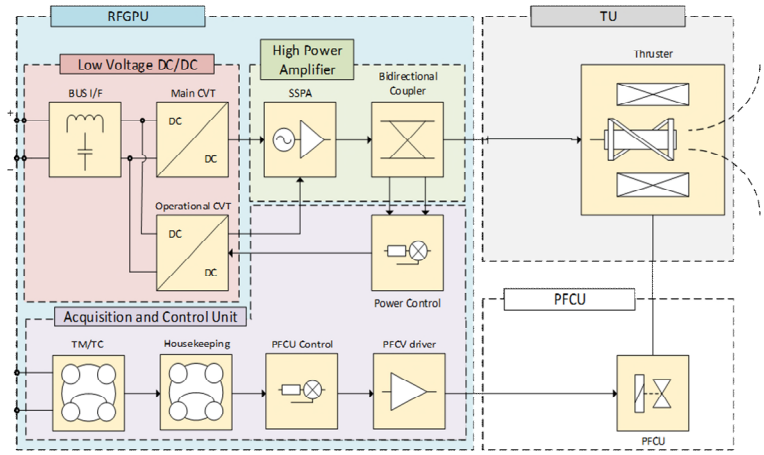

Fig. 3 HIPATIA system concept building blocks.

Within this system, the main interfaces of the TU are the propellant inlet to the PFCU and the RF connector interfacing the RFGPU via the bidirectional coupler. Apart from these, the different elements constituting the thruster are mounted on a structure that is the main interface to the spacecraft, both at structural and thermal levels. The main interfaces of the RFGPU within the HIPATIA system are the RF connector that allows routing the radiofrequency power to the TU through a dedicated harness and the interface with the PFCU that allows telemetry/telecommand for control.

III. Technology development in the HIPATIA Project

A. The Thruster Unit EM and EBBMs

The TU is the core element of the HIPATIA System, in charge of providing the required propulsive performances by generating, heating, confining and accelerating the plasma to produce thrust.

As initial input to the HIPATIA project, a TU EM design was made available (Fig. 4 left), coming from a previous project partially funded by ESA. This model combined the previous heritage from experimental prototypes with new design concepts aiming at making the unit more space-product oriented. One of the EM main differences with respect to previous prototypes was the magnetic generator, being permanent magnets implemented in this new model instead of coils. The TU was assembled and tested during the first semester of 2020 leading to unsatisfactory results.

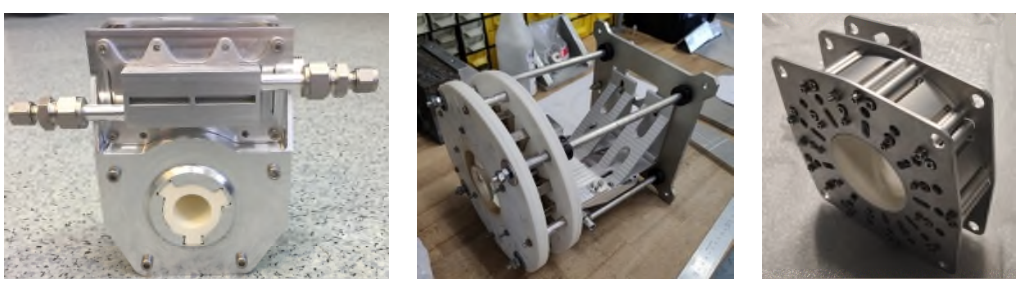

Fig. 4. TU EM (left), EBBM1 (center) and updated magnet assembly (right).

To overcome that deviation from the expected response and enable a prototype with similar characteristics to the EM but with upgrades allowing it to work in the desired operational range, two new engineering models were created: EBBM1 and EBBM2. These models were tested during the first part of the second semester of 2020, allowing to identify which characteristics from the EM could be reused, which ones should be reviewed and identifying existing gaps. Of these two, and looking at the obtained response, EBBM1 (Fig. 4 center) was selected to carry out the first coupling campaign, which would validate the functional chain of the HIPATIA system and would provide the preliminary performance assessment of the thruster design.

In addition to the alternative EBBM designs, a new variable magnet assembly (Fig. 4 right), which enables the parametric exploration of the applied magnetic flux as well as the spatial arrangement between the plasma chamber

and the magnet, was designed, manufactured and tested.

To assess readiness of the TU EBBM for the coupling campaign, an acceptance test was run in the UC3M premises. The test included the following procedures:

- Ignition procedure: the TU can be ignited at its nominal working points. This procedure has been assessed with several repeatable ignitions in different days.
- Steady state procedure: The TU can be operated at steady-state with no limitations. This has been assessed through ignitions up to 10min to catch the steady state of the thruster.
- Gas compatibility procedure: The TU can be operated with different propellant gases. This has been assessed through different tests running with Xenon and Krypton.

After completion of this unitary tests, the TU was successfully coupled to the RFGPU.

B. The Radiofrequency Generation and Power Unit EBBM

The Radiofrequency Generation and power Unit comprises the electronic boards and RF elements required to condition power, generate and amplify the RF power to the thruster as well as to control the different elements in the system. It is designed, developed and tested by SENER at its premises in Tres Cantos. The different boards developed for the integration of the unit's EBBM are depicted in Fig. 5.

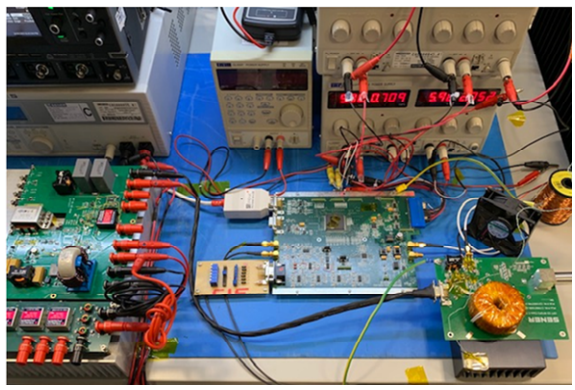

Fig. 5. RFGPU EBBM boards tested prior to integration for the coupling test with the TU.

The RFGPU comprises the following main elements:

- An Acquisition and Control Unit (ACU). It is the core of the RFGPU, which interfaces the spacecraft with the bus CAN and acquires the status (temperatures, frequency, power etc…) and commands the inputs for control the power injection to the TU.
- A Power Amplifier (PA). It generates the RF power (<500W) which is delivered to the TU via a coaxial feeder line. Interfaces the Acquisition and Control Unit (ACU) for frequency and duty cycle adjustment and the DC/DC for the power conversion.
- A DC/DC converter. The high-power DC/DC converter provides the adjustable supply voltage for RFGPU, determining the total power delivered by the thruster; it can be enabled or disabled by the controller unit (ACU), through a digital input.

All the different boards operation and functionality were tested at SENER laboratory before the coupling to the TU at UC3M test facility. The tests included the verification of the power management, the PA efficiency, the overall control and protections for its operation. The resulting overall RFGPU efficiency for this EBBM was above 90%.

C. The Propellant Flow Control Unit EBBM

Advanced Space Technologies (AST) is the company within the HIPATIA consortium in charge of developing the PFCU. For the first coupling test AST has planned to use a PFCU EBBM unit as shown in Fig. 6. The unit was designed and manufactured with additional fluidic interfaces compared to the AST baseline to have the maximum available monitoring capabilities and flexibility for the coupling test.

The PFCU design for HIPATIA is based on AST's High Pressure Flow Control Unit (HP-FCU). 428 customized units with HP-FCU design currently operate in LEO, providing a solid basis for HIPATIA PFCU. The basic HP-FCU model is a two-stage flow regulator unit, which reduces gas pressure from the tank of the spacecraft to a controlled pressure and translates it to the desired flow rate on the anode and cathode lines. HP-FCU is designed for inlet pressures up to 300 bar (450 bar proof) and outlet pressures up to 50 bar, depending on choice flow restrictor and

pressure sensor type and required flow range.

The main approach for HIPATIA PFCU is to integrate propellant control unit into EP as deep as possible, by adjusting it to the specific TU and subsystem requirements (e.g. absence of neutralizer line, alternative propellants) while maintaining the maximum flexibility and costs of the PFCU at minimum. Therefore, the PFCU design is simplified since pressure sensors can be omitted in case of closed-loop operation of thruster unit.

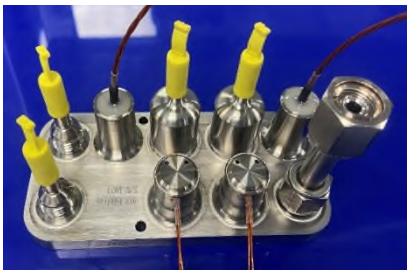

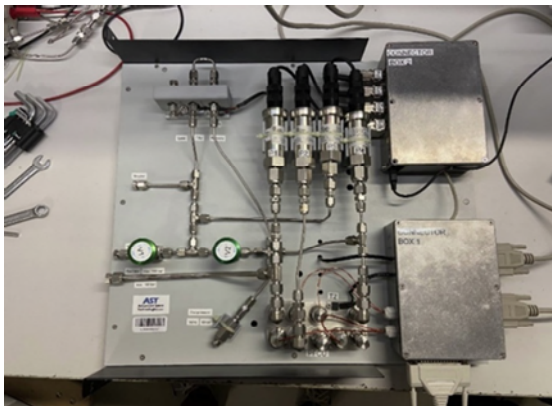

Fig. 6. Manufactured PFCU EBBM (left) and the EBBM within its coupling test setup (right).

In order to evaluate PFCU performance and to conduct coupling tests with the thruster the elegant breadboard model (EBBM) was manufactured. EBB model is used in order to access all flow parameters and support the development of the closed-loop control strategy. Furthermore, the EBB is complemented by AST's Electric Ground Support Equipment (EGSE), providing control of the PFCU during performance and coupling tests.

The required performance of the PFCU was verified through tests on the EBB. The test campaigns were conducted in 2021 at U3CM' and AST' facilities, the results been reported in [10].

IV. The first coupling test campaign

A. Scope and goals for the first coupling test campaign

The coupling test campaign for the EM/EBBMs of the HIPATIA system units started with pair couplings before the whole system was put together: (1) TU+RFGPU, (2) TU+PFCU, (3) RFGPU+PFCU and (4) TU+RFGPU+PFCU.

During the HIPATIA functional chain test the three units operated simultaneously for thruster firing and commanded through the subsystem control unit (in the RFGPU) via Remote Mode commands. The main goal of this functional chain test was to ensure interfaces and functional compatibility between the units in a laboratory environment, then assessing the TRL5 for the whole HIPATIA System. It was also important to assess the preliminary performances of the system, identifying possible gaps and enhancement areas. This served as an input for planning the development of new research activities in the frame of the project, but also to tune and improve the designs of the EQM units.

The results herein reported include the analysis of the response of all the units when operated in functional chain in addition to some of the main conclusions and gaps detected as part of the test.

- The monitoring of the thruster unit response for the coupling test includes the results coming from direct thrust measurements, which directly provide the propulsive performances of the system, the power monitoring (forward and SWR signal) at TU entry, and health status checks (temperature monitoring) that ensure the thruster is operating in safe and nominal conditions.
- The RFGPU provides the power to the TU but also commands the mass flow to the PFCU. For the scope of this first coupling test campaign, the operation of the RFGPU was carried out by using the Remote Control state, which enables the external user to control, monitor and command all the operations through the EGSE interface designed to that end. At this stage of the subsystem development, the interface to the PFCU was only limited to a voltage control signal that commands a proportional voltage to the mass flow rate, with values in the range 0-5V. With these values, the PFCU internally controls the mass flow rate to the desired value, with an internal driver control loop based on the low-pressure sensor feedback signal.
- The PFCU provides the required propellant mass flow to the TU. For the scope of the coupling test campaign,

the EBBM unit is mounted on a separated Fluidics Ground Support Equipment (FGSE), that provides interface to the RFGPU control signal and to the thruster unit inlet. To control the PFCU within the desired mass flow ranges through the RFGPU voltage control (open loop) a calibration is performed relating the mass flow rate with the low-pressure output (P3) of the PFCU and the input voltage from the RFGPU to the P3 pressure value.

B. Test results and outcomes

The functional chain test, including the three HIPATIA units (TU, PFCU, RFGPU) directly commanded through the test EGSE, was successfully run achieving TRL5 for the HIPATIA system. It was possible to control all units from direct commands to the RFGPU through the mentioned EGSE interface, monitoring and retrieving information for the posterior analysis.

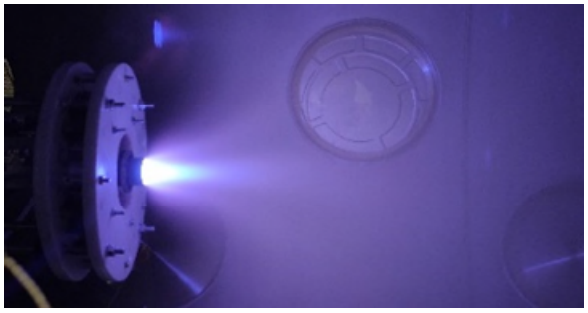

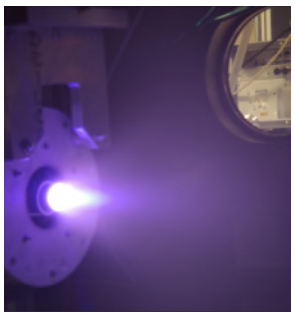

Fig. 7. TU-EBBM operating with Krypton on the thruster stand (left) and on the Thrust Balance (right) as part of the pre-test activities and the Coupling Test respectively.

During the test campaign several features were observed that could lead to design upgrades:

- The change in the power levels with the mass flow variation (impedance load change) suggest that a closed loop control is needed for that variable. The design of such feature has been considered in the detailed design of the system and the RFGPU.
- Several system responses were analysed in order to evaluate their suitability to control the PFCU without the need of pressure transducers.
- Changing the TU power levels affects the power transmission (due to a change of the plasma impedance). This could be controlled through autonomous operation with a frequency control strategy included as part of the RFGPU autonomous operation (manoeuvre mode).

These general outcomes have been further analysed and taken into account in the detailed design activities for the development of the units' EQMs. In addition to this kind of outcomes, the HIPATIA system propulsive performances were also assessed (Table 1). For this to be done, both plume characterisation probes and a thrust balance [11] were used.

Table 1. Propulsive performances obtained during the first HIPATIA test campaign (Xe).

Performance figures	
Power range	[200W, 450W]
Mass flow rate	[10sccm, 40sccm]
Thrust range	[3.4mN, 6.5mN]
Specific Impulse range	[115s, 380s]
Thrust efficiency	<2%

The results show a very low thrust efficiency, below 2%, with moderate thrust level, up to 6.5mN and low specific impulses, less than 400s. The increase of thrust with mass flow rate and power has been identified, as well as the increase of specific impulse with the reduction of propellant flow. This increase does not impact positively in the thrust efficiency, consequently, energy losses due to ionisation/excitation and plasma-wall interaction increases as well counteracting the aforementioned thrust gain. It has been pointed out that the current prototype magnetic field yields to a weaker plasma-wave power coupling, in comparison to former prototypes, which were tested at much lower mass flow rates with great success, with higher utilisation efficiencies, higher electron temperatures and higher ion

beam energies. The design upgrades conducting towards the EQM development take this into account, and further evolutions of the TU EBBMs were planned in order to test alternative design solutions to further improve performances.

V. Next steps

After the units development, the first coupling test campaign took place, including the system operation with Xenon and Krypton. Apart from these development and test activities, the research line in the project has worked in other activities related to the physics underlying the HIPATIA concept [12], that include the use of advanced diagnosis for plasma characterisation (such as LIF [13]) and the development of a 2D hybrid code for HPT simulation [14], among others.

Based on these outcomes, the project is now focusing on tuning the unitary designs for improving the system performances, the integration and test of the units EQMs. When completing the project at end 2022, the HIPATIA system and units are expected to achieve, at least, the TRL levels depicted in Table 2.

Table 2. Start and target TRLs for the HIPATIA system and units.

	System	TU	RFGPU	PFCU
Initial TRL	TRL3	TRL5	TRL4	TRL4
Target TRL	TRL5	TRL6	TRL5	TRL6

Currently, the project is concluding the AIT of the three different units' Engineering and Qualification Models (EQMs) that constitute the HIPATIA system. After unitary tests, the whole system will be assembled for the final coupling test. As an advance of the ongoing activities and the EQMs AIT, this paper includes some photographs of the recently assembled EQMs for the TU (Fig. 8) and the RFGPU (Fig. 9) and the design for the PFCU EQM (Fig. 10) that will join them in late summer 2022 for the second coupling test campaign.

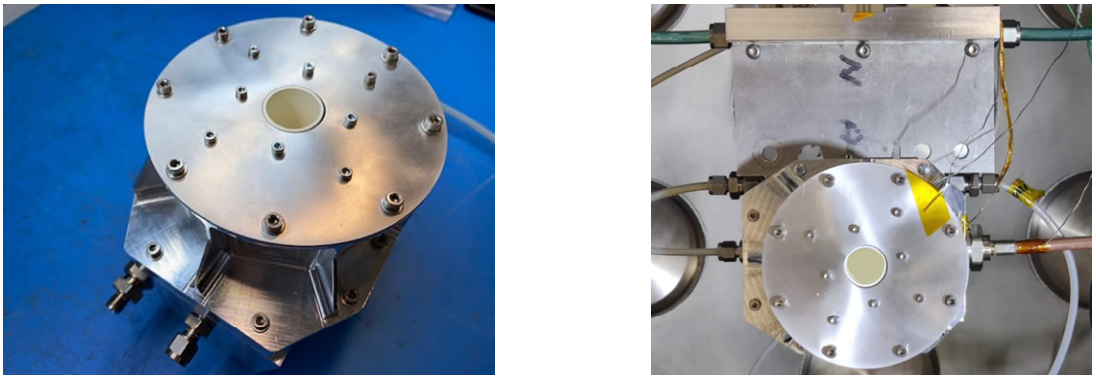

Fig. 8. TU EQM on the assembly table (left) and on the test stand (right).

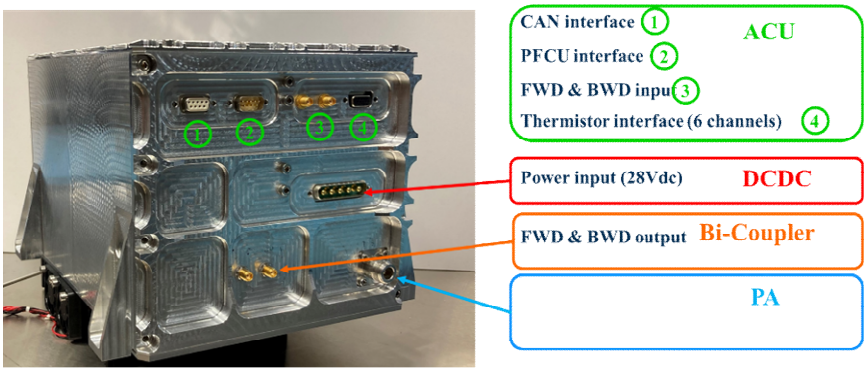

Fig. 9. RFGPU EM assembled, depicting the different interfaces and connectors.

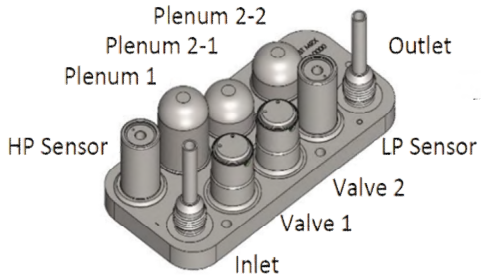

Fig. 10. PFCU open-loop EQM design.

VI. Conclusion

HIPATIA is an ambitious project developed by a strong consortium for advancing the development and verification of a propulsion subsystem based on the Helicon Plasma Thruster technology up to TRL 6 by end 2022.

The goal of verifying the function and performance of an integrated HPT based EP system is achieved in two steps, first at EBBM level, then at EQM level. The tests at EBBM level run in parallel and fertilise the analysis and design activities of the EQM units and system, following a de-risking approach. The inter-related activities of design - development and verification - testing are also supported by a continuous research activity including modelling and simulation, as well as laboratory tests.

When fulfilling the project's objectives, the consortium partners foresee additional developments and AIT assembly to complete the units and system qualification. In particular, life tests and ElectroMagnetic Compatibility (EMC) tests are not included in HIPATIA, neither some mechanical and thermal tests on PFCU and RFGPU. These delta AIT activities will require approximately one additional year after project conclusion to have the HIPATIA system ready to be qualified. Therefore, the team expects to deliver a prospectively cost-efficient propulsion subsystem to the small satellite market by end 2023.

Acknowledgment

This Project has received funding from the European Union's H2020 research and innovation programme under grant agreement No. 870542.

References

[1] Merino, M. et al., "Design and development of a 1kW-class helicon antenna thruster", *International Electric Propulsion Conference*, IEPC-2015-297, Hyogo-Kobe, 2015.

[2] Navarro-Cavallé, J. et al. "Experimental characterization of a 1 kW helicon plasma thruster". *Vacuum 149*, 2018, pp. 69–73.

[3] Ruiz, M., Gómez, V., Fajardo, P., Navarro-Cavallé, J., Albertoni, R., Dickeli, G., Vinci, A., Mazouffre, S., Hildebrand, N., "The HIPATIA project's initial development stages: setting the basis to bring the Helicon Plasma Thruster and its associated technologies to intermediate-high TRLs" *Space Propulsion Conference*, paper 421, virtual conference 2020.

[4] Takahashi, K. et al., "Radiofrequency antenna for suppression of parasitic discharges in a helicon plasma thruster experiment", *Review of Scientific Instruments*, August 2012.

[5] Pavarin, D. et al., "Experimental set-up to test a 50W Helicon Plasma Thruster", *International Electric Propulsion Conference,*, IEPC-2009-204, Ann Arbor, 2009.

[6] Phase Four, https://phasefour.io/maxwell/

[7] Bellomo, N., "REGULUS: Integration and Testing of an iodine Electric Propulsion System", *Space Propulsion Conference*, SP2020-00109, Virtual Conference, 2020.

[8] Ahedo, E., Merino, M., "On plasma detachment in propulsive magnetic nozzles", *Physics of Plasmas*, Vol. 18, No. 5, 2011.

[9] Gerwin, R.A. et al., "Characterization of plasma flow through magnetic nozzles", *LANL report* AL-TR-89-092, 1990.

[10] Gorvachev, S. et al, "Advances on cost-optimized high-pressure flow control unit within HIPATIA-project", *Space Propulsion Conference*, Estoril, 2022.

[11] Wijnen, M., Navarro-Cavallé, J. and Fajardo, P., "Mechanically Amplified mN Thrust Balance for Direct Thrust Measurements of Electric Thrusters for Space Propulsion," in *IEEE Trans. on Instr. and Measurement*, vol. 70, pp. 1-18, 2021.

[12] Vinci, S. Mazouffre, "Plasma properties conditioned by the magnetic throat location in a Helicon plasma device", *Journal of Applied Physics* 130, 183301 (2021).

[13] Vinci A., Mazouffre, S., Gómez, V., Fajardo, P. and Navarro-Cavallé, J. "Laser-induced fluorescence spectroscopy on xenon atoms and ions in the magnetic nozzle of a Helicon plasma thruster" Submitted to *Plasma Sources Sci. Technol.*.

[14] Zhou, J., Pérez-Grande, D., Fajardo, P. and Ahedo, E., "Numerical treatment of a magnetised electron fluid within an electromagnetic plasma thruster code", *Plasma Sources Science and Technology*, Vol. 28, No. 11, 2019, p.115004.