HAL open science

About the Mapping of Personal Practice Paths in the ATD

Jany Goulart, Hamid Chaachoua, Luiz Márcio Santos Farias, Avenilde Romo Vázquez

To cite this version:

Jany Goulart, Hamid Chaachoua, Luiz Márcio Santos Farias, Avenilde Romo Vázquez. About the Mapping of Personal Practice Paths in the ATD. CITAD 7, Jun 2022, Bellaterra, Spain. hal-03747009

HAL Id: hal-03747009

https://hal.science/hal-03747009v1

Submitted on 6 Aug 2022

HAL is a multi-disciplinary open access archive for the deposit and dissemination of scientific research documents, whether they are published or not. The documents may come from teaching and research institutions in France or abroad, or from public or private research centers.

L'archive ouverte pluridisciplinaire **HAL**, est destinée au dépôt et à la diffusion de documents scientifiques de niveau recherche, publiés ou non, émanant des établissements d'enseignement et de recherche français ou étrangers, des laboratoires publics ou privés.

About the Mapping of Personal Practice Paths in the ATD

Jany Goulart[1], Hamid Chaachoua[2], Luiz Márcio Farias[3] and Avenilde Romo-Vázquez[4]

[1]DEXA, State University of Feira de Santana, Brazil; jssgoulart@uefs.br

[2]LIG, University of Grenoble Alpes, France; Hamid.Chaachoua@imag.fr

[3]IHAC, Federal University of Bahia, Brazil; lmsfarias@ufba.br

[4]Department of Educational Mathematics, Cinvestav, Mexico; avenilderv@yahoo.com.mx

Abstract. *By studying the personal work of the students, we introduced the notion of Personal Practice Paths, idealized from the conception of personal praxeologies and praxeological recombination outlined by the praxeological dynamics inherent to the task resolution process. The study was done with students of a mathematics teaching degree course from a Brazilian university. As a methodological approach, we adopted a link-up between didactic engineering and ATD concepts, which allowed us to think about the emergence of a new dialectic that underlies the firstfruits of the Personal Study and Research Paths.*

Keywords: Anthropological theory of didactics, personal praxeologies, personal practice paths.

Résumé. *En étudiant le travail personnel des étudiants, nous avons introduit la notion de Chemins de Pratiques Personnels idéalisés à partir de la conception de praxéologies personnelles et de recombinaisons praxéologiques esquissées par la dynamique praxéologique inhérente au processus de résolution des tâches. L'étude avait pour protagonistes des étudiants d'un cours de licence en mathématiques d'une université brésilienne. Comme voie méthodologique, nous avons adopté la jonction entre l'ingénierie didactique et des concepts de la TAD, ce qui nous a permis de penser à l'émergence d'une nouvelle dialectique qui fonde les prémices des parcours d'étude et de recherche personnels.*

*Mots clés**:** Théorie anthropologique du didactique, praxéologies personnelles, chemins de pratiques personnels.*

Resumen. *Estudiando el trabajo personal de los estudiantes introdujimos la noción de Caminos de Prácticas Personales idealizados a partir de la concepción de las praxeologías personales y de las recombinaciones praxeológicas esbozadas por la dinámica praxeológica inherente al proceso de resolución de tareas. El estudio tuvo como protagonistas a estudiantes de un curso de licenciatura en matemáticas de una universidad brasileña. Como camino metodológico, se adoptó el cruce entre la ingeniería didáctica de los conceptos de la TAD, lo que permitió pensar en el surgimiento de una nueva dialéctica que funda los inicios de los Caminos de Estudio e Investigación Personal.*

Palabras clave: Teoría antropológica, de lo didáctico, praxeologías personales, caminos de prácticas personales.

Introduction.

This text aims to create a scenario that stimulates theoretical discussions on elements that emerged in the development of the doctoral thesis[1].The core of the investigation consisted of highlighting the functioning and use of the Hybrid Learning Environment (HLE), as a didactic device (CHEVALLARD, 2002), immersed in a context that involves the teaching and learning of vector algebra within the scope of a mathematics teaching degree course of a Brazilian university.

One of the pillars on which the research was based corresponds to the conception of Chevallard (1996), who highlights changes in personal relationships with object *O,* which, consequently, results in learning. In these terms, we assumed that personal relationships, in interaction with the object of knowledge, produce changes in the subjects' praxeological baggage, resulting in changes in the student's praxeological equipment (CHEVALLARD, 2009).

In the same sense, Chevallard (2007, p. 4) clarifies that "personal and institutional relations are linked to the study of deformations, reforms, and transformative formations, notably by the generalization of the notion of didactic transposition and the notion of institutional transposition", which reveals an institutional configuration that must be analyzed under different study levels.

From this perspective, we stimulated changes through actions produced within the HLE, which we defined as a space consisting of a variety of *media*[2] that enabled a transit between different *media* that were linked to the transformations in the *milieu.* In addition, Goulart and Farias (2018) consider that by providing students with various media - different from conventional ones -, we can integrate a flexible approach (DREYFUS, 1991) to the detriment of mathematical rigidity (SILVA *et al.*, 1999). This, we intended to identify, implement, and formalize a kind of complementation of teaching tools in the vector context, amalgamating new ones to existing ones.

For this, we used methodologically some phases of didactic engineering (ARTIGUE, 1996) mixed with ATD concepts formalized in T4TEL (CHAACHOUA, 2018) through the Task Type Generators – (Geradores de Tipo de Tarefa – GT), which had its Variable System fed by different combinations of the Didactic Devices {Manipulable Materials - MM, Pencil Paper - PP, GeoGebra - GG} from the HLE.

It is relevant to highlight that the GTs are determined by a type of task and a system of variables. For Chaachoua and Bessot (2016), this new object allows structuring a set of types of tasks for research purposes. In this perspective, a GT has the following configuration: GT = [Action Verb; Fixed Complement; System of Variables]. Note that (Action Verb; Fixed Complement) define a type of task T, so we can note GT: [T; SV]. Thus, we undertake the metaphorical interpretation that Task Type Generators GT act as a "machine" that produces types of tasks, in which the Hybrid Learning Environment provided "fuel" for operational functioning in interaction with the media, similar to the

---

[1] A didactic proposal for teaching vector algebra based on the T4TEL model in the context of a Hybrid Learning Environment – HLE

[2] See Chevallard (2007).

Media Milieu Dialectic (CHEVALLARD, 2007), regulated by the values of the variables inherent to the nature of each Didactic Device {MM, PP, GG}.

From this context, Kaspary (2020, p. 268) proposes the Task Type Subgenerators denoted by: "Let GT: [T, SV] and GT': [T', SV']. GT' is a GT task type subgenerator of GT tasks if T' ⊆ T e SV' ⊆ SV." Thus, we had to be aware of the behavior of a potential learning path conducted by the values of the variables at the core of the GT. Based on those elements, it was feasible to discuss the specificities of an a priori analysis, aimed at predicting which techniques $\tau_1, \tau_2, \dots, \tau_n$ the students would employ during the resolutions of a given type of task *T*.

During experimentation, we felt the need to fragment the analyses into three levels, general, partial, and individual. The first level was revealed through a broader configuration in terms of the praxeologies (CHEVALLARD, 1998) of the student groups. However, at the partial level, we reduced our scope, and focused on some students' personal praxeologies (CROSET & CHAACHOUA, 2016). On the individual scale, we sought greater detail in the resolution of a task presented by a student that evoked developments to theorize about the Personal Practice Paths - PPP and therefore idealize the *Individual-Individual Dialectic*, which can be added to the range of Dialectics or "gestures of study and investigation" (CHEVALLARD, 2007) in the organization of the specific actions that lead the Study and Research Paths – SRP and or Personal Study and Research Paths - PSRP.

The PSRP allow an individualized analysis based on the choices and productions of a student facing a generating question Q_0. In this way, more accurate identification possibilities open up, as if we were putting a lens on implicit elements, which will compose a more reliable description of the PPP, since, in general, the minutiae are not fully revealed in group work.

Personal Practice Paths – PPP.

Before defining what we conceive as PPP, we initially proposed what Chevallard (1996, p. 117) signaled: "thought develops based on metaphors (…). It is not, therefore, a priori, in any way illegitimate to think about theories and models in terms of image and representation." In these terms, we will use some analogies to communicate the essence of what we design as PPP preliminarily.

First, we established the following analogy: Personal Practice Paths generate opportunities for researchers and teachers to assume attributions that resemble football game analysts because, from an attentive observation, they identify and unravel the specificities of strategies in the executions of each bid or play, i.e., they aim to determine why and how actions happen during the game (task resolution).

That said, we aimed to understand the strengths and weaknesses (conditions and restrictions) of the teams (group of students), a portion of the team (part of this group) or a player (student) in particular, which refers to the different levels of analysis: general, partial, and individual so that we can establish more robust and consistent game strategies (task resolution).

Moreover, personal praxeologies (CROSET & CHAACHOUA, 2016) are built within one or more institutions according to different dynamics, as underlined by Kaspary, Chaachoua, and Bessot (2018). From this conception, confronting a task t belonging to a specific type of task T allows the student to evoke techniques (τ_i), $i = 1, 2, \dots, n$, and implement them without difficulties if T is a type

of family/routine task for him/her. However, if the type of task T is not immersed in the usual praxeological repertoire of this subject, the accomplishment of this task can go through several attempts of adaptations, mobilizing techniques (τ_i), $i = 1, 2, \dots, n$, that may not lead to the effective management of calculations until an eventual association with a technique with potential adequacy[3] arises.

As an example, imagine that the task *t: Show that if M and N are midpoints of the segments AC and BC, respectively, then |AB|=2|MN|*, was proposed to two students. As depicted in Figure 1,

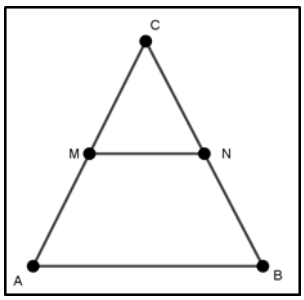

Figure 1: Triangle ABC

The first, making use of vector algebra presented the following resolution:

$$\overrightarrow{MN} = \overrightarrow{MA} + \overrightarrow{AB} + \overrightarrow{BN} = \frac{1}{2}\overrightarrow{CA} + \overrightarrow{AB} + \frac{1}{2}\overrightarrow{BC} = \frac{1}{2}(\overrightarrow{CA} + \overrightarrow{BC}) + \overrightarrow{AB} =$$

$$\frac{1}{2}(\overrightarrow{BC} + \overrightarrow{CA}) + \overrightarrow{AB} = \frac{1}{2}\overrightarrow{BA} + \overrightarrow{AB} = -\frac{1}{2}\overrightarrow{AB} + \overrightarrow{AB} = (1 - \frac{1}{2})\overrightarrow{AB} = \frac{1}{2}\overrightarrow{AB}.$$

Then, $|\overrightarrow{MN}| = \left|\frac{1}{2}\overrightarrow{AB}\right| = \frac{1}{2}|\overrightarrow{AB}|$, i.e., $|AB| = 2|MN|$.

Thus, the technique can be described as: (vector sum), (midpoint), (vector multiplication by scalar), (distributive property), (opposite vector).

While, the second student resorted to the concepts of plane geometry, presented in resolving terms:

$$\frac{|AB|}{|MN|} = \frac{|CA|}{|MA|} = 2\frac{|MA|}{|MA|} = 2, \text{ i.e., } |AB| = 2|MN|$$

In these terms, the description of the technique is: (similarity of triangles) and (notion of midpoint). This aspect dialogues directly with Chaachoua and Bessot (2016, p. 3) conception, in the theoretical framework "T4TEL, a technique is defined as a sequence of task types". These authors also signal that: "The scope of a technique τ is the set of tasks performed by τ, denoted by P(τ)." (CHAACHOUA & BESSOT, 2018, p. 121).

From this perspective, the process can be described as a set of techniques according to the time of the praxeological construction (CHEVALLARD, 2009) and modeled through the Personal Practical Paths related to a task t_i: $PPP\ (t_i) = \{\tau_{i_1}, \tau_{i_2}\ \tau_{i_3}, \dots, \tau_{i_k}\}$, as was addressed in the Goulart (2021), by linking all stages of the resolution process managed by the student or better, of his/her praxis(t_i, τ_{i_k}).

[3] The term "adequacy" means that the student judges that the technique allows solving the task in a way that is consistent with what the institution demands.

This sequence of techniques, in association with their ingredients and gestures, connects to the conception of dynamics of the personal praxeological constructions and one of the forms of praxeological recombination in which a logos is maintained, but the praxis is modified $(\Pi^*) \oplus \Lambda$ (CHEVALLARD, 2018). This allowed us to characterize this trajectory as the union of all the techniques used to achieve a solution for t_i, i.e., $\bigcup_{k=1}^{n_i}(t_i, \tau_{ik})$ in which a task is fixed (t_i) and the techniques undergo variations.

We infer that the student can find other tasks (t_i) of a given type T in which the same or different techniques are mobilized to generate approximations or achieve the result expected by the institution. Hence, we reveal the modeling of the Personal Practice Paths for a given type of task T: PPP(T) = $\bigcup_{i=1}^{m} \bigcup_{k=1}^{n_i}(t_i, \tau_k)$, as illustrated in Figure 2:

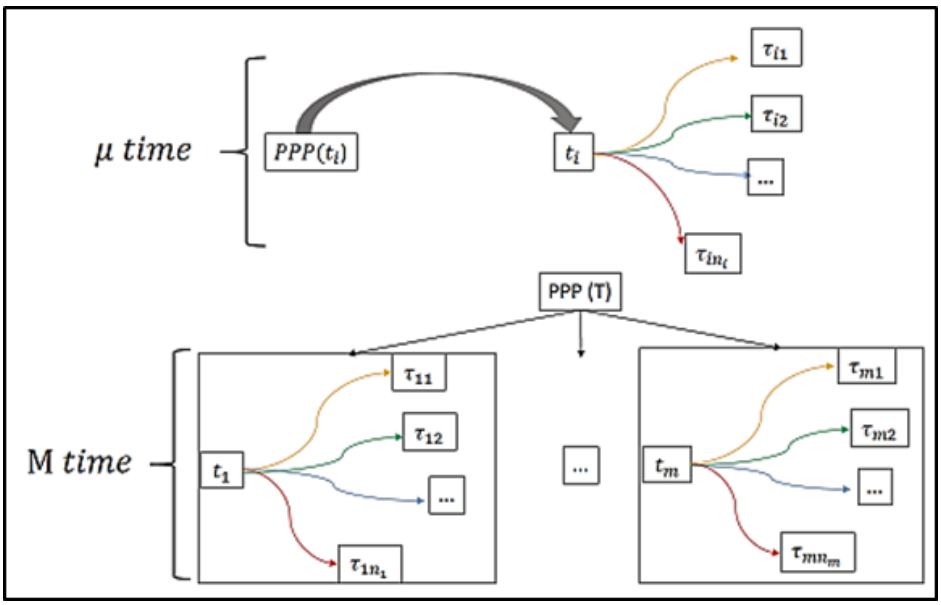

Figure 2: Personal Practice Paths PPP ($_{ti}$) or PPP (T)

It is equivalent to saying that this idea joins the conception of praxeological dynamics described by Kaspary, Chaachoua, and Bessot (2020), which made us conceive that the processes that come from the PPPs behave analogously to "a sequencing of photos" recorded at different times. These alternations of images allow the researcher to observe the process of praxeological movement or transit at different times ($\mu\ tempo$) or longer time intervals ($M\ tempo$) associated with task types T.

This also makes us infer that the PPP can be modeled taking as influence and inspiration the definition of mathematical sequence (finite) defined as a function $f: \mathbb{N}' \subset \mathbb{N} \longrightarrow \mathbb{R}^q$, with a finite $\mathbb{N}'$, which, to each natural number $n \in \mathbb{N}'$, associates q-duple of real numbers $f(n)$. In our case, having fixed a task t_j, at each instant μ_i there is a relation with a given number of techniques described in terms of praxeological variations that occur in the management of the calculations performed by the students.

Thus, in the search for the details inherent to the students' praxelogical repertoire, ostensibly communicated by different techniques used in the resolution of tasks, a resolutive work was fostered through the GT, which made it possible to identify the existence of the PPPs, from the perspective of a more refined observation lens. Schematically, as in Figure 3:

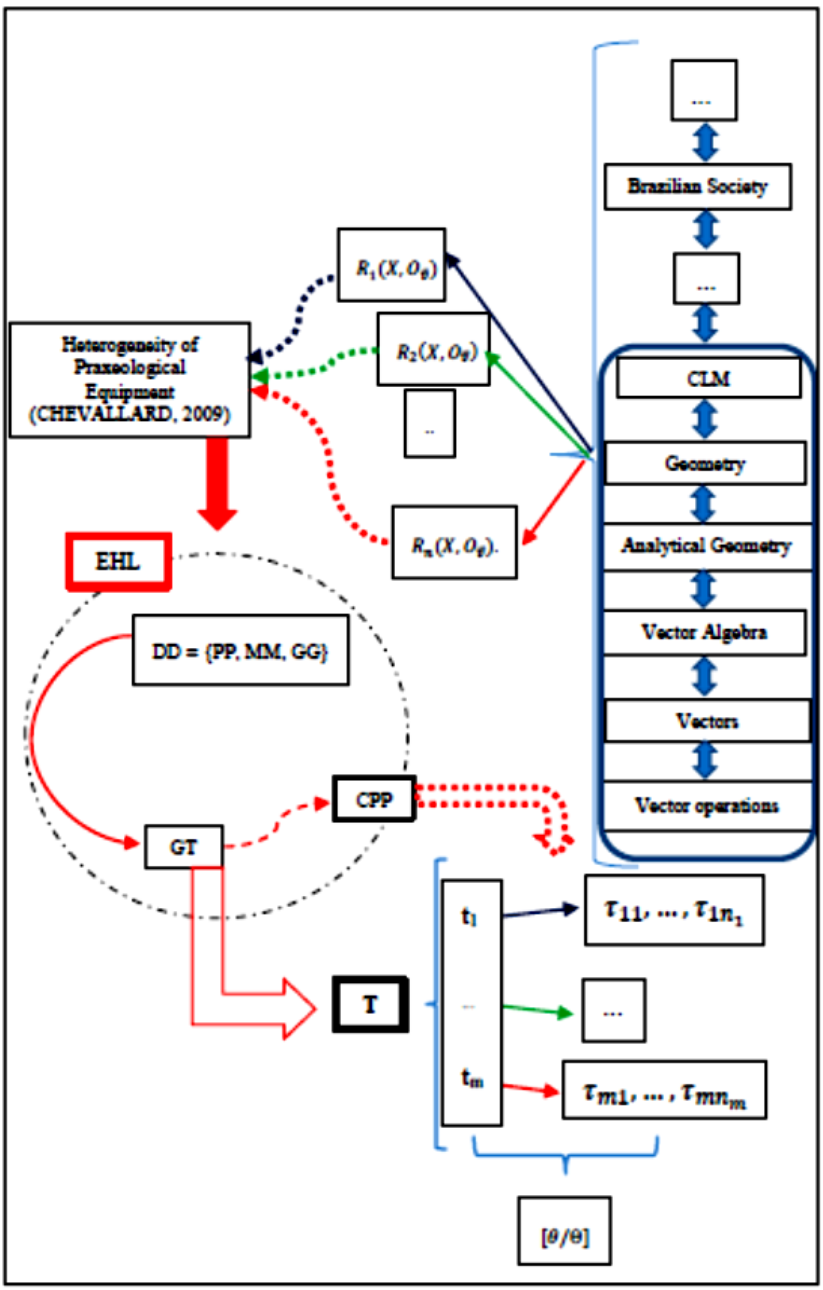

Figure 3: Design of the interconnections between research elements

An excerpt of the experimentation.

The experimental aspects of the research will not be fully described. However, we will provide elements that will lead the reader to overview the directions of the investigation. The example dealt with in this text consists of a vectorial task, managed, and solved by some students, according to techniques characterized by didactic devices[4], in this case, Manipulable Materials – MM with records

[4] Didactic devices materialize techniques (CHEVALLARD, 2002, p.2)

on Pencil Paper – PP. However, due to space limitation, we will not report the students' productions related to the GeoGebra – GG software and the exclusive use of PP, in favor or denser descriptions of the techniques used in each resolution.

At this stage, mini-courses were recommended and developed for the study of vectors contextualized through tasks that integrated the Numerical, Algebraic and Geometric domains – NAG (FARIAS, 2010). So, students were invited to participate in this didactic endeavor. We offered twenty vacancies, of which eighteen were filled, and held the meetings off-shift. It is noteworthy that vector algebra is part of the curricular component Analytical Geometry syllabus that makes up the 2nd-semester grid of the teaching degree course.

We then designed a Didactic Organization as described by Goulart (2021), in terms of the arrangement of the variables $V_1 = \{GG, MM, PP\}$, through the devices established in the course with its derivations and branches, as summarized in Figure 4.

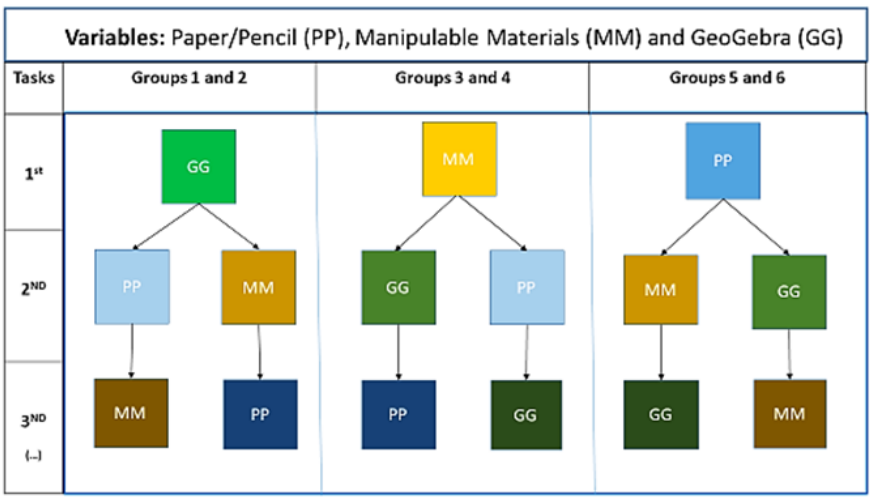

Figure 4: Drawing of the arrangements of the variables in terms of the devices

From this outline, there was a structuring, revealed due to transformations that reflected in the expansion of the number of tasks, which required different techniques because, as Chevallard (1989, p.93) indicates, we are generally limited to a "small number of techniques recognized institutionally, excluding possible alternative techniques (...)".

In favor of these alternative techniques, we presented tasks to students that dealt in essence with vectors, Mathematical Organization - OM, which, according to Costa, Arlego, and Otero (2015, p. 146), "provides students with basic and indispensable tools to model several physical events mathematically". Beyond the physical phenomena, the vector calculus or the vector algebra, in their different nuances, reverberates in other mathematical domains.

As a result, we can assume that a rupture emerges with something that is disseminated in the institutional scope, because "instead of confronting the student with a type of task for which there are several techniques, the institution organizes the study through several types of tasks for which there

is only one technique." (CHAACHOUA, 2010, p. 6, our translation[5]), i.e., students should recognize to which type of tasks they belong and what techniques are pertinent to use to obtain an answer accepted or not by the institution.

That said, in this text, our attention will turn to task 5, as denoted in the Goulart (2021). Beyond managing calculations developed by the students, in agreement with the institution, we will consider the ostensives of departure, development, and arrival, according to a given time ($\mu\ tempo$) of observation and analysis, which made us reflect and assume as inspiration to theorize the PPPs. Thus, it was a task that presents in its approach vectors in space, usually denoted by R^3, with the following statement de t_5: *In the ABCD tetrahedron, E is the midpoint of the DC segment, and F satisfies* $\overrightarrow{BF} = \frac{1}{4}\overrightarrow{BE}$. *Suppose* $\vec{a} = \overrightarrow{AB}$; , $\vec{b} = \overrightarrow{AC}$ *e* $\vec{c} = \overrightarrow{AD}$. *Get* $\overrightarrow{AF}$ *as a linear combination of* $\vec{a}$, $\vec{b}$ *and* $\vec{c}$.

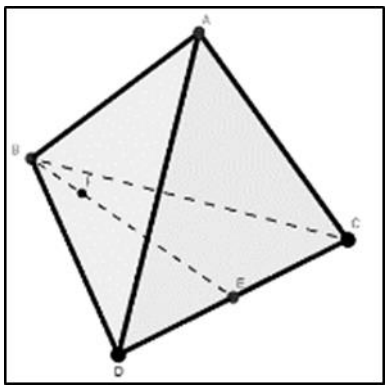

Figure 5: Representation that integrates the statement of task 5

We will highlight the Task Type Subgenerator (KASPARY, 2020) that derived from GT_{t5} =*[Get; a vector as a linear combination of a base;*V_1,V_2, V_3, V_4,V_5,V_6,V_7*]*[6], which guided the production of tasks according to the value assumed by each variable, in line with the devices, proposing conditions to the environment (*milieu*) to promote articulations between vector concepts and properties with manipulative techniques that triggered changes in the personal relationships of the subjects in interaction with vectors.
Thus, $G'T_{t5(MM)}$ as described in Table 1:

Table 1. Task Type Subgenerator $\mathbf{G'T_{t5(MM)}}$

$G'T_{t5(MM)}$ = $[Obter;\ um\ vetor\ como\ combinação\ linear\ de\ uma\ base\ \ em\ MM;\ V_2, V_3, V_6, V_7]$			
V_2 - *Nature of MM (straws, elastics, strings, EVA, among others).*	V_3- *Auxiliary instruments aggregated to MM (scissors, glue, studs, Styrofoam plate, etc.).*	V_6- *Available PP instruments (ruler, squares, millimeter squared paper, etc.).*	V_7- *Configuration (plane, space, rectangular, triangular, ...).*

[5] Ainsi, plutôt que de confronter l 'elève à un type de tâches pour lequel il existe plusieurs techniques, l 'institution organise l'étude à travers plusieurs types de tâche pour lesquels il y a une seule technique.

[6] See Goulart (2021)

At this stage, the productions should reproduce a tetrahedron in a tangible environment, to then obtain $\overrightarrow{AF}$, which alters the material instantiation of this object. This allowed us to observe that the variable V_7 assumes another value since even the previous questions were developed in the plan, i.e., a change in the configuration. Thus, the attention turns to alternating images by sequencing some records evidenced in excerpts from a student's production, as shown in Figure 6,

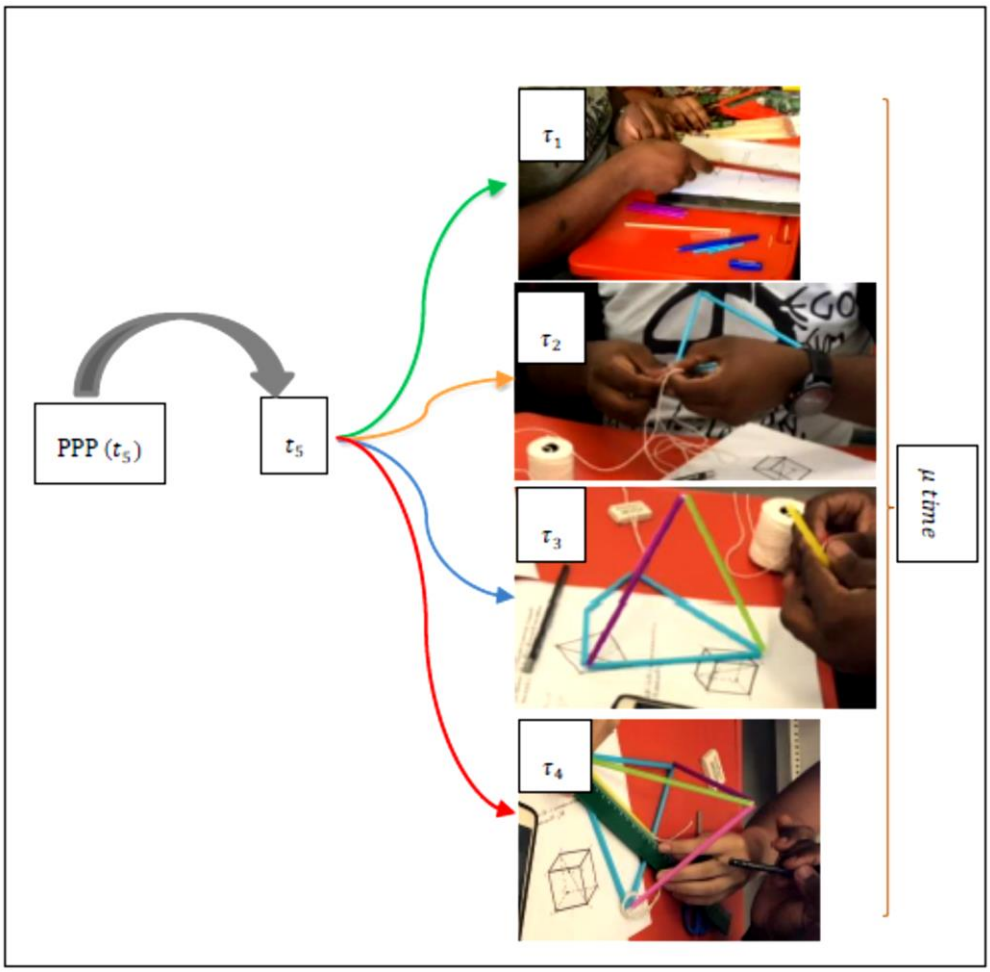

Figure 5: Characteristic elements of the PPP$_{(t_i)}$ in terms of μ_{tempo}

Thus, we infer that PPPs allow regulating the levels of praxeological analyses according to a given time fraction *(micro - μ or macro -M)*, in accordance with the research motivations. However, it is relevant to point out that this exemplification is presented as a fragment of the entire process and that the adjustments of the model dialogue directly with the objectives that the researcher aims to achieve. In summary, when observing the images, it is possible to undertake some interpretations: at the moment $\mu\tau_1$, we can note elements specific to one of the moments of study specified by Chevallard et al. (2001). In $\mu\tau_2$, we can observe the representation of one of the triangles that make up the tetrahedron. Yet, in $\mu\tau_3$, a three-dimensional prototype appears and in $\mu\tau_4$ there is a need to use the ruler and pencil paper belonging to V_6, as shown in Table 1.

In these terms, it is feasible to verify that the time interval of observations records appears as another variable that will allow regulating, calibrating, or tuning the objectives inherent to the investigation with the records of the ostensive changes observed in the images, which enable us to achieve details that are not always reached when we examine the extremes (departure and arrival) of a resolution.

Emergence of some developments for research in Didactics.

From the PPP, we glimpse one more theoretical element that will certainly contribute to future studies in the context of Didactics. It is a gesture of study conceived as an *Individual-Individual Dialectic*, which has as its conceptual inspiration the reflexive property of the relation of equipolence between oriented segments that can constitute one of the levels of analysis of the PPP, which can be characterized as a solitary moment of knowledge production of the (student ~ student) in line with the Dialectic of the Individual and Collective as in the dialogue for the construction of personal (CROSET & CHAACHOUA, 2016) and group praxeologies.

In this sense, we see the possibility of Study and Research Paths that contemplate the personal and individual aspect of a subject, in particular, returning to the metaphor that contributed to the characterization of our investigative design as an analysis of the performance of a single player in a soccer match. We think that by having access to the instants of personal praxeologies that occur according to specific dynamics when solving a task, it is possible to examine thoroughly how students manage their calculations, i.e., it will be feasible to describe the current state of their praxeological equipment when faced with certain types of tasks – *T*, which will allow the identification of problematic points that restrict an "adequate" resolution process. This consists of presenting to the student strategies that will enable the player (student) to develop actions that result in "goal" (good resolution management). Once this is done, it will facilitate the insertion of themes, subjects or contents that are not yet part of the subject's praxeological baggage. We also cannot forget that the change in techniques is reflected in the evolution of the technological aspect characterized as a strong point of the study.

Therefore, this study reinforces that the ATD is a theory that allows developments, motivated by new questions and by connexions with other theoretical frameworks such as T4TEL (CHAACHOUA, 2018) contributing to a broader understanding of didactic phenomena.

References

Artigue, M. (1996). Engenharia Didática. *In*: Brun, J. *Didática das Matemáticas.* Tradução Maria José Figueiredo. Lisboa: Instituto Piaget. p. 193-217.

Chaachoua, H. (1998). Géométrie dans l'espace. Le point sur la lecture des dessins pour les élèves en fin de collège. *Petit x*, (48), 37–68, 1998.

Chaachoua, H.; Bessot, A.(2016). Introduction de la notion de variable dans le modele praxéologique. *Congrès pour la Théorie Anthropologique du Didactique,* 5. 2016, Espagne. Atas [...]. Castro-Urdiales, Espagne, 2016.

Chaachoua, H. (2010). La praxéologie comme modèle didactique pour la problématique EIAH. Etude de cas: la modélisation des connaissances des élèves. *Séminaire National de Didactique Des Mathématique.* Paris, France. p. 82. https://hal.archives-ouvertes.fr/hal-01282325/documen.

Chaachoua, H. (2018). T4TEL un cadre de référence didactique pour la conception des EIAH. *In: Séminaire de Didactique des Mathématiques de L'ardm. 2018. Atas* [...]. Paris. (pp. 5-22). https://ardm.eu/wp-content/uploads/2018/10/Préactes-ARDM-fevrier2018.

Chaachoua, H., & Bessot, A. (2018). A noção de variável no modelo praxeológico. *In*: *A Teoria Antropológica do Didático: princípios e fundamentos.* Almouloud, S. A.; Farias, L. M. S.; Henriques, A. (org.). Curitiba: CVR. p. 119-133.

Chevallard, Y. (1996). Conceitos Fundamentais da Didática: as perspectivas trazidas por uma abordagem antropológica. In: Brun, J. *Didática das Matemáticas*. Tradução Maria José Figueiredo. Lisboa: Instituto Piaget, 1996.

Chevallard, Y. (1998). Analyse des pratiques enseignantes et didactique des mathématiques: l'approche anthropologique. In: L'UNIVERSITE D'ETE, 1998, p. 91-118. *Actes* [...]. Clermont-Ferrand, France: IREM. http://yves.chevallard.free.fr/spip/spip/IMG/pdf/Analyse_des_pratiques_enseignantes.pdf.

Chevallard, Y. *et al*. (2001). *Estudar Matemática: o elo perdido entre o ensino e a aprendizagem.* Tradução Daisy Vaz de Moraes. Porto Alegre: Artes Médicas.

Chevallard, Y. (2002). Nouveaux dispositifs didactiques au collège et au lycée: raisons d'être, fonctions, devenir. Communication aux *Journées de la commission inter-IREM Didactique.* Paru dans les actes correspondants (pp. p.1-26). IREM, Dijon.

Chevallard, Y. (2007). Passé et Présent de la Théorie Anthropologique du Didactique. En L. Ruiz-Higueras, A. Estepa y F. J. García (eds.), *Sociedad, Escuela y Matemáticas. Aportaciones de la Teoría Antropológica de la Didáctico* (pp. 705-746). Universidad de Jaén, http://yves.chevallard.free.fr/spip/spip/article.php3?id_article=134.

Chevallard, Y. (2009). Théorie Anthopologique du Didactique & Ingénierie Didactique du Développement. In: *Journal du Seminaire TAD/IDD – 3*; pp. 1-39. <http://yves.chevallard.free.fr/spip/spip/IMG/pdf/journal-tad-idd-2009-2010-3.pdf>.

Croset, M. C. & Chaachoua, H.(2016). Une réponse à la prise en compte de l'apprenant dans la TAD: la praxéologie personnelle. *Recherches en Didactique des Mathématiques,* Grenoble, 36-2.

Costa, V. A., Arlego, M., & Otero, M.R. (2015). Las dialécticas en un Recorrido de Estudio e Investigación para la enseñanza del Cálculo Vectorial en la Universidad. *Revista de Formación e Innovación Educativa Universitaria. 8*(3), 146-161,.

Dreyfus, T. (1991). Advanced mathematical thinking processes. In: TALL, D. (ed.). *Advanced mathematical thinking* (pp. 25-41.. Dordrecht: Kluwer.

Farias, L. M. S. (2010). *Étude des interrelations entre les domaines numérique, algébrique et géométrique dans l'enseignement des mathématiques au secondaire: une analyse des pratiques*

enseignantes en classes de troisième et de seconde. Tese (Doutorado) – Universidade de Montpellier 2, France.

Goulart, J. S. S.; Farias, L. M. S. (2018). Um diálogo sobre a Teoria Antropológica do Didático – TAD intermediado por um curso introdutório sobre os vetores. *Educação Matemática Pesquisa: Revista do Programa de Estudos Pós-Graduados em Educação Matemática, 20*(3) jan. http://revistas.pucsp.br/emp/article/view/40111.

Goulart, J. S. S. (2021). *Uma proposta didática para o ensino da álgebra vetorial fundamentada pelo modelo T4TEL no contexto de um ambiente híbrido de aprendizagem.* Tese (Doutorado) Universidade Federal da Bahia em covênio com a Universidade Estadual de Feira de Santana.

Kaspary, D. (2020). *La noosphère, un lieu de tension pour le curriculum: étude didactique de la mise en place d'un système d'évaluation de manuels scolaires sur l'étude du champ additif à l'école primaire.* Université Grenoble Alpes; Thèse de doctorat. Universidade Federal de Mato Grosso do Sul, 2020. Français. https://hal.archives-ouvertes.fr/tel-03100691/.

Kaspary, D. *et al*.(2020). Ou apporte la Notion de Portee d'une Technique a l'etude de la Dynamique Praxeologioue. *Annales de Didactique et de Sciences cognitves* , vol. 25 p.243-269.

Silva, A. *et al*. (1999). O Currículo de Matemática e as Actividades de Investigação. In: Abrantes, P.; Ponte, H. Fonseca; L. Brunheira (org.). *Investigações matemáticas na aula e no currículo* (pp. 69-85.). Lisboa: APM e Projeto MPT.