HAL open science

Potable water production by membrane processes: membrane characterization using a series of bacterial strains

Nathalie Lebleu, Christine Roques, Pierre Aimar, Christel Causserand

To cite this version:

Nathalie Lebleu, Christine Roques, Pierre Aimar, Christel Causserand. Potable water production by membrane processes: membrane characterization using a series of bacterial strains. Water Science and Technology: Water Supply, 2009, vol. 9 (n° 4), pp. 405-412. 10.2166/WS.2009.499 . hal-03562680

HAL Id: hal-03562680

https://hal.science/hal-03562680v1

Submitted on 9 Feb 2022

HAL is a multi-disciplinary open access archive for the deposit and dissemination of scientific research documents, whether they are published or not. The documents may come from teaching and research institutions in France or abroad, or from public or private research centers.

L'archive ouverte pluridisciplinaire **HAL**, est destinée au dépôt et à la diffusion de documents scientifiques de niveau recherche, publiés ou non, émanant des établissements d'enseignement et de recherche français ou étrangers, des laboratoires publics ou privés.

Open Archive Toulouse Archive Ouverte (OATAO)
OATAO is an open access repository that collects the work of Toulouse researchers and makes it freely available over the web where possible.

This is an author-deposited version published in: http://oatao.univ-toulouse.fr/
Eprints ID: 6207

To link to this article: DOI:10.2166/WS.2009.499
URL: http://dx.doi.org/10.2166/WS.2009.499

To cite this version: Lebleu, Nathalie and Roques, Christine and Aimar, Pierre and Causserand, Christel (2009) Potable water production by membrane processes: membrane characterization using a series of bacterial strains. *Water Science and Technology: Water Supply*, vol. 9 (n°4). pp. 405-412. ISSN 1606-9749

Any correspondence concerning this service should be sent to the repository administrator: staff-oatao@listes.diff.inp-toulouse.fr

Potable water production by membrane processes: membrane characterization using a series of bacterial strains

N. Lebleu, C. Roques, P. Aimar and C. Causserand

ABSTRACT

The aim of this study was to develop a method for characterizing membranes (ultrafiltration and microfiltration) used in drinking water production. The method accounts for the specific behaviour of microorganisms during filtration, namely their deformation under mechanical stress. The leaks of microorganisms are linked to the presence of a small number of defects or abnormally large pores in the membrane structure. Assuming that the defects are cylindrical capillaries, the range of pore diameters concerned by the method lies between 0.05 and 1.2 μm.

Key words | bacterial removal, membrane characterization, potable water production

N. Lebleu
P. Aimar (corresponding author)
C. Causserand
Université de Toulouse; INPT,
UPS; Laboratoire de Génie Chimique,
118 Route de Narbonne F-31062,
Toulouse,
France

N. Lebleu
P. Aimar
C. Causserand
CNRS; Laboratoire de Génie Chimique,
F-31062, Toulouse,
France
E-mail: *lebleu@chimie.ups-tlse.fr*;
caussera@chimie.ups-tlse.fr;
aimar@chimie.ups-tlse.fr

C. Roques
Equipe Adhésion Bactérienne et Formation de Biofilms,
Université Paul Sabatier,
31062, Toulouse cedex 09,
France
E-mail: *christine.roques@cict.fr*

INTRODUCTION

In the context of potable water production, microbiological water quality remains one of the major concerns to public health (and water treatment professionals). Elementary disinfection processes, such as chemical oxidation by chlorination or ozonation, are not always efficient and reliable at ensuring the total deactivation of all micro-organisms present in raw water (Mac Kenzie *et al.* 1994). Among alternative or complementary processes, membrane technologies, and in particular cross-flow filtration, may provide an effective barrier to pathogens (e.g. Madaeni *et al.* 1995; Lazarova *et al.* 1999). Moreover, the pathogen removal being almost independent from the microbiological load of the raw water, membrane processes are able to produce water of constant microbiological quality using limited amounts of sanitizing chemicals and hence a low level of disinfection by-products as long as membrane integrity is not compromised.

However, defects can be present in the membrane structure, resulting from membrane manufacturing process or ageing.

Due to the method of preparation (e.g. phase inversion), ultrafiltration membranes have a certain range of pore sizes, which can be roughly approximated e.g. by a log-normal distribution the parameters of which are classically determined by retention of tracers. However some studies demonstrate (Urase *et al.* 1994; Causserand *et al.* 2002) that retention measurements of polyethylene glycols or dextrans used as tracers do not allow the detection of a small number of abnormally large pores having a diameter 10 to 2000 times larger than the average pore. As a

consequence, Urase *et al.* (1994) using a modified pore theory and a log-normal distribution of pore sizes, predict a lower penetration of viruses (coliphage Qβ) than the value obtained experimentally using an ultrafiltration membrane. These authors suggest that the leakage of microorganisms through the membrane might be attributed to the presence of some defects, the diameter of which is in the range 0.025–0.1 μm by comparison to the mean diameter of the principal distribution (8.5 nm).

This lack of sensitivity can be firstly ascribed to the limited number of abnormally large pores by comparison to the normal ones: around $1/10^9$ according Urase *et al.* (1994). Secondly these results raise questions about the correlation between the retention of tracers such as synthetic polymers and that of microorganisms.

Several studies are dedicated to the research of non biological surrogates for microorganisms, i.e. particles which would exhibit the same behaviour in filtration as bacteria or viruses. The published results are inconsistent with each other. Gitis *et al.* (2006*a*,*b*) compare the retention of MS2 bacteriophages (25 nm) and gold nanoparticles (12 ± 3 nm) by ultrafiltration membranes with molecular weight cut-offs ranging from 0.5 to 100 kDa. They obtain a good correlation between the retention of gold probes (non biological surrogate) and MS2 viruses (biological surrogate) on virgin membranes (Gitis *et al.* (2006*b*) and on aged membranes (treated by oxidative cleaning) (Gitis *et al.* 2006*a*). On the other hand, Madaeni (2001) shows that non-biological and biological colloids may behave in an opposing manner. This author compares the retention during microfiltration of single suspensions and mixed feeds. The filtration of a mixture of large latex particles (1 μm: model for bacteria) and gold colloids (50 nm: model for viruses) reduces significantly the retention of the smaller particles. On the other hand, during the filtration of a suspension containing a mixture of *Escherichia coli* (2 × 1 μm) and poliovirus (30 nm), the retention of the viruses is enhanced by the presence of the bacteria. According to the author, this is because biological colloids have adsorptive surfaces and produce extra cellular polymers allowing interactions between microorganisms that do not occur in the case of non-biological colloids. He concludes that non-biological colloids are not very representative of biological colloids or microorganisms.

Several other methods for monitoring the integrity of low-pressure membranes are available among which are air-based integrity tests. However, these tests are limited to the detection of defects around 3 μm in diameter (Farahbakhsh 2003; Adams & Côté 2005). Moreover, Adams & Côté (2005) proposed a method allowing the conversion of air-based test results to a log removal value. Their results show that, depending on the tested membrane, the log removal value obtained during the filtration of *Bacillus subtilis* is either superior or similar to that estimated using the integrity test data.

Considering the size of bacteria: *Escherichia coli* 1–2 μm for example, or the size of viruses: *Poliovirus* 0.028 μm, the abnormally large pores that are supposed to be responsible for the leakage of such microorganisms are *a priori* smaller than 3 μm in diameter. Therefore, air-based integrity tests are not sufficiently sensitive to detect them.

In this context, the present work proposes a method allowing the calibration of microfiltration or ultrafiltration membranes against a series of track-etched membranes used as a pore size ladder, using microorganisms as probes. The removal efficiency is linked to the detection of a small number of defects or abnormally large pores in the membrane structure. The range of pore diameters concerned by the method lies between 0.05 and 1.2 μm.

This method is based on the specific bacterial behaviour during filtration described in former studies (Delebecque *et al.* 2006; Lebleu *et al.* 2009). Some reports indicate that bacteria are deformable under mechanical stress and that osmotic pressure treatment leads to a reduction in their internal volume (Mille *et al.* 2002; Suchecka *et al.* 2005). We have shown that similar modifications occur during filtration due to the transmembrane pressure applied on the filtration cell. This deformation may lead to bacterial leakage through the membrane structure, the magnitude of which is not directly related to the ratio of the size of the bacteria at rest compared to the pore size. This phenomenon is governed by the structural characteristics of the microorganism wall, namely the peptidoglycan layer. As a consequence, this work proposes a classification for a series of bacteria according to their behaviour during filtration and not according to their dimensions at rest.

The identification of a transfer or an absence of passage of microorganisms during filtration through calibrated

(track-etched) membranes of various nominal pore diameters allows to calibrate the method. The tested membrane is challenged with the selected bacteria, taken one by one. The detection (or not) of bacteria in the permeate is an indication of the presence (or not) of pore of a given size in significant number.

This method can be used to compare any commercial membrane (or one in the course of development) to a reference. In addition, the notation used in the results of these tests will specify the dose of microorganisms used in the challenging suspension. Setting this parameter, which may otherwise affect the results, ensures that results obtained in different tests can be compared.

MATERIALS AND METHODS

Experimental set-up and procedure

Experiments were performed with a 50 mL dead-end filtration stirred cell (Model 8050, Amicon) connected to a 5 L reservoir (Figure 1). The trans-membrane pressure was set by air pressurisation of the reservoir. The pressure on the filtrate side was approximately atmospheric under all conditions. Filtration flux was measured by timed collection using a balance with an accuracy of ± 0.01 g. All experiments were performed at room temperature (20 ± 2°C).

Experiments were conducted in sterile conditions. The membrane was soaked prior to the experiment in a dilute solution of sodium hypochlorite at 25 ppm for 20 minutes and then rinsed thoroughly with sterile water. For the same reason, the filtration cell was soaked in a more concentrated solution of sodium hypochlorite (300 ppm) for 30 minutes. All the other equipment was sterilised (15 min 121°C) and kept under a laminar air flow hood. After each run, the membrane was replaced by a new one in order to avoid cross contamination between runs.

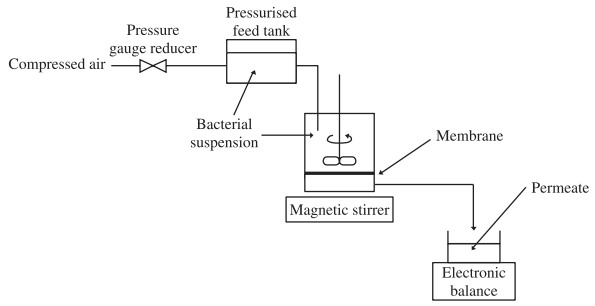

Figure 1 | Experimental setup.

After membrane compaction and permeability measurement, the feed tank and the cell were filled with the bacterial suspension to carry out the filtration run. The stirring rate was set at 300 rpm for all trials. A range of transmembrane pressures between 0.2 and 2 bars was investigated and we observed that the transmission of *E. coli* was maximum at 0.5 bars. For this reason, the transmembrane pressure for all experiments reported in this paper was 0.5 bar. Filtration flux was measured and 1 mL permeate samples were collected after 10, 20 and 30 minutes. Samples were sown in inclusion on the medium tryptone soy agar maintained in surfusion. Colony forming units (CFU) were counted after overnight incubation of the plates at 37°C. In addition, to increase the sensitivity of bacterial detection in case of low concentration, the total volume (minus the samples) of permeate collected over 30 minutes of filtration was filtered through totally retentive nitrocellulose filters (47 mm in diameter, Millipore). The filter was then placed on a tryptone soy agar plate and incubated at 37°C for 24 h. Enumeration of colony forming units on the filter was then performed.

Membranes

Challenge tests were performed on flat-sheet polycarbonate track-etched membranes (Millipore) of different nominal pore sizes (0.05 – 0.2 – 0.4 – 0.8 – 1.2 μm). This type of membrane was chosen as a model due to its well defined pore geometry and very narrow pore size distribution.

Bacterial suspensions

Five bacterial strains were selected: *Escherichia coli, Pseudomonas aeruginosa, Staphylococcus aureus, Brevundimonas diminuta and Micrococcus luteus*. These strains were chosen for their morphological and structural characteristics (Table 1). Stock cultures of each bacterial strain were maintained on tryptone soy agar slants (Biomérieux, Crapone, France) at 4°C. For preparation of inocula, bacteria were grown aerobically on tryptone soy agar plates at 37°C for 2 consecutive days. Colonies of the second 24 h

Table 1 | Characteristics of the bacterial strains and results of the bacterial challenge tests performed on track-etched membranes of various nominal pore sizes. Legend: √ and ∅ indicate respectively bacterial leakage and full rejection

	Bacterial strain	*B. diminuta*	*P. aeruginosa*	*E. coli*	*S. aureus*	*M. luteus*
	Reference	CIP 103020	CIP 103467	CIP 54127	CIP 53154	CIP 5345
	Shape	Rod	Rod	Rod	Sphere	Sphere
	Gram	Negative	Negative	Negative	Positive	Positive
	Size (μm)	0.8 × 0.4	1.6 × 0.8	2 × 1	0.8	1.2
Membrane nominal pore diameter (μm)	0.05	√	∅	∅		
	0.2	√	√	∅		
	0.4	√	√	√	∅	∅
	0.8				√	∅
	1.2				√	√

culture were suspended in physiological salt solution (NaCl 9 g L^{-1}) and the concentration of this stock suspension was adjusted to about 10^8 CFU mL^{-1} by optical density at 640 nm. The use of physiological salt solution for bacterial suspensions avoids osmotic shock and maintains bacterial size equilibrium. Suspensions were then diluted to 10^4 CFU mL^{-1} and this final suspension was used for filtration breakthrough assays.

RESULTS AND DISCUSSION

Calibration of the method

As an example, we report in Figure 2 the evolution of permeation flux $J_{p,iso}$ (L h^{-1} m^{-2}) and bacterial concentration in permeate $C_{p,iso}$ (CFU mL^{-1}) during the filtration of *P. aeruginosa* suspensions on an isopore membrane 0.4 μm at 0.5 bar. Both flux and bacterial leakage decrease over time, $C_{p,iso}$ reaching an almost constant value after 30 minutes. In spite of the very small amount of bacteria brought to the membrane surface (less than one layer of microorganisms, Lebleu *et al.* 2009), fouling mechanisms seem to be significant, leading to a decrease in bacterial transfer over time. As we are interested in the characteristics of the membrane itself, each filtration run was stopped after a duration of 30 minutes.

The results summarised in Table 1 are expressed in a simple way: presence or not of bacteria in the permeate after filtration of one of the microorganism listed in the *Materials and Methods* section.

According to the results of those experiments, each strain can be associated with a minimum nominal pore diameter through which bacterial leakage is observed. As a consequence, the order of the columns in Table 1 was chosen not according to the respective dimensions of each bacteria at rest, but according to the minimum pore diameter for which a leakage was detected (0.05 μm for *B. diminuta*/0.2 μm for *P. aeruginosa*/0.4 μm for *E. coli*/ 0.8 μm for *S. aureus*/1.2 μm for *M. luteus*). As shown in a previously published study (Lebleu *et al.* 2009), Gram-negative bacteria are flexible, and therefore their apparent dimension may depend on operating conditions. It would have been better to use only Gram-positive bacteria for the purpose of this characterization, but to the best knowledge of the authors, no Gram-positive bacteria were readily available in this range of dimensions.

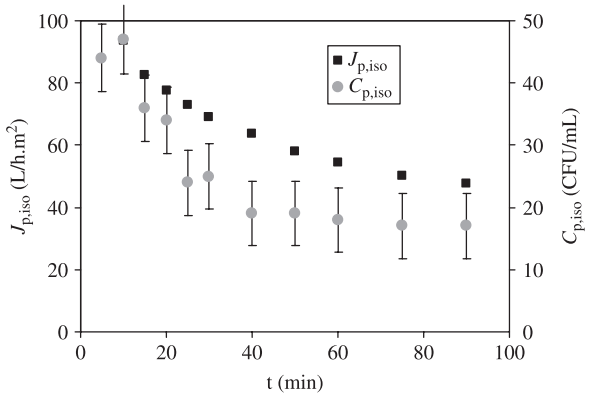

Figure 2 | Filtration of *P. aeruginosa* (10^4 CFU mL^{-1}) on isopore membrane 0.4 μm at a pressure 0.5 bar: evolution of permeation flux and concentration of bacteria in permeate versus time.

Method of membrane characterization

In order to reveal the presence of pores of a given diameter in any filtration membrane, the proposed method consists of successive filtrations of the five selected bacterial strains at low concentration (10^4 CFU mL^{-1}). Filtrations are performed in the same operating conditions as those used for the calibration step on isopore membranes. After each bacterial challenge, enumeration of colony forming units is conducted after incubation of permeate samples.

For example, if the tested membrane fully retains *E. coli*, we can consider, according to Table 1, that the defects of 0.4 μm are not numerous enough to alter the membrane's removal capacity within the limit of the detection method. Likewise, if another filtration shows that this tested membrane leaked *P. aeruginosa* to some extent, we can assume that the presence of abnormally large pores of at least 0.2 μm is significant.

In this case, we attribute to this membrane an effective diameter D, equal to the immediately superior value in Table 1 (0.4 μm). In order to indicate that these results have been obtained with a bacterial suspension at 10^4 CFU mL^{-1}, we affect the exponent 4 to the symbol D: $D^4 = 0.4$ μm.

We have shown in our previous study (Lebleu *et al.* 2009) that a decrease in feed concentration leads to a lower bacterial retention. Then, if a tested membrane has an effective diameter D^4 equal to or lower than 0.05 μm (case of a membrane exhibiting a complete retention during a bacterial challenge with a suspension of *B. diminuta* at 10^4 CFU mL^{-1}), the filtration of the series of microorganisms at a lower feed concentration could be tested. For example, if when filtering a suspension of *M. luteus* at 10^3 CFU mL^{-1}, no bacteria is detectable in the samples of permeate collected (within the limit of the detection method), then the effective diameter can be estimated to: $D^3 = 1.2$ μm.

To conclude, when a selected strain of bacteria is detected in the permeate during a filtration experiment, this indicates the presence of pores which behave as cylindrical pores of the diameter linked to the filtered microorganism according to Table 1. However, if no microorganism is detected in the permeate, this is not sufficient evidence to conclude that there are no defects of the diameter associated with the filtered bacteria, it only means that the number of such pores is less than the limit of detection of the method proposed above. This method requires each membrane to be challenged against several strains, and is therefore rather time consuming. On another hand it allows an objective comparison of membranes of various origins and structures against the same series of reference (track etched) membranes.

We propose in Figure 3 a summary diagram of the method.

Sensitivity of the method

The objective of this section is to evaluate the minimum number of pores of a given size per unit of membrane area that an ultrafiltration membrane must exhibit in order for these defects to be revealed by the proposed protocol.

The flux of bacteria transferred through the isopore membrane can be expressed as:

$$\frac{N_{\mathrm{p,iso}}}{\Delta t} = C_{\mathrm{p,iso}} \cdot J_{\mathrm{p,iso}} \cdot S \tag{1}$$

$N_{\mathrm{p,iso}}$ = Total number of bacteria transferred through the membrane over Δt [CFU],
$C_{\mathrm{p,iso}}$ = Bacteria concentration in the permeate of the isopore membrane [CFU L^{-1}],
$J_{\mathrm{p,iso}}$ = Permeate flux of the isopore membrane [L h^{-1} m^{-2}],
S = Effective area of the membrane in the filtration cell [m^2].

We then define τ the number of bacteria transferred through the isopore membrane per hour and per pore by assuming that all the pores can be represented by capillaries of the same radius r_{iso}:

$$\tau = \frac{N_{\mathrm{p,iso}}}{\Delta t} \cdot \frac{1}{n_{\mathrm{iso}} \cdot S} = \frac{N_{\mathrm{p,iso}}}{\Delta t} \cdot \frac{\pi \cdot r_{\mathrm{iso}}^2}{\varepsilon_{\mathrm{iso}} \cdot S} \tag{2}$$

n_{iso} = Number of pores per m^2 of isopore membrane area [pore m^{-2}],
$\varepsilon_{\mathrm{iso}}$ = Porosity of the isopore membrane.

Considering now a tested ultrafiltration membrane the principal pore size distribution of which totally retains the selected bacteria. In this case, observed leakage of bacteria

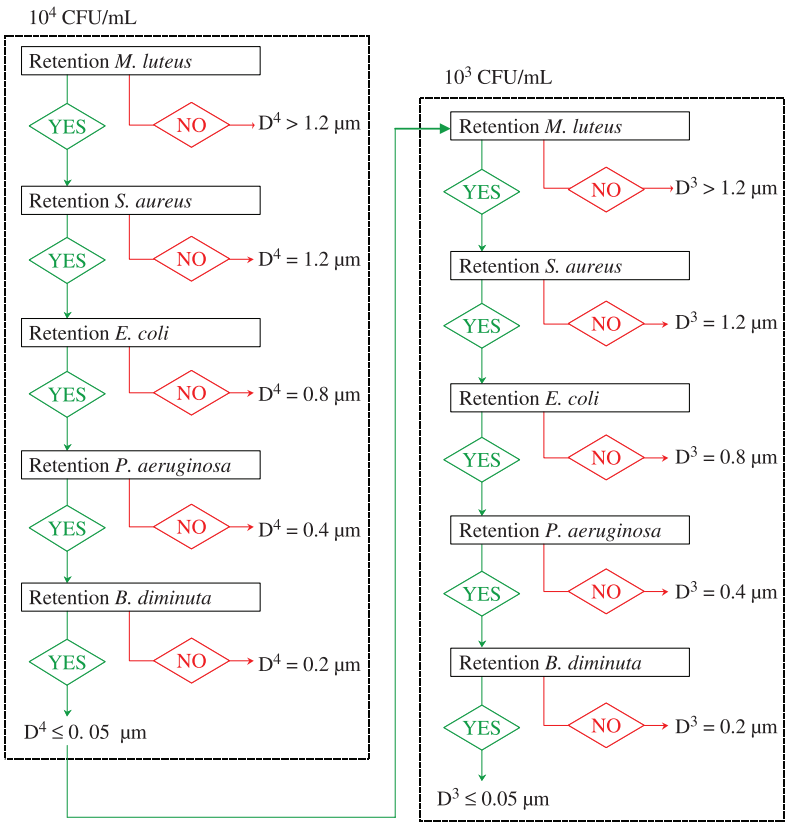

Figure 3 | Summary diagram of the method.

in permeate can only be attributed to the transfer of microorganisms through abnormally large pores. The bacteria concentration in the permeate can be deduced from Equation (1):

$$C_p = \frac{N_p}{J_p \cdot S \cdot \Delta t} \tag{3}$$

C_p = Concentration of bacteria in the permeate of the tested membrane [CFU L^{-1}],
N_p = Total number of bacteria transferred through the tested membrane over Δt [CFU],
J_p = Permeate flux of the tested membrane [$L\,h^{-1}\,m^{-2}$]

The concentration of the bacterial suspension being very low, we can assume that at the transmembrane pressure selected for the tests ($\Delta P = 0.5$ bar), the Darcy's law remains valid. The permeate flux during the filtration of the bacteria is then taken as the water flux in the same conditions of pressure and temperature. Equation (3) can be adapted:

$$C_p = \frac{N_p}{\Delta P \cdot L_p \cdot S \cdot \Delta t} \tag{4}$$

L_p = Hydraulic permeability of the tested membrane [$L\,h^{-1}\,m^{-2}\,bar^{-1}$].

By combination of Equations (2) and (4) we obtain:

$$C_p = \frac{\tau \cdot n_{def}}{\Delta P \cdot L_p} \tag{5}$$

In Equation (5), n_{def} is the number of pores large enough to allow a given bacteria to pass through per unit area [m^{-2}] and the value of τ is deduced from experimental results obtained with the isopore membrane by filtering the same bacterial suspension at the same pressure.

The effective area of the membrane in the filtration cell S is the same for isopore and tested membranes.

We can then derive the minimum number $n_{\mathrm{def,min}}$ of cylindrical pores which would behave as the membrane defects, that can be detected according to the minimum concentration of bacteria $C_{\mathrm{p,min}}$ detected by the analytical method. This last parameter is dependent on the volume of permeate collected and analysed. The maximum sensitivity will be obtained according the procedure presented in *Experimental set-up and procedure* section. It consists of collecting the total volume of permeate filtered V over Δt and filtering it through a totally retentive nitrocellulose filter. The filter is placed on a tryptone soy agar plate and incubated. Thanks to an enumeration of CFU on the filter, the limit of detection will be $C_{\mathrm{p,min}} = 1\,\mathrm{CFU}/V$.

As an example, if we consider experimental results obtained in the calibration step during the filtration at 0.5 bar of a suspension of *E. coli* $10^4\,\mathrm{CFU\,mL^{-1}}$ on an isopore membrane rated 0.4 μm: $J_{\mathrm{p,iso}} = 120\,\mathrm{L\,h^{-1}\,m^{-2}}$, $C_{\mathrm{p,iso}} = 100\,\mathrm{CFU\,mL^{-1}}$, $5\% < \varepsilon_{\mathrm{iso}} < 20\%$, $r_{\mathrm{iso}} = 0.2\,\mu\mathrm{m}$, $S = 13.4 \times 10^{-4}\,\mathrm{m^2}$, we obtain: $0.8 \times 10^{-5} < \tau < 3.0 \times 10^{-5}\,\mathrm{CFU\,h^{-1}\,pore^{-1}}$.

In a second step, a tested membrane with a permeability $L_{\mathrm{p}} = 300\,\mathrm{L\,h^{-1}\,m^{-2}\,bar^{-1}}$ is challenged over 30 minutes at 0.5 bar with a suspension of *E. coli* $10^4\,\mathrm{CFU\,mL^{-1}}$. The total volume filtered after 30 minutes being 100 mL, the minimum detectable bacteria concentration is $C_{\mathrm{p,min}} = 1$ CFU/100 mL. We then obtain: $n_{\mathrm{def,min}} \sim 10^8$ defects of 0.4 μm in diameter per $\mathrm{m^2}$ of membrane area.

Such calculations can be done for each bacteria/diameter reported in Table 1. The orders of magnitude are similar.

In conclusion, if we consider that an ultrafiltration membrane exhibits around $10^{15}\,\mathrm{pores\,m^{-2}}$, the proposed method is sufficiently sensitive to detect 1 abnormal pore (less than 1.2 micron in diameter) out of 10^7 regular ones, while determining in the same time its radius to an accuracy of ± 0.1 μm.

CONCLUSION

We propose a method for revealing the presence of abnormally large pores in ultrafiltration membranes using microorganisms as probes and a series of isopore membranes as a calibration ladder. The method is based on successive filtrations of bacterial suspensions which allow us to identify the presence of pores of a given size in the structure of the tested membrane and to evaluate their size range. The limit of detection of pores in the range 0.05–1.2 μm has been evaluated to approximately $10^8\,\mathrm{m^{-2}}$. In these conditions, this method is a complementary tool to the tests of membrane integrity already used by membrane manufacturers, which are currently not capable of detecting any pore smaller than 3 μm (air-based integrity tests).

REFERENCES

Adams, N. & Côté, P. 2005 An evaluation of membrane integrity monitoring methods for micro–and ultrafiltration systems, *10th Aachen Membrane Colloquium Proceeding*, Aachen, Germany.

Causserand, C., Aimar, P., Vilani, C. & Zambelli, T. 2002 Study of the effects of defects in ultrafiltration membranes on the water flux and the molecular weight cut-off. *Desalination* **149**, 485–491.

Delebecque, N., Causserand, C., Roques, C. & Aimar, P. 2006 Membrane processes for water disinfection: investigation on bacterial transfer mechanisms. *Desalination* **199**, 81–83.

Farahbakhsh, K. 2003 Monitoring the integrity of low-pressure membranes. *J. Am. Water Works Assoc.* **95**(6), 95–107.

Gitis, V., Haught, R. C., Clark, R. M., Gun, J. & Lev, O. 2006*a* Application of nanoscale probes for the evaluation of the integrity of ultrafiltration membranes. *J. Membr. Sci.* **276**, 185–192.

Gitis, V., Haught, R. C., Clark, R. M., Gun, J. & Lev, O. 2006*b* Nanoscale probes for the evaluation of the integrity of ultrafiltration membranes. *J. Membr. Sci.* **276**, 199–207.

Lazarova, V., Savoye, P., Janex, M. L., Blatchley, E. R. & Pommepuy, M. 1999 Advanced wastewater disinfection technologies: state of the art and perspectives. *Water Sci. Technol.* **40**(4/5), 203–213.

Lebleu, N., Causserand, C., Roques, C. & Aimar, P. 2009 Role of the cell-wall structure in the retention of bacteria by ultrafiltration membranes. *J. Membr. Sci.* **326**, 178–185.

Mac Kenzie, W. R., Hoxie, N. J., Proctor, M. E., Gradus, M. S., Blair, K. A., Peterson, D. E., Kazmierczak, J. J., Addiss, D. G., Fox, K. R., Rose, J. B. & Davis, J. P. 1994 A massive outbreak in Milwaukee of *Cryptosporidium* infection transmetted through the public water supply. *N. Engl. J. Med.* **331**(3), 161–167.

Madaeni, S. S. 2001 Non biological colloids as a model for biological colloids in membrane filtration. *Filtration Sep.* **38**, 49–53.

Madaeni, S. S., Fane, A. G. & Grohmann, G. S. 1995 Virus removal from water and wastewater using membranes. *J. Membr. Sci.* **102**, 65–75.

Mille, Y., Beney, L. & Gervais, P. 2002 Viability of *Escherichia coli* after combined osmotic and thermal treatment: a plasma membrane implication. *Biochim. Biophys. Acta* **1567**, 41–48.

Suchecka, T., Piatkiewicz, W. & Sosnowski, T. R. 2005 Is the cell retention by MF membrane absolutely safe–a hypothetical model for cell deformation in membrane pore. *J. Membr. Sci.* **250**, 135–140.

Urase, T., Yamamoto, K. & Ohgaki, S. 1994 Effect of pore size distribution of ultrafiltration membranes on virus rejection in crossflow conditions. *Water Sci. Technol.* **30**(9), 199–208.