HAL
open science

User-centered visual analysis using a hybrid reasoning architecture for intensive care units

Bernard Kamsu-Foguem, Germaine Tchuenté Foguem, Laurent Allart, Youcef Zennir, Christian Vilhelm, Hossein Mehdaoui, Djamel Zitouni, Hervé Hubert, Mohamed Lemdani, Pierre Ravaux

To cite this version:

Bernard Kamsu-Foguem, Germaine Tchuenté Foguem, Laurent Allart, Youcef Zennir, Christian Vilhelm, et al.. User-centered visual analysis using a hybrid reasoning architecture for intensive care units. Decision Support Systems, 2012, 54 (1), pp.496-509. 10.1016/j.dss.2012.06.009 . hal-03531007

HAL Id: hal-03531007

https://hal.science/hal-03531007v1

Submitted on 18 Jan 2022

HAL is a multi-disciplinary open access archive for the deposit and dissemination of scientific research documents, whether they are published or not. The documents may come from teaching and research institutions in France or abroad, or from public or private research centers.

L'archive ouverte pluridisciplinaire **HAL**, est destinée au dépôt et à la diffusion de documents scientifiques de niveau recherche, publiés ou non, émanant des établissements d'enseignement et de recherche français ou étrangers, des laboratoires publics ou privés.

Open Archive TOULOUSE Archive Ouverte (OATAO)
OATAO is an open access repository that collects the work of Toulouse researchers and makes it freely available over the web where possible.

This is an author-deposited version published in : http://oatao.univ-toulouse.fr/
Eprints ID : 6862

To link to this document : DOI:10.1016/j.dss.2012.06.009
URL : http://dx.doi.org/10.1016/j.dss.2012.06.009

To cite this version : Kamsu Foguem, Bernard and Tchuenté Foguem, Germaine and Allart, Laurent and Zennir, Youcef and Vilhelm, Christian and Mehdaoui, Hossein and Zitouni, Djamel and Hubert, Hervé and Lemdani, Mohamed and Ravaux, Pierre *User-centered visual analysis using a hybrid reasoning architecture for intensive care units.* (2012) Decision Support Systems, vol. 54 (n° 1). pp. 496-509. ISSN 0167-9236

Any correspondance concerning this service should be sent to the repository administrator: staff-oatao@inp-toulouse.fr.

User-centered visual analysis using a hybrid reasoning architecture for intensive care units

Bernard Kamsu-Foguem [a,*], Germaine Tchuenté-Foguem [b], Laurent Allart [c], Youcef Zennir [b], Christian Vilhelm [b], Hossein Mehdaoui [c], Djamel Zitouni [d], Hervé Hubert [d], Mohamed Lemdani [b], Pierre Ravaux [b]

[a] Laboratory of Production Engineering, EA 1905, ENIT, INPT, University of Toulouse, 47 avenue d'Azereix, BP 1629, 65016 Tarbes Cedex, France
[b] Department of Biomathematics, EA 3614, Faculty of Pharmacy and Biology, University of Lille - North of France, 3 rue du Professeur Laguesse, BP 83, 59006 Lille Cedex, France
[c] Department of Intensive Care, Fort de France University Hospital, BP 632, 97261 Fort-de-France, France
[d] Department of Public Health, EA 2694, UDSL, Lille Institute of Management and Health Sciences (ILIS), University Lille - North of France, Loos, France

* Corresponding author.
E-mail address: bernard.kamsu-foguem@enit.fr (B. Kamsu-Foguem).

A B S T R A C T

One problem pertaining to Intensive Care Unit information systems is that, in some cases, a very dense display of data can result. To ensure the overview and readability of the increasing volumes of data, some special features are required (e.g., data prioritization, clustering, and selection mechanisms) with the application of analytical methods (e.g., temporal data abstraction, principal component analysis, and detection of events). This paper addresses the problem of improving the integration of the visual and analytical methods applied to medical monitoring systems. We present a knowledge- and machine learning-based approach to support the knowledge discovery process with appropriate analytical and visual methods. Its potential benefit to the development of user interfaces for intelligent monitors that can assist with the detection and explanation of new, potentially threatening medical events. The proposed hybrid reasoning architecture provides an interactive graphical user interface to adjust the parameters of the analytical methods based on the users' task at hand. The action sequences performed on the graphical user interface by the user are consolidated in a dynamic knowledge base with specific hybrid reasoning that integrates symbolic and connectionist approaches. These sequences of expert knowledge acquisition can be very efficient for making easier knowledge emergence during a similar experience and positively impact the monitoring of critical situations. The provided graphical user interface incorporating a user-centered visual analysis is exploited to facilitate the natural and effective representation of clinical information for patient care.

Keywords:
Intelligent user interface
Visual computing
Connectionist-symbolic integration
Knowledge acquisition
Intensive care units
Medical monitoring

1. Introduction

The dynamic environment sets special requirements for context-aware hospital applications to provide users with appropriate services and to offer a suitable interface to users [9]. The medical domain is particularly interesting for the application of techniques for visualizing time-oriented data that is essential for analysis activities in many application scenarios. A better integration of visual, analytical, and user-centered methods is key to adapting visual and analytical methods to the user's task at hand. The goal of model visualization is to allow the user to form clear mental images of a model's structure and function [56]. The hybrid connectionist-symbolic approach to drive user-centered visual analysis seems to be promising for the field. It eases the implementation of a task-orientation specification to suggest and parameterize the visual, analytical, and interaction methods. The user interface of the proposed hybrid reasoning architecture gives a physician a discrete overview of a patient's status (through clinical phases or “scenes”) and detects clinically meaningful abnormalities. In fact, the progression of different degrees of parameter abnormalities is represented by a sequence of clinical phases, which reflects the involved predominant physiologic process (e.g., increased blood gas pressures, vasodilatation, and hypotension). To do so, conceptualizing/representing the knowledge of some underlying reasoning that paves the way for specialized problem-solving expertise is important [5]. A formal conceptualization of the implicit knowledge emerging during concrete actions can be exploited to not only have accurate and effective knowledge bases but also dynamically adapt to changes [53]. In the user interface management, a knowledge capitalization process can offer the user a way to reuse the cumulative experiences in browsing through patient records [27], which requires expert interface to capture domain knowledge in the form of a physiological/process model.

In Intensive Care Units (ICUs), there exists a crucial need for intelligent monitoring systems that can help the physician to deal with the massive information flux. ICUs present intrinsic characteristics that

make the reasoning and decision-making problem totally different from other clinical areas [59]. To improve medical care management, more innovative tools are required [21]. These tools will help physicians to interpret clinical parameters more quickly and to choose the appropriate treatment for the patient among many different options [30]. In such circumstances, User Interface Engineering can be a valuable tool in the medical domain because it is a think tank that explores user experience, design, and the usability of technology [54]. Unlike the traditional design in which the goal is to make the object or application physically attractive, the goal of user interface design is to make the users' interaction experience as simple and intuitive as possible [63]. A review of intelligent human-machine interfaces in light of the ARCH model [40] has shown that the development of interface architectures based on artificial intelligence techniques (using the knowledge of the user's cognition) can be incorporated into a user interface to ease the task of the human user.

The need for intelligent patient monitoring systems is continuously reinforced by the necessity to automatically build a concise view of the patient's evolution to work "in understanding" with the user. Some studies try to capture automatically the way the user interacts with the system [41,71]. Yen and Acay demonstrated that through monitoring the user's actions, the system can determine the user's intentions and transform the deduced intentions into system actions [41]. Understanding the user's implicit actions allows the effectiveness of the user interface enhancements to be assessed with a reduction in the number of operations performed by the user to achieve a specific goal while using the GUI. Kumar and Sekmen showed how Intelligent User Interfaces (IUIs) improve the communication between humans and machines when the interface technology makes the leap from a passive tool-set to a proactive assistant [71]. In fact, the studied User Interfaces use machine learning to improve their interactions with humans (information filtering, data value production and command generation). For example, by inducing suggested data values based on previously observed values, the system reduces the data entry time for a human operator and improves the human's performance at a task with the quality of the data.

Studying interactive techniques for the visual analysis of time-oriented data is essential for building targeted user interfaces. The information gained by these techniques can support the analysis and visualization process to provide additional guidance to users. For example, during their respective reasoning (e.g., to detect events of temporal data abstractions [11,64], practitioners would filter, map, and render information from data objects with the aim of taking advantage of the visual analysis methods capabilities to do the following [36]: i) diagnose the pathology of the patient according to the symptoms expressed by the patient, the observations or analysis of the doctor and the already known health problems of this pattern; and ii) determine the best possible therapeutic procedures. This method fits with knowledge-assisted visualization that provides some opportunities to update and share knowledge through visualization [70]. Studying tighter combinations of analysis steps and event-based visualization could at least result in new, powerful means for the visual analysis of time-oriented data. The user interface must provide different specification methods to allow the system to give relevant visual information based on the physician's experience and interaction (e.g., expert, common and less-experienced visualization users).

The rest of this paper is organized as follows. We discuss in Section 2 the state of the art, including the user interface issue in the medical domain and information visualization with user-centered visual analysis. Then, in Section 3, we highlight the importance of the Connectionist-Symbolic Integration used for generating contextualized visual representations in the user interfaces. A description of its reasoning mechanisms, useful for extracting and automatically highlighting the relevant information from time-oriented data, is also presented in the *Aiddiag*'s software architecture. In Section 4, the impact of such architecture is illustrated for the intelligent or knowledge-based visualization of medical data. In Section 5, we provide some information about the effective use of the system in the intensive care unit at a University Hospital. We outline in Section 6 the lessons learned on the implementation of our approach and note our findings and future works in the interactive information visualization.

2. State of the art

2.1. Related works: user interfaces within intensive care units

In the last few years, the user interface has proved to be a valuable tool in the medical sector for assisting medical doctors and various physicians (e.g., anesthetists [44] and neonatologists [49]) in many applications (e.g., oncological, cardiovascular [7], and respiratory aspects [22]). In the Intensive Care Unit (ICU) domain in particular, the applications range from software to supervise patients through quality scenario controllers to integrated strategic decisions.

Boaz and Shahar developed IDAN/KNAVE-II [7], a conceptual and practical architecture that fully implements the temporal-abstraction mediation approach. The KNAVE architecture comprises three types of modules: the temporal-abstraction module, knowledge-acquisition tools, and the information visualization module. The KNAVE-II intelligent (knowledge based) interactive interface is used to monitor and explore time-oriented clinical data and their abstractions. An early description of the KNAVE-II interactive visualization module and conceptual interface was made by Shahar and Cheng [60,61], and the interface itself and its semantics was described in detail later [62] and evaluated for its functionality, completeness, correctness, and usability [45]. The IDAN/KNAVE-II combined architecture supports multiple applications, such as in a project focused on the assessment of the quality of guideline-based care (mainly in the domains of oncology and antihypertensive therapy). Some knowledge-acquisition enhancements are needed, both for the display of the definition of existing periodic and linear patterns and for the specification of new patterns.

The systems described here illustrate that choosing between specificity and generality is not easy. Many systems are typically developed for a very narrow, specific application that lends itself to rule-based approaches (e.g., VIE-VENT [49] or SENTINEL [44]) or connectionist and statistical approaches (e.g., RESPAID [12]). However, the lessons learned and their success is limited to their domain of expertise. Meanwhile, generic architectures endeavor to support several application domains and strive for flexibility, modularity, and ease of expansion (e.g. SIMON [20], *Aiddiag* [12] and IDAN/KNAVE-II [7]). This generality is often at the expense of expertise and performance in specific domains [25]. In this study, we have adopted the second approach with a focus on connectionist-symbolic integration, which combines machine learning and structured background knowledge representation.

We follow this later approach and adopt a general framework of knowledge representation and reasoning (namely the *Think*!-based *Aiddiag* framework [12,69]), and we aim to build an IUI considering traces of computer use as experience knowledge containers to support a comprehensive visual analysis. Furthermore, this general framework allows, using heterogeneous computing techniques, sharing and exchanging information between two or more medical computer systems (but designed and implemented independently). Within the ISIS (Intelligent Survey for Information Systems) program [48], we make some extensions in the *Aiddiag* framework by developing new modules for medical research at the bedside in critical care units. The position exposed in this paper is clearly a user-centered approach [6] in which the system can offer visualization assistance based on its knowledge of the user's aims. The main conclusive idea that we can draw from this part is that most of the user interfaces used in the healthcare domain are traditional (contrary to these

approaches, our objective is to propose something new: an intelligent approach).

2.2. Integration of visual, analytical, and user-centered methods

The explicit representation of reasoning methods is an essential feature for building a flexible system that offers various methods to support visual analysis and decision making. Interactive exploration and browsing information are means for a successful visual analysis. Displaying the relevant information on the screen according to this context is useful as a medicine schema or patient record, for example, to enable the physician to access medical records and x-ray images using IUIs while performing the diagnosis. More generally, the temporal context is essential to decide which properties are initiated or terminated by the occurrence of an event [34]. Furthermore, the physicians could check if their action or decision is carrying the right medicine for the right patient. A typical example is the following: in the case of a patient with a respiratory health problem (e.g., respiratory insufficiency or pulmonary edema), certain diagnoses should not be overlooked before the patient can receive artificial ventilation [67].

In general, information visualization is a strategic component to achieve several goals (intuitive data formats, emphasizing subtle aspects of reasoning and information overload prevention). Chittaro's classification of such goals [14] may also be used to describe the systems in the table along with some other criteria (e.g., expert knowledge adaptation [51], completely static vs. dynamic, complexity, hospital-tested). We note some works in IUIs in medicine that were applied to patient populations, such as the IPBC (Interactive Parallel Bar Charts) system [16]. The main feature of IPBC is a visual data mining (VDM) system devoted to the interactively analysis of collections of time-series, and its application to the real clinical context of hemodialysis was shown. There are recent works regarding the intelligent (knowledge-based) visualization of clinical data and the interpretation of those data of patient groups, such as those described by Klimov et al. [37–39].

In fact, a typical survey of intelligent information visualization methods was performed by Aigner et al. [2], and they performed another work involving visual analytical methods [3]. They have elaborated on a categorization schema (based on time, data, and representation criteria, such as 2D vs. 3D and static vs. dynamic) that is intended to help clarify a variety of concepts and methods for analyzing time-oriented data [2]. The concepts of temporal data abstraction, principal component analysis, and clustering are detailed to illustrate the usefulness of a tighter integration of visual and analytical methods:

- *Temporal data abstraction* reduces value ranges from quantitative values to qualitative values, which are much easier to understand.
- *Principal component analysis* reduces the number of variables by switching the focus to major trends in the data.
- *Clustering methods* reduce the number of data tuples by finding expressive representatives for groups of tuples.

To emphasize relevant information according to the users' needs, they proposed a task-driven approach called *event-based visualization* [3]. Combining event-based methodology with visualization approaches eases the integration of the user into the visual analysis process. The operational model of event-based visualization consists of three major steps (Fig. 1): event specification (i.e., describing user interests), event detection (i.e., finding relevant data portions), and event representation (i.e., considering user interests in visual representations). The description of user interests as formal event types can be specified with event formulas directly, by parameterizing event type templates, or by selecting from a predefined application-specific collection of event types. The basic idea is to find events in the data and then trigger automatic parameter adjustments aimed at generating better targeted visual representations of the clinical information. Additionally, there are other research studies on the knowledge-based, or ontology-based, visualization of clinical data, such as the classic theoretical and practical work by Cousins and Kahn [18] and Chittaro et al. [15,16].

The logic of use can be attached to the visualization process to give future users a simple and adapted means to their work objectives within a mixed perspective synthesizing theoretical and empirical knowledge on clinical reasoning [13]. For example, the change in the level of artificial ventilation control makes translating the intention of a physician to modify the volume of oxygen taken in by the body possible. This scenario refers to a sequence of user operations: to place the cursor on the level, to erase the old level, to keyboard the new level, then to validate or position the cursor on the level, to select another level in a list, and then to validate. To perform this scenario, key domain concepts are useful for knowledge clarification, and they allow one to get lessons with learned descriptions that are significant [35]. These lessons would enable the practitioner to interact in a natural manner with adequate assistance in the monitoring tasks.

3. A connectionist-symbolic approach to support knowledge-assisted visualization

Because no single knowledge formalism can model all the possible patterns in the medical knowledge, we suggest that a combination of formalisms and pattern-specific reasoning methods could achieve better results [28]. There are both technical and philosophical reasons for this suggestion. First, each separate knowledge formalism offers a different set of expressive capabilities appropriate for specifying a different set of properties clearly and concisely [50]. Furthermore, the complexity of the medical domain requires the use of multiple applications of artificial intelligence technologies (e.g., medical planning, diagnosis and treatment) and implementing several knowledge representation schemes (e.g., rule-based reasoning, artificial neural networks) that do not overlap [52]. Therefore, the proposed methodology

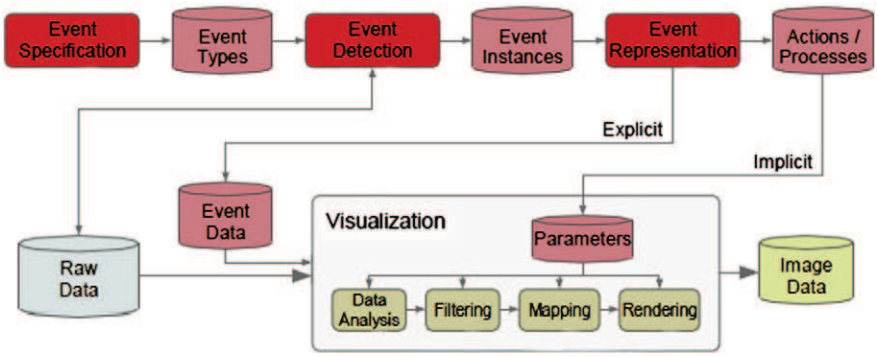

Fig. 1. The model of event-based visualization [3].

is based on the use of a neuro-symbolic formalism called *Think*! [69], which takes inspiration from the cognitive and neural mechanisms but also allows symbolic interpretation or interaction with symbolic components. In the *Think*!-based *Aiddiag* framework, we have developed a visually driven analysis support system for medical knowledge management, aimed at helping the patient's healthcare team (doctors, physicians, biologists, etc.)

3.1. Connectionist-symbolic integration

Traditional symbolic Knowledge-based Systems (KBSs) are well-designed to handle expert knowledge represented by symbolic rules. Connectionist systems are powerful tools used to learn and generalize knowledge obtained from practical cases (including uncertain and imprecise data). NéoGanesh [22] and VIE-VENT [49] are examples of rule-based systems that determine the optimal treatments for patients based on clinical and experimental guidelines and protocols. In contrast, the works of Stacey and McGregor are concerned with the applications of results from machine learning processes to data streams to detect adverse clinical conditions [64]. Thus, combining these two approaches will explore their complementarities to improve overall system performance with integrated reasoning and learning capabilities. Neural-Symbolic Learning Systems contain six main phases [19]: (1) symbolic knowledge insertion, (2) inductive learning with examples, (3) massively parallel deduction, (4) theory fine-tuning, (5) symbolic knowledge extraction, and (6) feedback (see Fig. 2). The major hypothesis of our proposed approach is to use a hybrid connectionist system for building intelligent interfaces. This approach could help to suggest recommendations for the elaboration of adapted information visualization and analysis to ease further decision making. Hybrid connectionist systems are computational systems that are based mainly on artificial connectionist networks but also allow symbolic interpretation or interaction with symbolic components [65].

The motivation for examining hybrid connectionist models is to provide different processing mechanisms that can bridge the wide gap between, for example, data acquired from biomedical equipment and knowledge resulting from medical expertise. First, different cognitive processes are not homogeneous, and as expected, they are based on different representations. Therefore, there is evidence from cognitive science and neuroscience that multiple architectural representations are involved in human processing. Second, from the point of view of KBSs, hybrid symbolic and connectionist representations have some advantages. Even different, mutually complementary properties can be combined. Symbolic representations have the advantages of easy interpretation, explicit control, fast initial coding, dynamic variable binding and knowledge abstraction. Connectionist representations, however, show the advantages of gradual analog plausibility, learning, robust fault-tolerant processing, and generalization. Because these advantages are mutually complementary, a hybrid symbolic connectionist architecture can be useful if different processing strategies have to be supported [50].

The use of techniques from the field of Connectionist-Symbolic Integration and autonomous widgets provides a new complementary style of human-computer interaction, in which the computer becomes an intelligent, active and personalized collaborator. Autonomous interface widgets are computer programs that employ Artificial Intelligence methods to provide active assistance to a user of a particular computer application. The metaphor used is from a personal assistant collaborating with the user in the same work environment. The assistant becomes gradually more effective as it learns the user's interests, habits and preferences. To summarize, instead of the user adapting to an interface, an IUI can adapt to the user and its environment. The IUI tries to determine the needs of an individual user and attempts to maximize the efficiency of the communication. This approach is similar to an agent development toolkit according to specifications for interoperable agent-based systems [68].

3.2. Think! formalism: a connectionist-symbolic representation scheme

Building a complete diagnosis support tool would require the use of several techniques, including decision trees, first-order logic expert systems, and a trained neural network. All these techniques have their own preferred field of application, and they do not overlap. Requiring a user (developer, physician or biologist) to employ a single technique for a task may force undesirable restrictions on the expression, analysis or production of a solution.

Introduced by C. Vilhelm, the *Think*! formalism is a unified connectionist-symbolic representation scheme that tries to subsume several formalisms currently used in the ICU [69]. Vilhelm suggested that the addition of a pattern recognition capability using Connectionist-Symbolic Integration would allow the development of systems that would meet the stringent and complex requirements of the medical environment. The *Think*! formalism can be more easily updated than rule-based systems, and it is useful in discovering knowledge from physiological data and their correlation with clinical events [69]. Being able to integrate these knowledge representation schemes in a single model enables us to use existing knowledge bases and existing knowledge extraction techniques to make them communicate and work together. *Think*! is based on a connectionist structure but is sparsely connected to have explicit paths. We have introduced symbolic representation objects into this network, together with the concept of propagating truth values associated with these symbols. Adding weights (data as

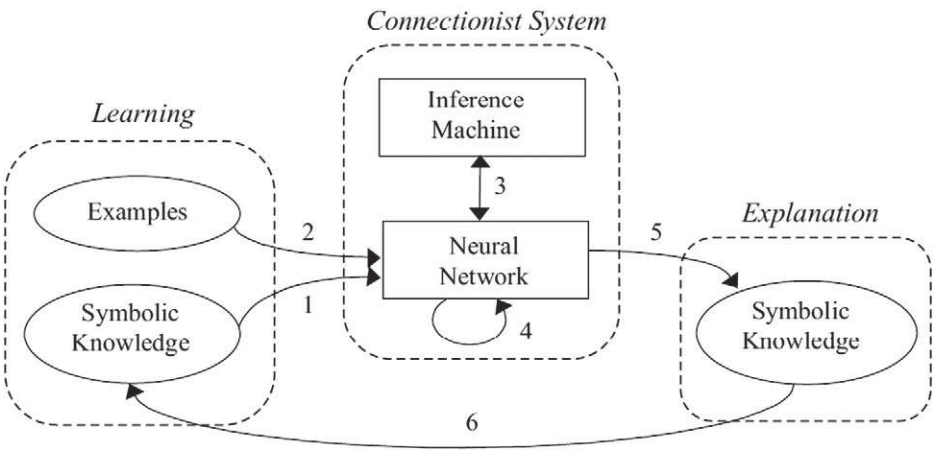

Fig. 2. Neural-symbolic learning systems [19].

weights to either side of a balance) helps to strengthen or to weaken the identified conclusions.

The *Think*! formalism is based on three structure elements: containers, processes, and tubes. Containers hold the information (excitations), processes make calculations, and tubes transport the information. The structure elements define a network representing the knowledge base. Reasoning is achieved by propagating excitations through the network from one element to another and making calculations based on these excitations. The information obtained with the calculations help fine-tune the network to better characterize the knowledge domain. The symbolic knowledge extracted is analyzed to enable the essential interaction between the network and the external environment. The role of each of these elements is described explicitly above (Fig. 3):

- *Containers* are named data holders. They have only one input receiving new values that change the internal state of the container and one or more outputs transmitting the container's state to other elements of the network. The containers are the elements by which an external system can communicate with the network. They are represented by rectangles.
- *Processes* are the active elements of the network. They perform calculations on their inputs and produce a result that is transmitted through one or more output tubes. They are represented by circles.
- *Tubes* are oriented links propagating the information from one element to the other elements of the network. Tubes have characteristics such as weight, which attenuates or amplifies the propagated information, and length, which conditions and respects a given delay of the propagations at a given speed.

The structure elements define a network representing the knowledge base. The information circulating in the network is called an excitation, which is the association of a numerical value with its truth value. Reasoning is achieved by propagating these excitations through the network from one element to another and by making calculations on these excitations. All numerical truth values are represented with fuzzy intervals.

In Fig. 3, the window "3D visualization of a *Think*! Network" consists of two parts:

- The *left frame* contains a display of a 3D movie of the *Think*! network for the interactive visualization of information processing. The 3D movie facilitates the task of the user by connecting the networks to his/her domain objects and attracts the user's attention on knowledge processing.
- In the *right frame*, the settings of the different manipulation options are shown. The action 'visualization' allows the parameters of the 3D objects to be seen; the action 'creation' allows a new *Think*!

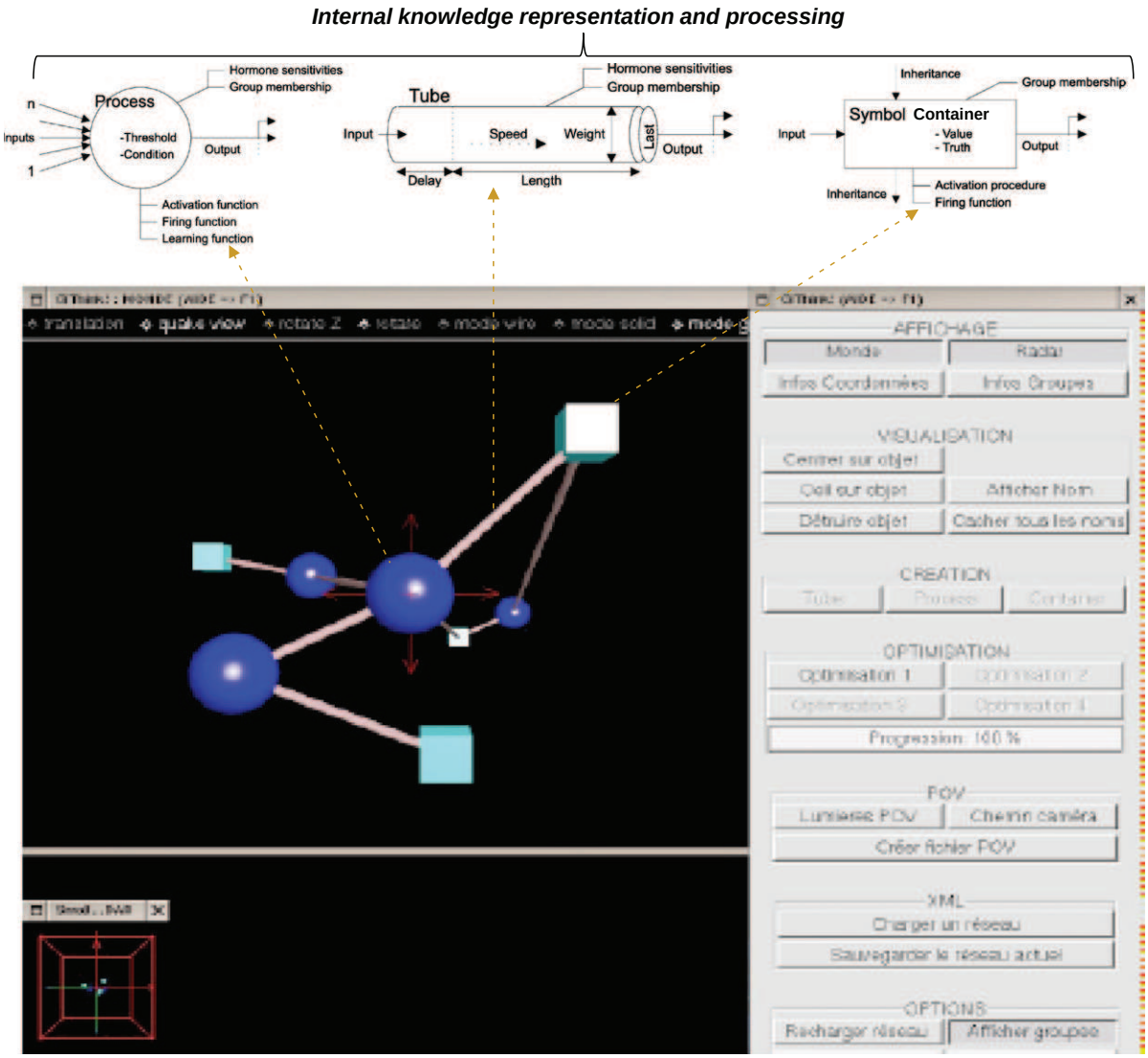

Fig. 3. The 3D visualization of a *Think*! network.

network to be built and the action 'optimization' allow the current progression of the information processing to be optimized. Driving the knowledge discovery with appropriate navigation operators is also possible by visualizing the sequential pattern analysis described by *Think*! networks.

When an excitation is in transit inside a tube, it is called a propagation. Each container and process has a function (called an activation function) that will be activated whenever a propagation reaches the element. An activation function computes the output excitation from the input excitations and can also create or modify any element of the network. The input process tubes are ordered, and input excitations are dated upon arrival. The movement of each propagation is ensured by a specific rate-regulator with a basic time unit called a tick. At each tick, all the propagations are moved, and if some reach a container or a process input, the corresponding activation function is executed, and the result is carried out. *Think*! is a polyvalent knowledge representation formalism that simultaneously enables the use of previously expressed knowledge in different formalisms by maximally preserving the capacities for explanation of the reasoning and by acquiring new knowledge in a semi-automatic way. In a nutshell, the knowledge is represented by a symbolic language, whereas the deduction and learning are performed by a connectionist engine. For a more detailed description about this formalism, the reader can refer to Vilhelm et al. [69].

3.3. Aiddiag: a modular software architecture

In the *Think*!-based *Aiddiag* framework, we have developed a Computer-Assisted decision support system for medical knowledge management to help the patient's healthcare team (doctors, physicians, biologists, etc.). As part of the *Aiddiag* project, to help the physician, we have to build a central low-cost workstation to be placed at the patient's bedside and that acts as a unique information display and interpretation system. The data produced by monitoring equipment is supposed to help the medical staff better diagnose and monitor the evolution of the patient's status. The potentially available data include heterogeneous sources, such as blood gas partial pressures, hemodynamic parameters, or ventilator settings. The *Aiddiag* system has been designed to accommodate different types of data: images, parameters originating from ambient sound, therapeutic event information and data that is retrieved from external databases and knowledge bases. We have proposed data-driven techniques to improve the exploitation of raw data coming from medical devices that are present at the patient's bedside. Clearly, a set of relevant indices has to be derived for the automatic recognition of complex clinical scenarios and the efficient detection of dangerous situations. To minimize the introduction of a priori knowledge, Calvelo et al. [10] describe a data-oriented methodology for the extraction of local trends from a set of raw physiological data and report its on-line application in the working *Aiddiag* platform. For example, acquiring and processing complex medical data (e.g., respiratory frequency (Fr), arterial hemoglobin oxygen saturation [SaO_2]) and signals (e.g., the detection of mechanical abnormalities, disconnection, overpressure, very low levels of CO_2), from biomedical devices is possible. These data are checked, filtered, and described in the working format before being transmitted to the database. The adaptation of the GARCH method [24] improves the quality of the symbolic time series transformation to construct a typical parameter evolution or scenario. GARCH models have been extensively investigated in the econometric domain and are employed commonly to analyze the unpredictable movements of a time series. These models provide an essential means for reliably capturing time-varying volatility (i.e., periods of swings followed by periods of relative calm) and effectively managing risk.

Aiddiag is based on a totally modular architecture to allow a certain level of flexibility in varying circumstances, making the encapsulation of knowledge and expansion of the KBS by incremental development easy. The *Aiddiag* architecture was re-designed to provide a significantly more reliable infrastructure [4] (Fig. 4). The application is built as an assembly of storage and module layers, implementing a simple function including data acquisition, data display, and alert evaluation. There are four types of modules: the kernel controls *Aiddiag*'s behavior, drivers acquire the data from biomedical equipment, computing modules compute the data and display modules show the data. Each module comes with its data as a separate shared memory segment (storage layer) that is available to the other modules. The storage layer answers queries from other modules and triggers alerts and alarms based on the data present in the shared memory when pre-set thresholds are exceeded. The *AdgVariables* are programming variables that are used to store data and inform the modules of updates. All modules are loadable or unloadable dynamically without interrupting the application. The modules can communicate through a messaging system, and when

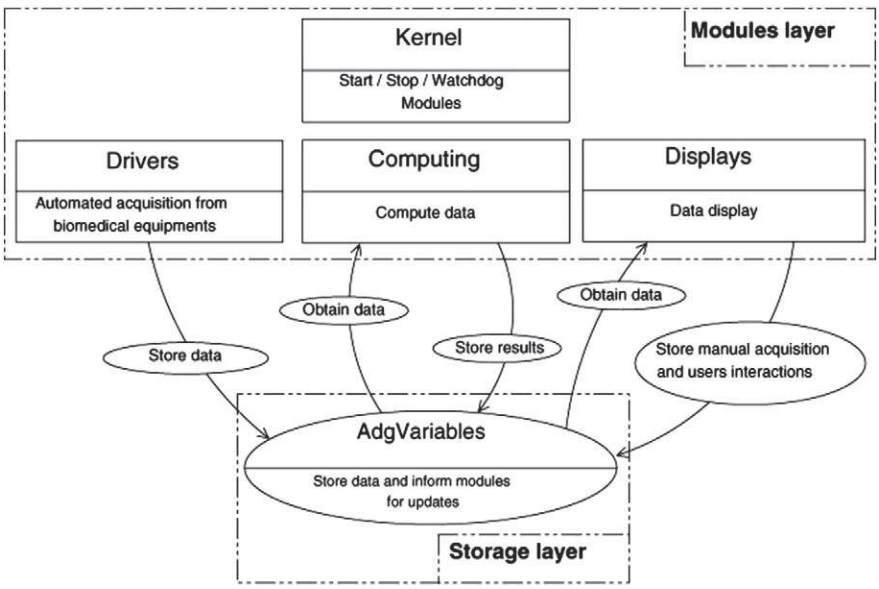

Fig. 4. Architecture of the *Aiddiag*'s software [4].

a module fails, its data remains available for the others. There are two types of modules, which differ in the way their information is displayed:

- Modules without a graphic interface, such as the driver module that is in charge of clinical data acquisition from biomedical equipment (e.g., the measure of the respiratory exchange ratio (VCO_2/VO_2). The driver module connects to the equipment with the available communication medium (e.g., serial line, analog line, switched or wireless network). If a module crash is detected, the faulty module is restarted automatically by the kernel that controls *Aiddiag's* behavior, which is itself redundant and fault-tolerant. The computation module is a neuro-symbolic engine for medical knowledge representation and reasoning. With the processing of representative parameters, for example, it defines the current state of the patient and the evolution of that state. The knowledge base (including the medical knowledge acquired from data) should be easily understandable so that the physician can judge the relevance of the rules and possibly develop his/her own rules that he/she may then integrate into the system to test their accuracy.
- Modules with a graphic interface, using contextual menus and widgets (user interface elements such as buttons and drop lists), try to make the user interface as usable and useful as possible for the medical staff. *Aiddiag* interface widgets mix graphical and artificial intelligence features, and they stay both in the Computing and Display modules. The integrating IUI in the *Aiddiag*'s architecture allows a more comprehensive view of the time course of the patient's state to be built, thereby giving it the ability to manage several therapeutic strategies depending on the patient's state. These strategies enable the synthetic visualization of a clinical situation by providing real-time video, imagery, diagrams and textual information. For example, the status bar module located at the top of the computer screen displays the current global status of the patient (e.g., OK or alarm) along with his medical history and a one-line text message (alarm text, event). The history can be browsed to see what happened some time ago or to examine a specific event. This knowledge-driven user interface is suitable to model and capture a substantial part of the physician's expertise.

In user interface management, a widget engine is a software service available to users to run and display applets on a graphical user interface [63]. The automatic linking of widgets includes detecting a trigger event associated with a first widget and providing access to a second widget in response to the trigger event in a respiratory system (Fig. 5). In such a respiratory system, a communication path or channel is established between widgets to share information to connect the left lung with the right lung. A widget link manager is used to automatically establish links between widgets and designate shared information, restrictions or arrangements.

The visible sequence in Fig. 5 derives contextual information from sensors that monitor the clinical situation and provides active features within the various components of the respiratory system. These then alert physicians with hints and stimuli on what is going on in each particular context. The user can select other components of interest and get details on demand or perform a zoom-in/zoom-out of the examined organ, causing a dynamic rearrangement of the organs and widgets that are displayed. This example illustrates how the *Aiddiag* interface widgets actually adapt themselves according to the context acquired from the medical sensors or user actions. Therefore, the computing tool allows an easy modeling of medical processes and provides a number of means of analysis (e.g., segmentation, clustering, detection of events) for both quantitative and functional properties (e.g., completion time, workloads, critical path, data flow, process type, multistep simulation). In addition, the explanation facility enables the user to see an explanation of the reasoning used by the knowledge base system to reach a given conclusion. The user can consequently ask "why" a conclusion was reached, and the system will explain its reasoning in a human-readable form.

4. Application to the intelligent (knowledge-based) visualization of clinical data

Medical user interfaces need to adequately take into account effective presentations and interactions with data, information, and knowledge. These goals are also achieved by the computer-assisted use of visual processing to gain understanding with three goals [14]:

- to visually present medical data in more intuitive formats that are easy to understand, easy to learn, easy to recognize, easy to navigate, and easy to manage;
- to visually magnify subtle aspects of the diagnostic, therapeutic, patient management, and healing process, which otherwise could be difficult to notice;
- to prevent information overload and allow members of the clinical staff to master larger quantities of previous information.

Medical user interfaces require some intelligent modules for knowledge acquisition and global automated real time monitoring, including the detection of technical hitches and human faults to reduce the lost work time [48]. For this aim, we link user interface to an inference engine in the *Aiddiag* tool. We propose *scenario recognition* as a technique for temporal reasoning in medical domains: the time-course of a clinical process is compared with a predetermined set of possible behaviors for this process [23]. This recognition allows us to anticipate forthcoming events from the partial instantiation of the recognized scenario and to intervene in the process, for example, to prevent specific expected (undesirable) situations.

The *Aiddiag*-associated tool provides some intelligent assistance modules that will more specifically help the specialists, including biologists and doctors, with precise facts that are difficult to explain otherwise. Indeed, the system can provide some medical advice unselected by the doctors but equally or even more accurate than

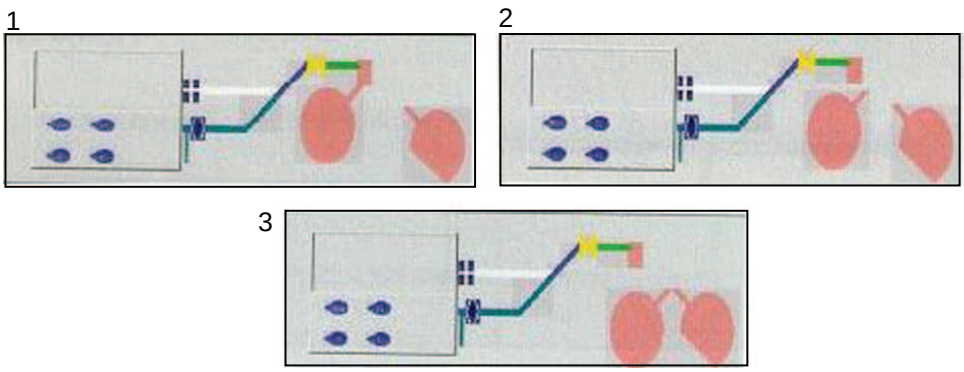

Fig. 5. A sequence of expert knowledge acquisition.

the doctor's options because it studies different scenarios according to its medical knowledge base and the evolutionary data of the pertaining diseases or infections. Specific information concerning the patient (e.g., morphology, type of pathology) and the foreseen therapy (e.g., adjustment of respiratory assistance to the patient's need) are specified by the physician in charge of the system's initialization. The user interface shows all useful information (respiratory parameters, blood-pressure, etc.) to the clinical staff and predicts an unknown state (the etiology of a clinical problem or future prognosis of patient) from the current known states. Thus, the interface enables the physicians to choose appropriate actions over time to influence the evolution of the patient's state.

Aiddiag's software architecture illustrates the interest of the proposed approach to help the user easily understand the knowledge base to visualize a reasoning or decision-making process. The benefits of the use of computers in health care will be delivered if we design computerized medical assistants that can efficiently relieve the clinical staff of repetitive tasks, and more importantly, really support practitioners in their decision-making in real time. Plan recognition and user modeling techniques enable the system to infer the user's goals and plans using evidence from the user's input and previous interactions with the system [46]. The basic idea is presented here. The system should observe the user's actions and interpret these actions in terms of his/her possible goals and plans. *Aiddiag* includes a limited goal recognition mechanism so that it may recognize the general context of the users' actions and possible problematic situations. *Aiddiag* supports semantic modeling and formal reasoning to provide context-aware actions (e.g., delivering contents, adapting applications or running applications), and it can free the user from learning complex command languages.

4.1. Detection and creation of medical sequences

Identifying user-dependent information that can be automatically collected helps build a user model (1) to predict what he/she wants to do next and (2) to perform relevant pre-processing tasks. Such information is often relational to the user's tasks and best represented by a set of sequences. Therefore, we need to know the sequence of actions made by the practitioner on the graphical user interface (GUI) to know which parameters he/she asked to be displayed and what modifications he/she made on these parameters. The idea is to learn by observing the user, i.e., by finding regularities in the user's behavior and using these regularities for prediction. Context management incorporates the widget management network that generates the necessary knowledge for a decision on the selected actions to provide context-aware support [42]. The widget management network is responsible for creating the *Think*! network representing the sequences of the actions and uses the rules in the knowledge base to activate adaptation. After a certain amount of time, which corresponds to the learning procedure, many sequences will exist in the network. An analysis of these sequences will show which of them are most used. The credit assignment of reinforcement learning is achieved by weighing the various types of sequential actions according to their observed occurrence. Which individual sequences or scenarios are largely responsible for the success or failure of an action in the medical context can then be determined. Thus, we will be able to implement sequences and associated rules given by the physicians and let the system refine them. After a certain learning time, removing inadequate sequences and associated rules would be possible.

After a validation procedure, the information generated by the activation function of the sequence processes will be used. The physician will not have to ask for specific parameters because they will be automatically displayed. The characteristic of the system is the binding of the widgets to the knowledge bases so that each of these widgets has associated semantics and the validation consequently has a strongly contextual meaning. For example, the validation of a sequence of actions aimed at the establishment of a diagnosis in lung pathology (e.g., affecting the transfer of gases and ventilation/perfusion relationships within the lungs) is well distinguished from the validation of another sequence of actions leading to a treatment in defects of respiratory control (e.g., affecting the regulation of gas exchange and therefore the respiratory pump).

From a cognitive viewpoint, the detection and creation of medical sequences are intended to provide optimal working conditions by removing barriers to quality, productivity, and safe human performance. To adapt the knowledge base to the user's problem solving style and to restructure the knowledge base to improve comprehensibility, having members of the health care staff who build themselves a mental representation of the patient's case is useful. The user interface widgets (buttons, drop lists, etc.) handled in the user interface aim to enable a physician to partly visualize certain types of information (trends, clinical conditions, view of respiratory system, time-stamped actions, etc.), share it with other physicians and make it evolve through cooperation with other physicians. The *Aiddiag* display can be updated in real time and also allow users to clearly interact with the GUI by selecting and modifying elements of the interface. Moreover, this user interface strives to minimize the cognitive load (i.e., the level of effort associated with thinking and reasoning [66]) associated with operating the interface itself so that all of a physician's cognitive resources are available for their tasks and the problems to solve. Thus, he/she would be more able to deal with some unusual or unforeseen situations by a better utilization of their clinical judgment to assess and treat their patients.

4.2. An illustration of sequence creation for user interface elements

The time of execution and temporal interval are pieces of information that may help capture the user's behavior. A sequence refers to a series of ordered consequences (events or episodes) and will be denoted throughout this paper by Pseq, but this technique can be understood as independent from the clinical domain. Sequences of actions are represented by connections between widget management networks of the active interface objects contained in the sequence. The battery device is used to detect the time between events. When an active object is selected by the user, a battery device is charged. The discharge of the batteries allows a simple mechanism to detect the end sequence, or more precisely, the beginning of a new sequence: if the charge of the previous object's battery is below a given threshold, the new click is considered as a part of a new sequence and is not connected to the previously clicked object. When the user clicks on an object, its widget management network looks for the previously clicked objects and creates a current sequence with queries in the different system components. A logically ordered set of Pseq elements holds valuable information, such as trends and patterns, which is used to improve medical monitoring and medical decisions. In the example shown in Fig. 6, the consequent Pseq is derived from its corresponding widget management network. End Tidal CO_2 ($ETCO_2$ or $PetCO_2$) determines the level of (partial pressure of) carbon dioxide released at the end of expiration, and it is directly related to the ventilation status of the patient. For example, $ETCO_2$ monitoring may be used to verify if the tracheal tube is placed in the trachea and not in the esophagus before ventilating the patient. $ETCO_2$ monitoring can also provide an early warning sign of shock for trauma patients, cardiac patients and any patient at risk for shock.

In the example shown in Fig. 7, VE denotes the minute ventilation of the lungs (i.e., the volume of air inhaled [inspired minute volume] or exhaled [expired minute volume] by the lungs in one minute). Minute ventilation is calculated by taking the tidal volume and multiplying it by the respiratory rate (the number of breaths per minute a person is taking). When an alarm occurs on the $ETCO_2$ (End- Tidal Carbon Dioxide – measured at the end of normal expiration), an

excitation is sent on the input of the $ETCO_2$ container, activating the corresponding network. When the physician wants to display the expiratory minute ventilation, an excitation is sent to the input of the VE (Volume of Expired Minute Ventilation) container activating its corresponding network. A process of the VE window manager network has an activation function that is looking for the object with the highest level of battery charge. Because the battery of the $ETCO_2$ object has the highest charge, a tube is created between the two networks at the level of the sequence process (Fig. 7). Increased $ETCO_2$ can reflect decreased VE or hypermetabolic states. Decreased $ETCO_2$ can be caused by increased ventilation or states of low or absent pulmonary blood flow or cardiac output [57].

Thus, if the respiratory rate (RR) object is selected a few times after the VE (Volume of Expired Ventilation) object, the VE and RR objects are connected (Fig. 8). If the tube already exists, its weight will be reinforced with a value inversely proportional to the difference of charges from the two batteries, i.e., it is reinforced more if the two clicks are close in time. If the previous sequence is repeated, then the weight of the tubes connecting the objects will be increased. When the learning phase is completed, the network is visualized using a 3D graphic tool. By exciting the starting point of a sequence (e.g., an event, such as the process representing the ETCO2 alarm in the sequence chains), propagations will be sent through all the sequences originating at this event. The 3D representation allows us to follow the paths followed by the excitations, which represent the sequences of the actions performed during the learning phase. The sequences that seem to be the most pertinent can then be introduced to the running of the system. More generally, given a set of respiratory parameters, relationships between attributes and parameters, such as the presence of one pattern implying the presence of another pattern, can be identified. Sequential pattern analysis is useful in the investigation of relationships between parameters over a period of time. For example, while monitoring ventilation, this analysis allows the identification of problems (e.g., ventilation asynchronies) before the patient's condition significantly deteriorates by providing an early warning of an impending respiratory crisis, followed by automatically optimizing the ventilatory settings [29].

To provide an intelligent assistance for the exploration of time-oriented clinical data, gaining knowledge about the problem solving steps from the observation of user activities and adapting the knowledge base according to the lessons learned (success or weak points) is important [33]. The computational model underlying the *Aiddiag* interface learns and detects ICU-related clinical patterns (using an existing medical knowledge base represented or previously learned by the network) in streaming time-oriented ICU clinical data, with the sequences of events being learned in the user interface. The sequential pattern analysis draws some learning from the "macro-operators" of the user actions on

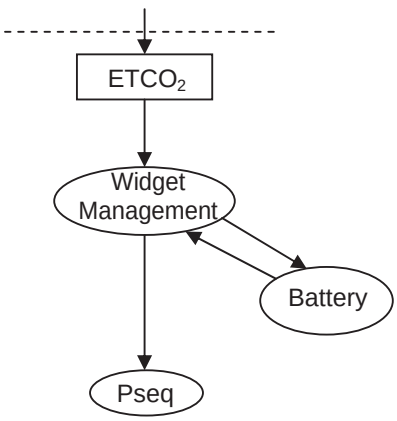

Fig. 6. Activation of the network related to ETCO2 (measured at the end of normal expiration).

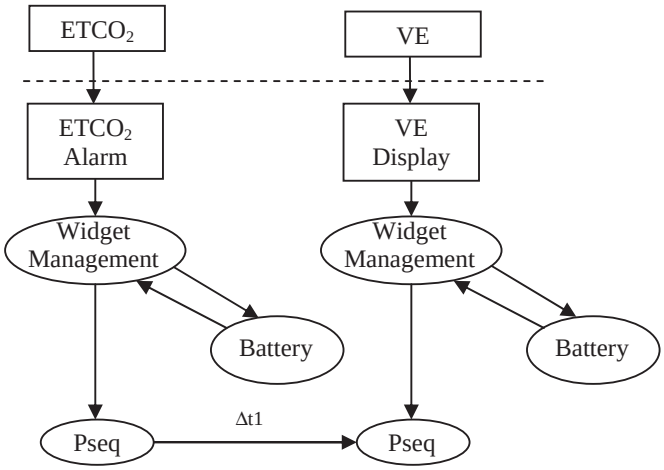

Fig. 7. Relationship between the measurements at end of normal expiration and the volume of expired ventilation.

the interface, such as a chain of actions performed once the user performs the first event in the chain. The GUI reasoning is able to suggest the appropriate chain to apply given a single prefix with contextual parameters when there are several potential continuations: contextual data are used to customize the way the inputs are processed and increase the precision of the information retrieval [31]. The purpose is to extract pieces of knowledge that will convey an improved understanding of the patient's clinical facts or circumstances and support helpful decision making processes.

5. A practical example for the monitoring of severe brain injury patients

The first evaluation of the characteristics of the *Aiddiag* architecture was performed in 15 rooms at the intensive care unit at the Fort-de-France University Hospital in Martinique (French West Indies). A study was completely carried out with the system on the clinical outcome of severe brain trauma patients after episodes of cranial hypertension [4]. The importance of continuous monitoring for neurosurgical patients has been outlined in the ICUs, and computerized monitoring has showed clinical advantages over manual recording (e.g., reliability of the number of critical episodes and the accuracy of estimating the severity of a patient's injury) [72].

The appropriate modeling and analysis of medical time-series allow behavioral models to be extracted after intensive computation. The neuro-symbolic engine is used for the implementation of severe brain trauma care algorithms and later comparison with the physician's behavior. The neural network can detect a clinical problem (critical patient condition) quickly, suggesting diagnostic procedures, while the knowledge extracted from it can explain the problem later on. If misguided, the information can be used to fine tune the learning system. In the case study, the *Aiddiag* framework combined intelligent temporal analysis and information visualization techniques for information feedback to caregivers and critical care recommendations for assessment purposes. In particular, the *Aiddiag* interface was able to perceive the patterns of expressive visualization and ease visual analysis for the detection of an intracranial hypertension situation. It facilitates the review and interpretation of the patient data by presenting color trends, plots, and charts on a screen display. Finally, the detection of certain critical patient conditions is improved, and they are displayed in a more relevant manner.

In addition, we mention the possible utilization of existing methods pertaining to the well-known and important task of mapping clinical knowledge and particularly clinical guidelines to the patient's electronic medical record. Examples of such mapping

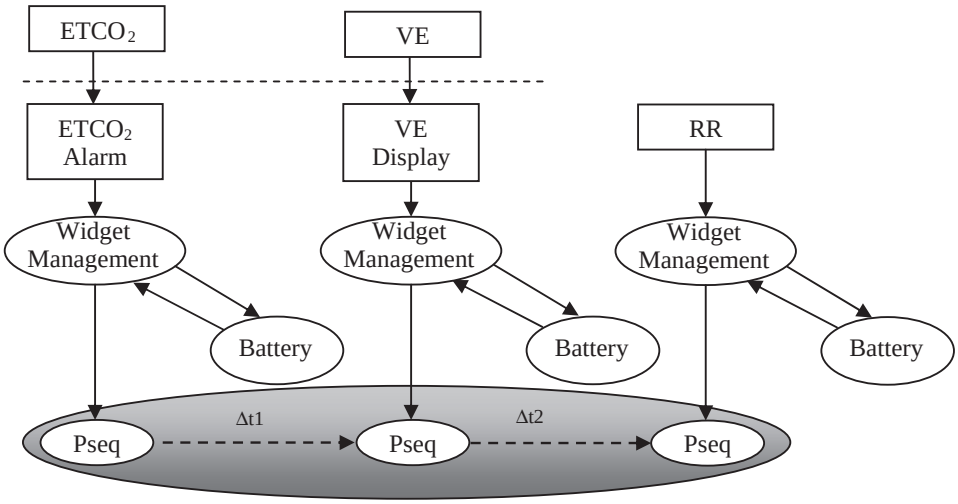

Fig. 8. A sequence of actions in a *Think*! network.

solutions that employ international standardized vocabularies and terminologies include those proposed by Boxwala et al. [8], German et al. [26] and Peleg et al. [55]. In particular, we have implemented a medical protocol for the ICU management of severe head injury [17] and incorporated the consensus guidelines produced by the Brain Trauma Foundation and the European Brain Injury Consortium. This protocol firstly considers the maintenance of cerebral perfusion pressure (CPP) and secondly the management of intracranial pressure (ICP) or mean arterial pressure (MAP). The specific patterns, regularities or sequences of events (scenarios) associated with this algorithm are used to evaluate the medical orders. The set of deleterious situations can be determined to assess the presence or absence of medical reactions and their relevance according to the theoretical objectives (Table 1 [47]).

In the *Aiddiag* user interface, both the acquired information and the calculated information are presented by data display modules. On the one hand, there are some generic display modules (e.g., physiologic signals or care plans) applicable to different activities. On the other hand, specific display modules are dedicated to a predefined activity [4]. An example of a physician-designed module for the monitoring of severe brain injury patients is shown in Fig. 9. The screen consists of three parts:

- *In the left frame of the window*, the monitoring frame permits the detection of certain clinical conditions such as hypoxemia (the decreased partial pressure of oxygen in the blood), hyperthermia (a greatly increased body temperature due to failed thermoregulation) or intracranial hypertension. A minimal increase in the intracranial pressure (ICP) due to compensatory mechanisms is known as stage 1 of intracranial hypertension. An increased ICP in the brain affects the nervous centers and causes periods of high vasoconstriction and blood pressure. The characteristics of stage 2 of intracranial hypertension include a compromise of neuronal oxygenation and systemic arteriolar vasoconstriction to increase the mean arterial pressure (MAP) and cerebral perfusion pressure (CPP). Jugular venous oxygen saturation (JVOS) measurements are used to monitor global cerebral oxygenation and metabolism. JVOS monitoring has been very useful in detecting cerebral ischemia (the lack of oxygen- and nutrient-rich blood flow in a given area of the brain).
- *In the middle frame of the window*, some trends are extracted and analyzed for monitoring and decision support. For example, the trends of systolic arterial pressure (SAP), arterial occlusion pressure (AOP), and human body temperature (T) are calculated and displayed. AOP determines the minimum cuff pressure that stops arterial blood flow distal to the cuff and provides a measure of the cuff pressure required to maintain a bloodless surgical field. SAP is measured when the pressure is at its highest in the arteries of the body, which generally occurs at the beginning of the cardiac cycle when the ventricles are contracting. Hypotension (an abnormally low blood pressure with SAP<90 mmHg) is a frequent and fundamental source of cerebral ischemia following severe brain injury.
- *In the right frame of the window*, the list of time-stamped actions are on view in the Interface Verification Plan (IVP), and the text block lines are used to inform nurses about past, current or future prescriptions (for example, Glucose+vitamin, Colloid bolus+Vasoconstrictor infusion, Mannitol/Furosemide). The color legibility and consistency of the text block lines are improved with backgrounds of a hue similar to the text or, for increased contrast, of a complementary hue. The purpose of a text box is to allow the user to input text information related to clinical events (such as allergic reactions resulting from medications) to make them available for further analysis.

This application has a user-friendly interface touchscreen that was adapted according to feedback from the caregivers. The middle and left frames of the window contain sufficient recorded information to justify the diagnosis and warrant the treatment. These frames permit clinicians to track patients and their progress, follow a course of treatment, and keep a service history. The proposed GUI development methodology potentially results in some improvements in patient safety and care provider performance and reduces medical decision-

Table 1
Specific scenarios and verification of the adequacy of the medical reactions that were performed.

Parameter patterns			Diagnosis	Medical orders		
ICP	MAP	CCP		ICP_{action}	MAP_{action}	MAP_{action} & ICP_{action}
Above threshold	Normal range	Normal range	ICP_{event}	Adequate	Inadequate	Excessive
Normal range	Below threshold	Below threshold	MAP_{event}	Inadequate	Adequate	Excessive
Above threshold	Normal range	Below threshold	ICP_{event}	Adequate	Inadequate	Excessive
Above threshold	Below threshold	Below threshold	MAP_{event} & ICP_{event}	Insufficient	Insufficient	Adequate
Normal range	Normal range	Normal range	Normal			

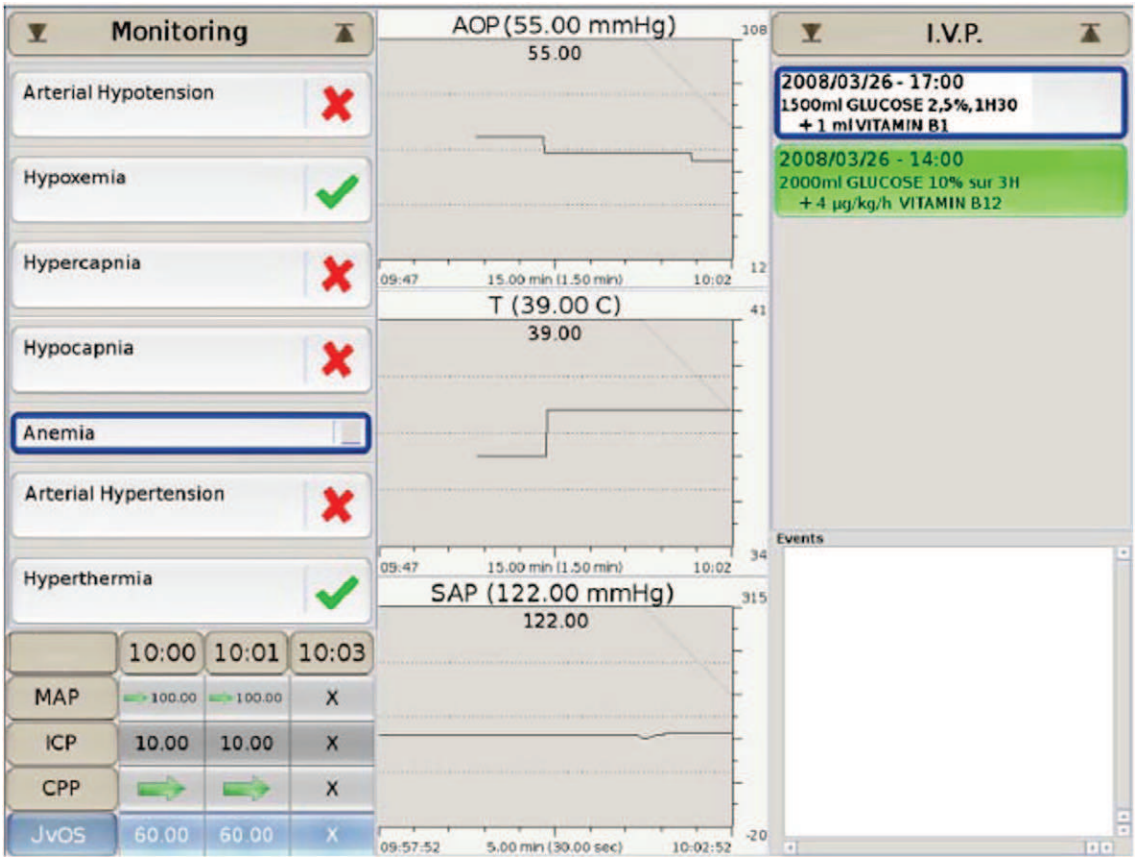

Fig. 9. A specific display module of the *Aiddiag* interface for the management of severe head injury.

making errors. Most reasoning and decision-making errors in medicine are execution mistakes (goal, intention or action mistakes) and evaluation mistakes (perception or interpretation mistakes) [54]. These mistakes are due to incorrect or incomplete knowledge or other factors (e.g., faulty heuristics, misperception, and information overload). The proposed approach enhances the clinicians' ability to perform tasks through the reduction of evaluation mistakes because they can better comprehend the information (e.g., the number and duration of critical episodes), analyze the situation (e.g., estimate the severity of a patient's injury), and make decisions (e.g., the intensity of the treatment required). In fact, clinical performance is improved by displaying context-relevant information in layouts (consistent with the user's clinical processes without appealing to any auxiliary interpretation) that provide advice and guidance to support the reasoning and decision-making of critical care health providers.

In addition, the hybrid architecture of the *Aiddiag* framework as it stands can be extended to deal with data mining methods without significant modifications to predict the evolution of patients in an ICU [58]. The evaluation consists of the application of ratings, structured interviews, and simulations to the system [43]. The interviews and simulations provide insights into the types of information that the clinical staff would need to have on-line (e.g., in monitoring situations) to interpret developing trend data more efficiently. Feedback from the users who operated the computerized decision support for patient monitoring in the operating room (physicians, nurses, medical students) enabled the iterative adaptation of the interface design and interaction sequences to the monitoring and documentation tasks of the physician. Therefore, the enumeration of the possible solutions in terms of planning and actions optimization allows the identification of the possible action plans for the realization of a task. Such mechanisms enable users to improve their level of performance [32] as they are involved in their day-to-day activities using the IUI. The evaluation, which also included the usability aspects of the *Aiddiag* interface, was performed by our collaborators in the Fort-de-France University Hospital. They tested the effectiveness (complement to the collaborative knowledge construction), efficiency (work load or time required to use), and subjective satisfaction (annotation interfaces and visual feedbacks) by asking the user to complete various tasks (e.g., following a guideline or making diagnoses) to collect experimental feedback.

6. Conclusion and future work

Information representation and interaction style through the intensive care monitoring of very critically ill patients call for a visual and efficient analysis of that information for direct patient care at the bedside. We have described a methodology for the provision of a user-centered visual analysis to medical decision support systems that builds on an existing methodology (*Think*!) and an existing ICU monitoring system (*Aiddiag*). Using the *Think*! formalism, the *Aiddiag* data-acquisition software is a standalone application adapted to patient data recording from biomedical devices and to caregiver inputs. The underlying computational framework is used for a better integration of visual and analytical methods to filter, display, label, and highlight relevant medical information from patient time-oriented data. Thus, these methods may inform the physicians about a useful evolution of the patient's state of which the physician would otherwise not be aware. With improved user interfaces, such as graphical display and data analysis, the GUI reasoning (detection of changes in the context, panels, etc.) can support medical reasoning (e.g., diagnostic methods) with the advantages offered by an easy-to-use interaction. In addition, the hybrid reasoning architecture allows medical personnel to view the acquired data, assess the visual analysis processes in real-time, and occasionally influence the diagnostic process on the

application. The hybrid reasoning architecture learns the patterns of user actions in the interface and the acquired sequences represent in some sense the cognitive path followed by the physician after the event. The analysis of these sequences will allow us to extract medical knowledge from the interaction between the medical staff and the system when some elements of the context, such as the modification of a prescription, are also taken into account. Therefore, capturing domain-expert knowledge for further analysis with respect to medical guideline compliance is possible.

The described medical interface takes advantage of the graphical capabilities of the hybrid reasoning architecture to generate a visual analysis for adapting applications in critical care settings. The computational model underlying the interface detects ICU-related clinical patterns (using an existing medical knowledge base represented or previously learned by the network) in streaming time-oriented ICU clinical data. Consequently, it facilitates the diagnostic procedures and strategies by efficiently organizing the relevant information into the user interface of the medical monitoring systems and facilitates the actions required to achieve the target medical care in critical settings. The model not only aims to improve the working conditions of the users but also takes part in an evolution of safety and effectiveness by a reduction in errors, better control rates of risky procedures, and increases in health care quality. In contrast to visual interactive tools such as KNAVE-II [62] or [1] CareVis, which require a significant computer programming effort, the proposed tool is designed to facilitate the users' tasks and allow an easy handling by medical doctors to formalize their knowledge. This system is based on a human–computer collaborative approach involving contextual data exploration, semantic information modeling and knowledge construction in a close interaction with clinicians for knowledge formalization and capitalization in the ICU domain. Undoubtedly, many improvements can be made to the proposed project manipulation interfaces. Some results from evaluating the proposed approach in a real clinical setting and showing which concrete aspects are improved with regard to other approaches would be discussed. Many useful suggestions have been received from physicians during this experiment. We have analyzed and incorporated the following valuable comments and feedback collected during the test and evaluation process:

- A better understanding of how and when useful (general) adaptation techniques can improve the interaction between the interface and medical practitioners, such as the tools and methods that provide reliable development and the maintenance of the intelligent parts of the system taking into account contexts and expertise levels.
- Limitations have been detected during the intensive calculation of relevant sequences to clarify the 3D representation of the possible action plans. Fine adjustments of the computation module to obtain optimum performance will suppress these limitations. Artificial intelligence-controlled automated complex medical guidelines are under evaluation.

For future work, we wish to focus on a more detailed explanation on the World Wide Web based knowledge capitalization and sharing process to disseminate methodological advances in health informatics or in translational bioinformatics. Further work will possibly lead to study the impact of human and technological resources availability on the waiting time of admitted patients in ICU with a scheduling approach guided by the principles for prioritization of emergency response actions. In addition, we are taking account of computer network studies to support collaborative works between healthcare teams, and an economic approach is under consideration for the cost estimation of hospital services.

Acknowledgments

This work was partly funded by the European program FEDER, under the ISIS (Intelligent Survey for Information Systems) project.

References

[1] W. Aigner, S. Miksch, CareVis: integrated visualization of computerized protocols and temporal patient data, Artificial Intelligence in Medicine 37 (3) (2006) 203–218.
[2] W. Aigner, S. Miksch, W. Müller, H. Schumann, C. Tominski, Visualizing time-oriented data — a systematic view, Computers and Graphics 31 (3) (2007) 401–409.
[3] W. Aigner, S. Miksch, W. Müller, H. Schumann, C. Tominski, Visual methods for analyzing time-oriented data, Transactions on Visualization and Computer Graphics 14 (1) (2008) 47–60.
[4] L. Allart, C. Vilhelm, H. Mehdaoui, H. Hubert, B. Sarrazin, D. Zitouni, M. Lemdani, P. Ravaux, An architecture for online comparison and validation of processing methods and computerized guidelines in intensive care units, Computer Methods and Programs in Biomedicine 93 (1) (2009) 93–103.
[5] J. Andrade, J. Ares, R. García, J. Pazos, S. Rodríguez, A. Silva, Formal conceptualisation as a basis for a more procedural knowledge management, Decision Support Systems 45 (1) (2008) 164–179.
[6] M. Ben Ayed, H. Ltifi, C. Kolski, A.M. Alimi, A user-centered approach for the design and implementation of KDD-based DSS: a case study in the healthcare domain, Decision Support Systems 50 (1) (2010) 64–78.
[7] D. Boaz, Y. Shahar, A framework for distributed mediation of temporal-abstraction queries to clinical databases, Artificial Intelligence in Medicine 34 (1) (2005) 3–24.
[8] A.A. Boxwala, S. Tu, Q. Zeng, M. Peleg, O. Ogunyemi, R.A. Greenes, E.H. Shortliffe, V.L. Patel, Towards a representation format for sharable clinical guidelines, Journal of Biomedical Informatics 34 (3) (2001) 157–169.
[9] N. Bricon-Souf, C.R. Newman, Context awareness in health care: a review, International Journal of Medical Informatics 76 (1) (2007) 2–12.
[10] D. Calvelo, M.-C. Chambrin, D. Pomorski, P. Ravaux, Toward symbolisation using data-driven extraction of local trends for ICU monitoring, Artificial Intelligence in Medecine 19 (3) (2000) 203–223.
[11] M. Campos, J.M. Juárez, J. Salort, J. Palma, R. Marín, Reasoning in dynamic systems: from raw data to temporal abstract information, Neurocomputing 72 (4–6) (2009) 871–878.
[12] M.-C. Chambrin, P. Ravaux, A. Jaborska, C. Beugnet, P. Lestavel, C. Chopin, M. Boniface, Introduction of knowledge bases in patient's data management system: role of the user interface, Journal of Clinical Monitoring and Computing 12 (1995) 11–26.
[13] Y.-J. Chen, Development of a method for ontology-based empirical knowledge representation and reasoning, Decision Support Systems 50 (1) (2010) 1–20.
[14] L. Chittaro, Information visualization and its application to medicine, Artificial Intelligence in Medicine 22 (2) (2001) 81–88.
[15] L. Chittaro, C. Combi, Visualizing queries on databases of temporal histories: new metaphors and their evaluation, Data & Knowledge Engineering 44 (2) (2003) 239–264.
[16] L. Chittaro, C. Combi, G. Trapasso, Data mining on temporal data: a visual approach and its clinical application to hemodialysis, Journal of Visual Languages and Computing 14 (2003) 591–620.
[17] T.J. Clayton, R.J. Nelson, A.R. Manara, Reduction in mortality from severe head injury following introduction of a protocol for intensive care management, British Journal of Anaesthesia 93 (6) (2004) 761–767.
[18] S.B. Cousins, M.G. Kahn, The visual display of temporal information, Artificial Intelligence in Medicine 3 (6) (1991) 341–357.
[19] A.S. d'Avila Garcez, L.C. Lamb, D.M. Gabbay, Neural-Symbolic Cognitive Reasoning, Cognitive Technologies, Springer-Verlag, Berlin Heidelberg, 2009..
[20] B.M. Dawant, S. Uckun, E.J. Manders, D.P. Lindstrom, The SIMON project, model based signal acquisition analysis and interpretation in intelligent patient monitoring, IEEE Engineering in Medicine and Biology Magazine 1 (1993) 82–91.
[21] S. Delisle, B. Moulin, User interfaces and help systems: from helplessness to intelligent assistance, Artificial Intelligence Review 18 (2002) 117–157.
[22] M. Dojat, F. Pachet, Z. Guessoum, D. Touchard, A. Harf, L. Brochard, NeoGanesh: a working system for the automated control of assisted ventilation in ICUs, Artificial Intelligence in Medicine 11 (1997) 97–117.
[23] M. Dojat, N. Ramaux, D. Fontaine, Scenario recognition for temporal reasoning in medical domains, Artificial Intelligence in Medicine 14 (1–2) (1998) 139–155.
[24] R.F. Engle, Dynamic conditional correlation: a simple class of multivariate generalized autoregressive conditional heteroskedasticity models, Journal of Business & Economic Statistics 20 (3) (2002) 339–350.
[25] L. Findlater, J. McGrenere, Beyond performance: feature awareness in personalized interfaces, International Journal of Human Computer Studies 68 (3) (2010) 121–137.
[26] E. German, A. Leibowitz, Y. Shahar, An architecture for linking medical decision-support applications to clinical databases and its evaluation, Journal of Biomedical Informatics 42 (2) (2009) 203–218.
[27] C. Ghédira, P. Maret, J. Fayn, P. Rubel, Adaptive user interface customization through browsing knowledge capitalization, International Journal of Medical Informatics 68 (1–3) (2002) 219–228.
[28] B. Guijarro-Berdiñas, A. Alonso-Betanzos, O. Fontenla-Romero, Intelligent analysis and pattern recognition in cardiotocographic signals using a tightly coupled hybrid system, Artificial Intelligence 136 (1) (2002) 1–27.
[29] T. Guyet, C. Garbay, M. Dojat, Knowledge construction from time series data using a collaborative exploration approach, Journal of Biomedical Informatics 40 (2007) 672–687.
[30] R. Haux, Medical informatics: Past, present, future, International Journal of Medical Informatics 79 (9) (2010) 599–610.
[31] J.-Y. Hong, E.-H. Suh, S.-J. Kim, Context-aware systems: a literature review and classification, Expert Systems with Applications 36 (4) (2009) 8509–8522.
[32] H. Hubert, C. Guinhouya, L. Castra, S. Soubrier, C. Vilhelm, P. Ravaux, M. Lemdani, A. Durocher, F. Saulnier, Methodological approach for the evaluation of the performances of medical intensive care units, Journal of Critical Care 22 (3) (2007) 184–190.

[33] H. Jabrouni, B. Kamsu Foguem, L. Geneste, C. Vaysse, Continuous improvement through knowledge-guided analysis in experience feedback, Engineering Applications of Artificial Intelligence 24 (8) (2011) 1419–1431.
[34] B. Kamsu Foguem, V. Chapurlat, Requirements modelling and formal analysis using graph operations, International Journal of Production Research 44 (17) (2006) 3451–3470.
[35] B. Kamsu Foguem, T. Coudert, C. Béler, L. Geneste, Knowledge formalization in experience feedback processes: an ontology-based approach, Computers in Industry 59 (7) (2008) 694–710.
[36] J. Klein, O. Friman, M. Hadwiger, B. Preim, F. Ritter, A. Vilanova, G. Zachmann, D. Bartz, Visual computing for medical diagnosis and treatment, Computers and Graphics 33 (4) (2009) 554–565.
[37] D. Klimov, Y. Shahar, M. Taieb-Maimon, Intelligent visualization of temporal associations for multiple time-oriented patient records, Methods of Information in Medicine 48 (3) (2009) 254–262.
[38] D. Klimov, Y. Shahar, M. Taieb-Maimon, Intelligent querying, visualization, and exploration of the time-oriented data of multiple patients, Artificial Intelligence in Medicine 49 (1) (2010) 11–31.
[39] D. Klimov, Y. Shahar, M. Taieb-Maimon, Intelligent selection and retrieval of multiple time-oriented records, Journal of Intelligent Information Systems 35 (2) (2010) 261–300.
[40] C. Kolski, E. Le Strugeon, A review of intelligent human-machine interfaces in the light of the ARCH model, International Journal of Human Computer Interaction 10 (3) (1998) 193–231.
[41] S. Kumar, A. Sekmen, Single robot — multiple human interaction via intelligent user interfaces, Knowledge-Based Systems 21 (6) (2008) 458–465.
[42] O.B. Kwon, The potential roles of context-aware computing technology in optimization-based intelligent decision-making, Expert Systems with Applications 31 (3) (2006) 629–642.
[43] . E. Letsu-Dake, C.A. Ntuen, A case study of experimental evaluation of adaptive interfaces, International Journal of Industrial Ergonomics 40 (1) (2010) 34–40.
[44] A. Lowe, R.W. Jones, M.J. Harrison, The graphical presentation of decision support information in an intelligent anaesthesia monitor, Artificial Intelligence in Medicine 22 (2) (2001) 173–192.
[45] S. Martins, Y. Shahar, D. Goren-Bar, M. Galperin, H. Kaizer, L. Basso, D. McNaughton, M. Goldstein, Evaluation of an architecture for intelligent query and exploration of time-oriented clinical data, Artificial Intelligence in Medicine 43 (1) (2008) 17–34.
[46] M.F. McTear, Intelligent interface technology: from theory to reality? Interacting with Computers 12 (4) (2000) 323–336.
[47] H. Mehdaoui, L. Allart, D. Resiere, R. Valentino, B. Sarrazin, P. Ravaux, Information systems' contribution to patient care improvement: severe brain injury as a model, Reanimation 19 (6) (2010) 512–518.
[48] H. Mehdaoui, B. Sarrazin, I. El Zein, L. Allart, C. Vilhelm, S. Guerra, D. Zitouni, M. Lemdani, R. Valentino, A. Herbland, P. Ravaux. ISIS program: a new tool for medical research at the bedside in critical care units. 27th International Symposium on Intensive Care and Emergency Medicine, Brussels, Belgium, 27–30 March 2007. Critical Care 11 (Suppl 2) (2007) P439, http://dx.doi.org/10.1186/cc5599.
[49] S. Miksch, W. Horn, C. Popow, F. Paky, Utilizing temporal data abstraction for data validation and therapy planning for artificially ventilated newborn infants, Artificial Intelligence in Medicine 8 (6) (1996) 543–576.
[50] J. Mira, Symbols versus connections: 50 years of artificial intelligence, Neurocomputing 71 (4–6) (2008) 671–680.
[51] R. Oppermann, Adaptive User Support: Ergonomic Design of Manually and Automatically Adaptable Software, In: in: Reinhard Oppermann (Ed.), Contributors, Lawrence Erlbaum Associates, Hillsdale, New Jersey, USA, 1994, 253 pages.
[52] B. Pandey, R.B. Mishra, Knowledge and intelligent computing system in medicine, Computers in Biology and Medicine 39 (3) (2009) 215–230.
[53] S.C. Park, S. Piramuthu, M.J. Shaw, Dynamic rule refinement in knowledge-based data mining systems, Decision Support Systems 31 (2) (2001) 205–222.
[54] V.L. Patel, J. Zhang, N.A. Yoskowitz, R. Green, O.R. Sayan, Translational cognition for decision support in critical care environments: a review, Journal of Biomedical Informatics 41 (3) (2008) 413–431.
[55] M. Peleg, S. Keren, Y. Denekamp, Mapping computerized clinical guidelines to electronic medical records: knowledge-data ontological mapper (KDOM), Journal of Biomedical Informatics 41 (1) (2008) 180–201.
[56] W.E. Pracht, Model visualization: graphical support for DSS problem structuring and knowledge organization, Decision Support Systems 6 (1) (1990) 13–27.
[57] W. Rabitsch, A. Nikolic, P. Schellongowski, J. Kofler, P. Kraft, C.G. Krenn, T. Staudinger, G.J. Locker, P. Knöbl, R. Hofbauer, M. Frass, Evaluation of an end-tidal portable ETCO2 colorimetric breath indicator (COLIBRI), The American Journal of Emergency Medicine 22 (1) (2004) 4–9.
[58] J. Ramon, D. Fierens, F. Güiza, G. Meyfroidt, H. Blockeel, M. Bruynooghe, G. Van Den Berghe, Mining data from intensive care patients, Advanced Engineering Informatics 21 (3) (2007) 243–256.
[59] A. Rector, AIM: a personal view of where I have been and where we might be going, Artificial Intelligence in Medicine 23 (1) (2001) 111–127.
[60] Y. Shahar, C. Cheng, Intelligent Visualization and Exploration of Time-Oriented Clinical Data, Topics in Health Information Management 20 (2) (1999) 15–31.
[61] Y. Shahar, C. Cheng, Model-Based Visualization of Temporal Abstractions, Computational Intelligence 16 (2) (2000) 279–306.
[62] Y. Shahar, D. Goren-Bar, D. Boaz, G. Tahan, Distributed, intelligent, interactive visualization and exploration of time-oriented clinical data and their abstractions, Artificial Intelligence in Medicine 38 (2) (2006) 115–135.
[63] B. Shneiderman, C. Plaisant, M. Cohen, S. Jacobs, Designing the User Interface: Strategies for Effective Human-Computer Interaction, Fifth Edition Addison-Wesley Publ. Co, Reading, MA, USA, 2010. 606 pages.
[64] M. Stacey, C. McGregor, Temporal abstraction in intelligent clinical data analysis: A survey, Artificial Intelligence in Medicine 39 (1) (2007) 1–24.
[65] R. Sun, Artificial Intelligence: Connectionist and Symbolic Approaches, International Encyclopedia of the Social & Behavioral Sciences (2004) 783–789.
[66] J. Sweller, Cognitive load during problem solving: Effects on learning, Cognitive Science 12 (2) (1988) 257–285.
[67] F.T. Tehrani, Automatic control of mechanical ventilation. Part 2: The existing techniques and future trends, Journal of Clinical Monitoring and Computing 22 (6) (2008) 417–424.
[68] M. Tentori, J. Favela, M.D. Rodriguez, Privacy-aware autonomous agents for pervasive healthcare, IEEE Intelligent Systems 21 (6) (2006) 55–62.
[69] C. Vilhelm, P. Ravaux, D. Calvelo, A. Jaborska, M.-C. Chambrin, M. Boniface, Think!: a unified numerical-symbolic knowledge representation scheme and reasoning system, Artificial Intelligence 116 (1–2) (2000) 67–85.
[70] X. Wang, D.H. Jeong, W. Dou, S.-W. Lee, W. Ribarsky, R. Chang, Defining and applying knowledge conversion processes to a visual analytics system, Computers and Graphics 33 (5) (2009) 616–623.
[71] G.G. Yen, D. Acay, Adaptive user interfaces in complex supervisory tasks, ISA Transactions 48 (2) (2009) 196–205.
[72] E.R. Zanier, F. Ortolano, L. Ghisoni, A. Colombo, S. Losappio, N. Stocchetti, Intracranial pressure monitoring in intensive care: clinical advantages of a computerized system over manual recording, Critical Care 11 (1) (2007) R7.

Bernard Kamsu Foguem is an Assistant Professor at the National Engineering School of Tarbes (ENIT) of National Polytechnic Institute of Toulouse (INPT) and leads his research activities in the Production Engineering Laboratory (LGP) of ENIT-INPT, a research entity (EA 1905) of the University of Toulouse. He has a Master's in Operational Research (2000) from National Polytechnic Institute of Grenoble, and a PhD in Computer Science and Automatic (2004) from the University of Montpellier 2. His current interests are in Knowledge Representation, Visual Reasoning, Ontology-based Semantic Analysis and Knowledge Exploitation for Collaboration and Decision Support. Application domains include continuous improvement process, industrial maintenance management, conventional and traditional medicine. He has authored or co-authored twenty articles in scientific journals and international conferences. He also participates in the evaluation of research papers (reviewer activity) in several scientific journals. His work has received two "Best Paper Award" at conferences sponsored by the Institute of Electrical and Electronics Engineers (IEEE).

Germaine Tchuente Foguem is PhD student at the Lille2 University. She has a Master of Advanced Studies from the University of Yaounde I (Cameroon) in 2007, in the domain of synchronization in dynamic distributed systems, and a Research Master in automatic and decisional systems obtained in 2010 from ENIT-INPT of Tarbes (France). She is co-author of an article from his internship report of Research Master whose study focused on the competences management under uncertainty. She currently takes an active interest in complex signals analysis with the specific aim of improving the patient monitoring in intensive care units, through false alarm reduction strategies, to help clinicians to predict status changes for better patient care.

Laurent Allart obtained a M.Sc. degree in Bioinformatics from University of Lille (North, France) in 2003. He has developed software tools for their application in biomedical research and medical practice. His research interests focus on data acquisition from the biomedical equipment, software interface modelling and computerized guidelines.

Youcef Zennir received the State Engineer degree in Automatic from the University of Badji Mokhtar–Annaba–Algeria in 1998 and the Post-graduate degree in Industrial Automation from the University of Chambery–France in 2000. He received his Ph.D in Industrial Automation from Applied Sciences National Institute of Lyon, France (INSA of Lyon) in 2004. He is an assistant professor in Industrial automation, in the Department of Electrical Engineering at Skikda University, Algeria. His current research interests include Diagnostic Decision Support Systems, control of complex systems, Multi-actor Systems, Distributed Artificial Intelligence, Knowledge Electrical Engineering and Computer Science.

Christian Vilhelm has a PhD in Biomedical Engineering, obtained in 1998. He is teaching computer science at the University of Lille 2 (France). His primary interests are computer representation of complex experience-based heuristic knowledge, and computer security. Most of his research is done in the area of intensive care medicine. He is co-author of several articles in journals.

Hossein Mehdaoui is physician at Fort-de-France's university hospital, Martinique. He is the operational director of an innovation and research program in the domain of help in decision making using information technologies. He is also the CMO of the Critical Care Unit, Hyperbaric chamber Unit.

Djamel Zitouni has a PhD in mathematical and computer Science. He is a member of the EA2694 public health research unit, University of Lille 2, North of France. His research activities concern guideline automated medical. Most of his research works are applied in health care domain. He is an author of many papers in international conferences and scientific journals.

Hervé Hubert is full Professor of Health Engineering at the Lille University School of Health Engineering where he is in charge of the Risks Management Master, and member of the of Public Health laboratory at the University of Lille 2. Born in Marseilles (France) in 1969, he obtained his Ph.D. degree in Health Economic at the University of Lille 1 in 1998. His entire work is dedicated to medico-economic assessment and public health, more specifically to the area of hospital emergency care. His teaching and research interests focus on the micro-economic evaluation and optimisation of health, the role played by the behaviours of individual, and the evaluation of medical practices. Prof. Hervé Hubert is a member of several scientific societies and he is the organizer of the 1st international day of hospital logistics and health' optimization in Sousse (Tunisia, 2009). He is also co-founder and head of the French Cardiac Arrest registry. Prof. Hervé Hubert has published more than 40 articles in the field of medico-economic assessment and public health.

Mohamed Lemdani obtained his Ph.D in 1995. He is a professor of biomathematics at the faculty of pharmacy of Lille (University Lille 2, France) and the head of its departments of biomathematics. As a member of the "Public Health, EA 2694" research team, he specializes in biostatistics and mathematical models for biology and public health.
Mohamed LEMDANI is an author or a co-author of several scientific publications which address both theoretical mathematical framework and applications for life sciences.

Pierre Ravaux obtained his Ph.D in 1989. He is also a pharmacist and a lecturer at the faculty of pharmacy of Lille (University Lille 2, France). He is the head of the center of information resources at his university and supervises several programs of e-learning.
As a member of the "Public Health, EA 2694" research team, he specializes in information models for intensive care units, artificial intelligence for decision support systems for the patient and signal processing for human-data time series.
Pierre Ravaux has also acted as scientific manager for several public-health related international collaborative projects and is an author or a co-author of several scientific publications.