HAL open science

On the study of catalytic membrane reactor for water detritiation: Membrane characterization.

Jérémy Mascarade, Karine Liger, Michèle Troulay, Xavier Joulia, Xuân-Mi Meyer, Christophe Perrais, Silvano Tosti

▶ **To cite this version:**

Jérémy Mascarade, Karine Liger, Michèle Troulay, Xavier Joulia, Xuân-Mi Meyer, et al.. On the study of catalytic membrane reactor for water detritiation: Membrane characterization.. Fusion Engineering and Design, 2013, 88 (6-8), pp.844-848. 10.1016/j.fusengdes.2013.01.057 . hal-03523381

HAL Id: hal-03523381

https://hal.science/hal-03523381v1

Submitted on 12 Jan 2022

HAL is a multi-disciplinary open access archive for the deposit and dissemination of scientific research documents, whether they are published or not. The documents may come from teaching and research institutions in France or abroad, or from public or private research centers.

L'archive ouverte pluridisciplinaire **HAL**, est destinée au dépôt et à la diffusion de documents scientifiques de niveau recherche, publiés ou non, émanant des établissements d'enseignement et de recherche français ou étrangers, des laboratoires publics ou privés.

Open Archive Toulouse Archive Ouverte (OATAO)
OATAO is an open access repository that collects the work of Toulouse researchers and makes it freely available over the web where possible.

This is an author-deposited version published in: http://oatao.univ-toulouse.fr/
Eprints ID: 9935

To link to this article: DOI:10.1016/j.fusengdes.2013.01.057
http://dx.doi.org/10.1016/j.fusengdes.2013.01.057

To cite this version:

Mascarade, Jérémy and Liger, Karine and Troulay, Michèle and Joulia, Xavier and Meyer, Xuân-Mi and Perrais, Christophe and Tosti, Silvano *On the study of catalytic membrane reactor for water detritiation: Membrane characterization.* (2013) Fusion Engineering and Design, vol. 88 (n° 6-8). pp. 844-848. ISSN 0920-3796

Any correspondence concerning this service should be sent to the repository administrator: staff-oatao@listes-diff.inp-toulouse.fr

On the study of catalytic membrane reactor for water detritiation: Membrane characterization

Jérémy Mascarade[a,*], Karine Liger[a], Michèle Troulay[a], Xavier Joulia[b], Xuan-Mi Meyer[b], Christophe Perrais[a], Silvano Tosti[c]

[a] CEA, DEN, DTN\STPA\LIPC Cadarache, F-13108 Saint Paul-lez-Durance, France
[b] CNRS, Laboratoire de Génie Chimique, F-31030 Toulouse, France
[c] ENEA, UTFUS, C.R. ENEA Frascati, Via E. Fermi 45, 00044 Frascati (RM), Italy

HIGHLIGHTS

- ► Catalytic palladium based membrane reactor is studied for ITER tritium waste management.
- ► Concentration polarization effect was highlighted by two-dimensional mass transfer model.
- ► Mass transfer resistance due to concentration polarization is reduced by the increase of fluid velocity.
- ► Concentration polarization phenomenon is enhanced by the decrease of non-permeable species content in the feed stream.

Keywords:
Tritium waste
Catalytic membrane reactor
Isotope exchange
Detritiation
Heavy water

ABSTRACT

Tritium waste recycling is a real economic and ecological issue. Generally under the non-valuable Q_2O form (Q = H, D or T), waste can be converted into fuel Q_2 for a fusion machine (e.g. JET, ITER) by isotope exchange reaction $Q_2O + H_2 = H_2O + Q_2$. Such a reaction is carried out over Ni-based catalyst bed packed in a thin wall hydrogen permselective membrane tube. This catalytic membrane reactor can achieve higher conversion ratios than conventional fixed bed reactors by selective removal of reaction product Q_2 by the membrane according to Le Chatelier's Law.

This paper presents some preliminary permeation tests performed on a catalytic membrane reactor. Permeabilities of pure hydrogen and deuterium as well as those of binary mixtures of hydrogen, deuterium and nitrogen have been estimated by measuring permeation fluxes at temperatures ranging from 573 to 673 K, and pressure differences up to 1.5 bar. Pure component global fluxes were linked to permeation coefficient by means of Sieverts' law. The thin membrane (150 μm), made of Pd–Ag alloy (23 wt.$\%_{Ag}$), showed good permeability and infinite selectivity toward protium and deuterium. Lower permeability values were obtained with mixtures containing non permeable gases highlighting the existence of gas phase resistance. The sensitivity of this concentration polarization phenomenon to the composition and the flow rate of the inlet was evaluated and fitted by a two-dimensional model.

1. Introduction

Conventional gaseous streams detritiation techniques use a two steps process of catalytic oxidation, to convert hydrogen containing gaseous species into vapor, followed by a physical getter such as adsorber [1–3] or absorber [4]. All these techniques have the same drawback; they produce great amounts of tritiated water. Admittedly, these volumes can be reduced either by concentration of gaseous stream by means of hollow fiber organic membranes [5] or by recycling in the tritium plant, but using dense palladium based membrane reactor can avoid them.

The concept of coupling a hydrogen perm-selective membrane and a transition metal-coated amorphous support has already been studied for fusion applications such as the Impurity Processing module of JET Active Gas Handling System [6] or JET soft housekeeping detritiation [7,8].

These membrane reactors, based on a counter current isotopic swamping of tritiated species (i.e. molecular hydrogen, water and hydrocarbons) with protium, are generally designed considering that thermodynamic equilibrium of isotope exchange reaction is reached [8]. Nevertheless, to extend design tools to a wider range of operations, it is necessary to better understand the phenomena involved, in order to identify the rate limiting steps and thus provide a more accurate modeling of the process.

In order to provide all the parameters needed for membrane reactor scale-up, such as reaction laws and rate constants of

* Corresponding author. Tel.: +33 4 42 25 35 26; fax: +33 4 42 25 72 87.
E-mail address: jeremy.mascarade@cea.fr (J. Mascarade).

isotope exchange reactions, an instrumented pilot was built at CEA Cadarache. After some preliminary characterization tests, presented below, parametric study will be run in order to study system response to several external perturbations such as temperature, flow rate and composition. Results will then be used to fit a model accounting for mass, thermal and momentum transfer rates as well as reaction rates.

In this study, deuterium has been chosen as tritium representative.

2. Experimental devices

The pilot, whose flowsheet is represented in Fig. 1, was designed with three modules: a tubular fixed bed reactor, a permeator and a membrane reactor. By-pass system allows working in two different configurations:

- In parallel mode, modules are studied one by one; it is also possible to evaluate separately permeation and reaction kinetics.
- In series mode, larger amounts of impurities can be fed and impact of reaction products on the overall dedeuteration efficiency can be evaluated.

The membranes, supplied by ENEA Frascati, consisted of commercial $Pd_{77}Ag_{23}$ tubes. This alloy was chosen for its embrittlement resistance [9] and its high permeability [10]. These dense 10 mm diameter tubes have a net length of 487 mm and a wall thickness of 150 μm. They are hosted in 304 L stainless steel shells of 650 mm length, 1.5 mm wall thickness and 25 mm external diameter. As shown in Fig. 2, the membrane is in a finger-like configuration; one end is welded to a flange of the reactor's shell while the other is closed by a welded cap and linked to the opposite shell's flange by a prestressed spring avoiding membrane damages during warping and hydrogenation [11].

In this configuration, the feed stream, sent to the membrane lumen, is "decontaminated" through a protium stream, sent into the shell side in counter-current mode, thanks to isotope exchange reaction:

$$Q_2O + H_2 \leftrightarrow H_2O + Q_2 \quad (1)$$

where Q stands for protium or deuterium.

Non-permeable gases are collected via a small stainless tube put inside the Pd–Ag one and exit the module by the retentate stream whereas Q_2 permeates the membrane and leaves it by shell's outlet.

Unlike in the permeator, whose lumen is empty, the membrane reactor's lumen is filled with a Ni-based catalyst. This catalyst contains transition metals which activate hydrogen bonds and thus promotes both the isotope exchange reaction in the membrane's reactor and the hydrogenation/dehydrogenations reactions in the fixed bed reactor. This last one consists of a 304 L stainless steel tube of 350 mm length, 2 mm wall thickness and 20 mm external diameter. It is filled with stacked glass balls/catalyst particles/glass balls layers separated by sintered stainless steel sheets.

The reactor is brought to an operating temperature between 300 °C and 400 °C to avoid mechanical stress due to α and β phase coexistence in membrane bulk [12]. The membrane's close wall temperature is monitored by means of a K-type thermocouple.

Modules are connected to gas bottles and vapor generator through pressure and mass flow controllers. These provide gas mixtures of desired compositions and flow rates. In addition, modules outlets' streams are pressure controlled and their temperature and flow rates are monitored by a distributed control system (DCS).

Finally, all the modules' streams are linked to a mass spectrometer (MS), to get their on-line composition measurements, allowing partial mass balances calculations.

This pilot can process flow rates up to 300 mL (STP) min^{-1} in a wide range of gas mixtures (i.e. from 0 to 100% of each species except oxygen which composition must not exceed 2% to stay

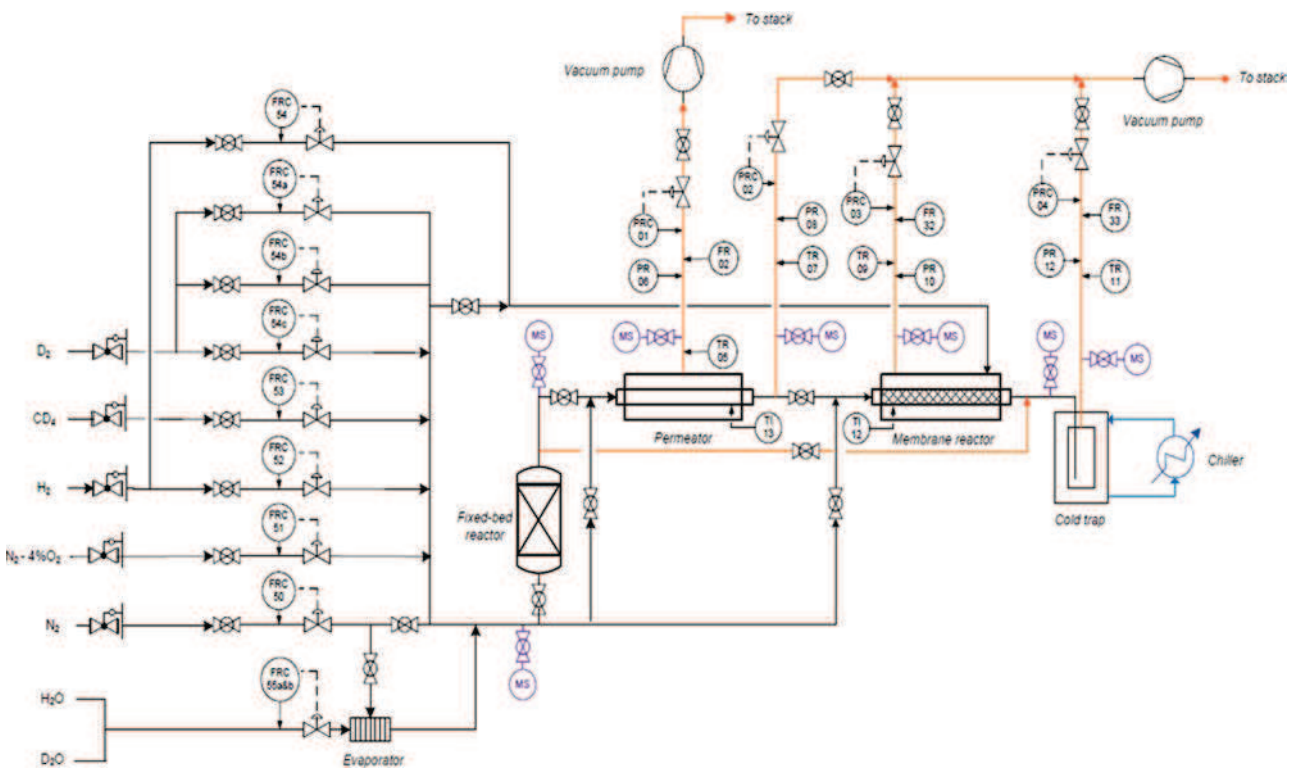

Fig. 1. Pilot flowsheet.

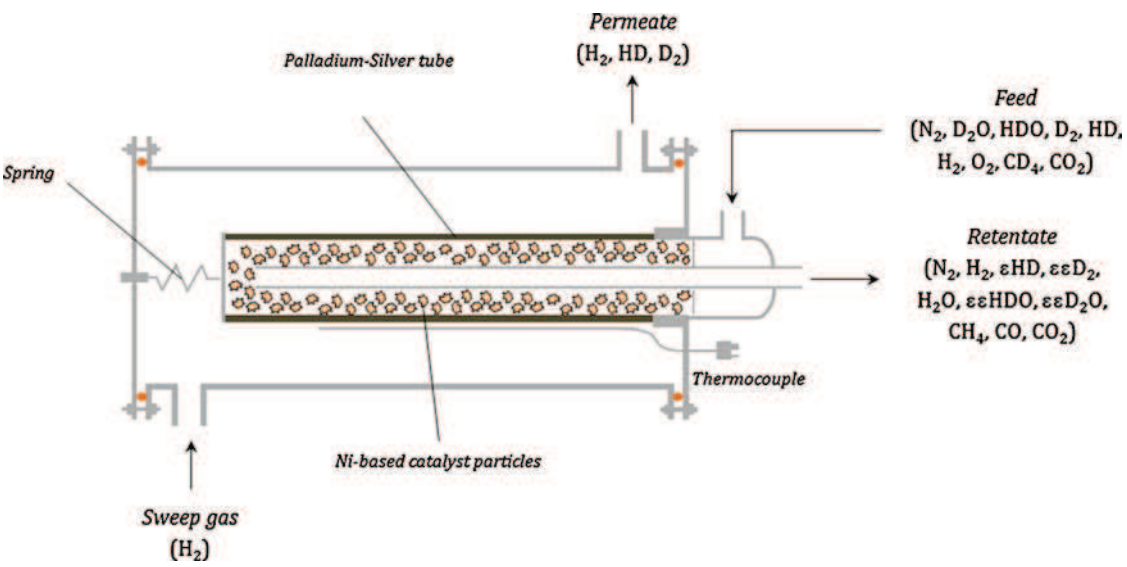

Fig. 2. Scheme of the membrane reactor.

beyond the lower explosive limit of the ternary N_2–H_2–O_2 mixture [7]).

During the preliminary tests, only pure H_2/D_2 and mixtures of N_2–H_2 have been used. These tests have been carried out to measure the membrane permeability and evaluate the mass transfer limitations due to concentration polarization.

3. Preliminary tests

3.1. Permeation tests

Hydrogen permeation through dense Pd-based membrane follows a solution-diffusion mechanism [13]. Permeation tests were done to assess Sieverts' law applicability. This one considers thermodynamic equilibrium state between gaseous H_2 and dissolved protium at membrane interface (i.e. kinetics of solubilization are widely faster than diffusion). It leads to the following equilibrium constant known as Sieverts' constant K_S:

$$K_S = \frac{C_H}{\sqrt{P_{H_2}}} \tag{2}$$

with C_H: the dissolved protium concentration (mol m^{-3}); P_{H_2}: the hydrogen partial pressure near the membrane surface (Pa).

Coupling this expression with Fick's first law of protium diffusion in the membrane leads to the Richardson expression [14]:

$$J_{H_2} = \frac{\phi_H}{2 \cdot \delta} \cdot \left(\sqrt{P_{H_2,\mathrm{ret}}} - \sqrt{P_{H_2,\mathrm{perm}}} \right) \tag{3}$$

with J_{H_2}: the transmembrane H_2 flux (mol m^{-2} s^{-1}); $\phi_H = K_S \cdot D_H$: the protium permeability (mol m^{-1} s^{-1} Pa$^{-0.5}$); D_H: the protium diffusion coefficient in the membrane bulk (m^2 s^{-1}); δ: the membrane thickness (m).

Investigated in the temperature range of 300–400 °C and for pressure difference between lumen and shell ranging from 0.2 to 1 bar, permeability data were collected versus the reciprocal of the absolute temperature according to the Arrhenius law (Fig. 3):

$$\phi_i = \phi_i^0 \cdot \exp\left(-\frac{Ea_i}{R \cdot T}\right) \tag{4}$$

with ϕ_i^0: the frequency factor (mol m^{-1} s^{-1} Pa$^{-0.5}$); Ea_i: the activation energy (J mol^{-1}); R: the ideal gas constant (J mol^{-1} K^{-1}); T: the absolute temperature (K).

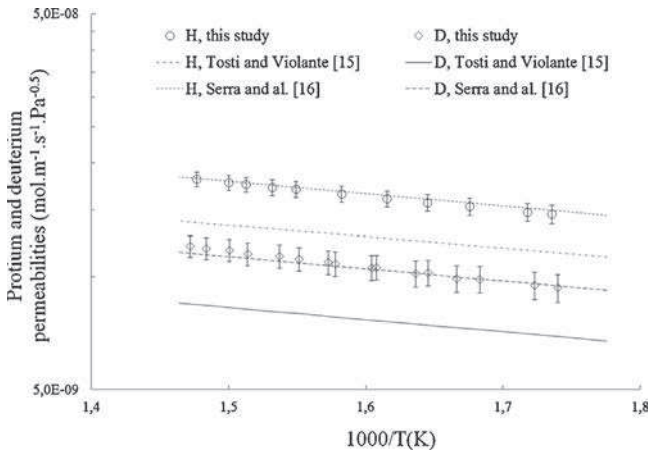

Fig. 3. Arrhenius plot (ln ϕ vs 1/T) of H and D permeabilities.

In order to avoid mass transfer limitations in the fluid phase, permeation tests have been carried out under pure H_2 and D_2 atmospheres. The results, reported in Table 1, fall into the interval of various data reported in the literature for the same kind of membranes.

Now that permeation regime was evaluated in the pilot's range of operating conditions, one can focus on the impact of non-permeable gases presence.

3.2. Concentration polarization

When a gas mixture is fed to the membrane's lumen, a depletion of the permeable component Q_2 is expected near the membrane

Table 1
Results of pure specie permeation: comparison with literature.

i-Specie	ϕ_i^0 (mol m^{-1} s^{-1} Pa$^{-0.5}$)	Ea_i (J mol^{-1})	Reference
H	6.12×10^{-8}	6876	This study
H	3.86×10^{-8}	5752	[15]
H	5.58×10^{-8}	6304	[16]
D	4.93×10^{-8}	7965	This study
D	2.52×10^{-8}	6172	[15]
D	3.43×10^{-8}	6156	[16]

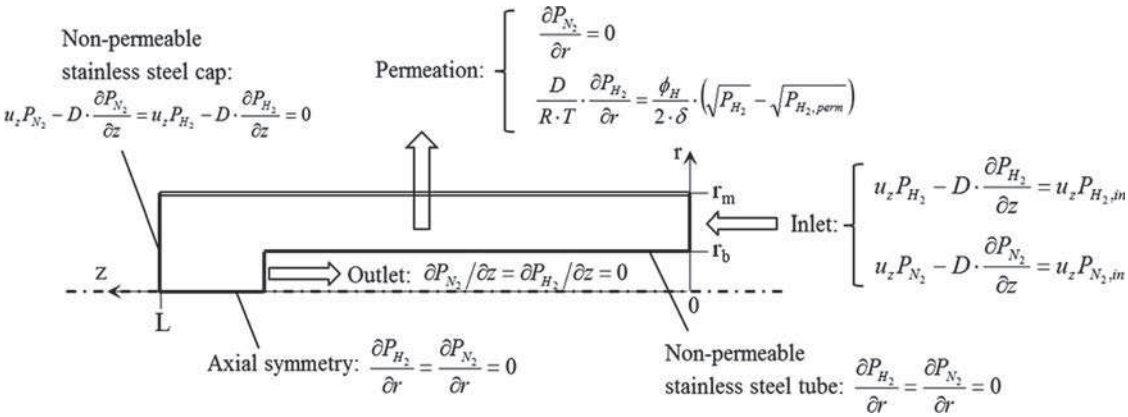

Fig. 4. Schematic of the computational domain and boundary conditions.

surface. To highlight this phenomenon, a simple two-dimensional model was built to map species distribution in the membrane reactor's lumen.

3.2.1. Modeling

If one assume that:

- flow regime is steady-state plug flow, the entire module is isothermal
- the lumen's pressure-drop can be neglected
- permeate's pressure and flow rate (shell side) remain constant
- the thermodynamic behavior is described by ideal gas equation of state
- membrane is defect free (infinite selectivity toward protium and deuterium)
- Axis-symmetric profiles along the reactor's centerline ($\partial/\partial\theta = 0$)

then, the mass transfer of species i can be modeled by a convection-diffusion equation (written in partial pressures):

$$\nabla\left(\vec{N}\right) = \frac{1}{R \cdot T} \cdot \nabla\left(-D \cdot \nabla P_i + \vec{u} \cdot P_i\right) = 0 \quad \forall_i \in [H_2, N_2] \tag{5}$$

with $\vec{N}$: the total flux (mol m^{-2} s^{-1}); $\vec{u}$: the fluid velocity (m s^{-1}) ${}^t\vec{u}\left(0; \varepsilon \cdot \dot{V}/S\right)$; ε: the catalyst bed porosity, $\dot{V}$: the actual volume flow rate (m^3 s^{-1}) S: the lumen's cross sectional area (m^2) D: the isotropic binary diffusion coefficient of N_2–H_2 mixture (m^2 s^{-1}) calculated as [17].

$$D = 2.66 \cdot 10^{-7} \cdot T^{3/2} \cdot \left[P_{ret} \cdot 10^{-5} \cdot \sqrt{\frac{2}{\left(1/M_{H_2} + 1/M_{N_2}\right)}} \cdot \left(\frac{\sigma_{H_2} + \sigma_{N_2}}{2}\right)^2 \cdot \Omega_D\right]^{-1} \tag{6}$$

where M_i: the molecular weight of species i (g mol^{-1}), σ_i: the collision diameter determined from Lennard-Jones potential (Å), Ω_D: a function of $k_B \cdot T \cdot \left(\varepsilon_{H_2} \cdot \varepsilon_{N_2}\right)^{-0.5}$; ε_i: the Lennard-Jones force constant of i-specie (J); k_B: the Boltzmann constant (J K^{-1}).

Fig. 4 shows the 6 boundary conditions needed to resolve relation (5).

3.2.2. Results and discussion

This partial differential equations system was implemented in COMSOL Multipysics® 4.2 commercial code and resolved by PARDISO solver. Fig. 5 clearly highlights the decrease of permeation flux with the increase of nitrogen partial pressure in the feed. Indeed, for feed streams containing more than 10 mol.% of hydrogen, the membrane length is not sufficient to remove all the permeable species because the transmembrane hydrogen partial pressure difference still exist at the reactor's outlet, involving a permeation flux. This reveals an additional mass transfer resistance in the fluid phase [18] that one can write as an average pressure gradient in the gas phase (driving force) to flux ratio:

$$\bar{R}_g = \frac{1}{L} \cdot \int_L \frac{P_{H_2}\big|_{r=r_b} - P_{H_2}\big|_{r=r_m}}{1/S \cdot \iint_S N_{H_2} \cdot dr \cdot d\theta} \cdot dz \tag{7}$$

As shown in Fig. 6, this resistance (dotted line) can be decreased by increasing fluid velocity.

This phenomenon is due to nitrogen molecules brought to the membrane surface which generates a radial concentration gradient leading to a diffusive flux (from the membrane to the fluid bulk) facing the H_2 one. Increasing fluid velocity will increase nitrogen advection and smooth this gradient; it will also, by the same way, reduce this concentration polarization effect, allowing more hydrogen molecules to be brought to the membrane surface leading to a permeation flux improvement.

These preliminary tests also brought to the light the membrane infinite selectivity toward hydrogen and, by the same token, verified defect-free membrane assumption; indeed, no traces of nitrogen were revealed during permeate stream mass spectrometer analysis.

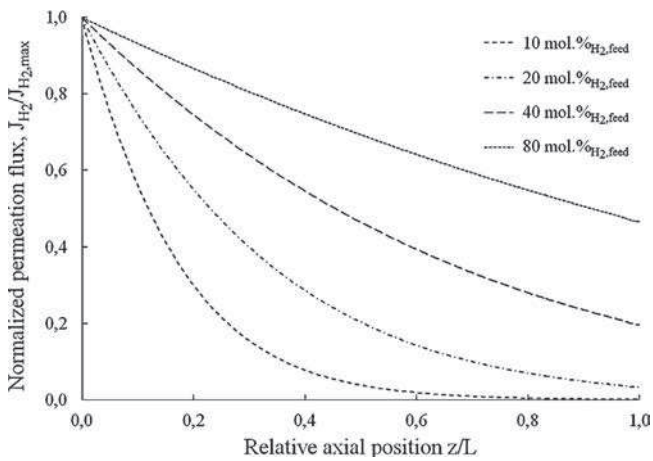

Fig. 5. Influence of H_2 inlet content on axial permeation profile $\Delta P_{H_2,inlet} = 0.4$ bar, $T = 645\,K$, $\dot{V} = 100$ mL(STP).min^{-1}.

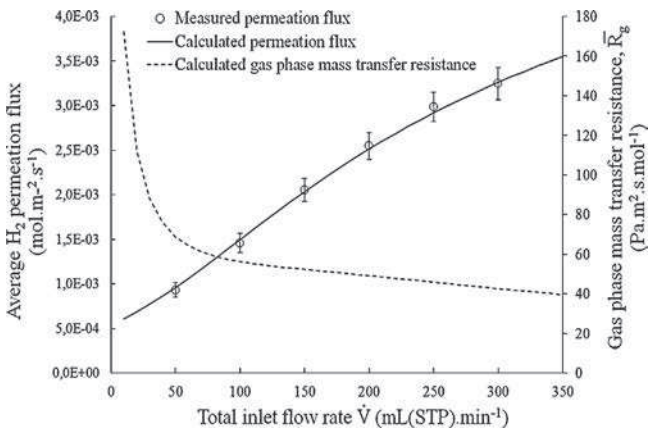

Fig. 6. Influence of inlet flow rate on permeation flux $\left(\Delta P_{H_2,\text{inlet}} = 1.5\,\text{bar}, T = 645\,\text{K}, y_{H_2,\text{inlet}} = 50\,\text{mol.\%}\right)$.

4. Conclusion

An instrumented lab-scale pilot dedicated to the phenomenological study of water dedeuteration by protium isotope swamping in palladium-silver membrane reactor was presented. Preliminary tests done on the reactor's membrane show its high permeability, in adequacy with values reported in open literature, and infinite selectivity toward hydrogen and its isotopes. Presence of non-permeable gases revealed a gas phase mass transfer resistance which could be reduced by increasing fluid velocity. Nevertheless, as it also shortened the contact time between the catalyst particles and the gas molecules, an optimization of the operating conditions is needed to maximize the conversion capabilities of the membrane reactor.

References

[1] S. Heinze, et al., French experience in tritiated water management, Fusion Engineering and Design 69 (2003) 677–770.
[2] S. Beloglazov, et al., Configuration and operation of detritiation systems for ITER Tokamak complex, Fusion Engineering and Design 85 (2010) 1670–1674.
[3] R.S. Wilms, et al., Mathematical comparison of three tritium system effluent HTO cleanup systems, Fusion Science and Technology 41 (2002) 974–980.
[4] A.N. Perevezentsev, et al., Wet scrubber technology for tritium confinement at ITER, Fusion Engineering and Design 85 (2010) 1206–1210.
[5] M. Le Digabel, et al., Application of gas separation membranes to detritiation systems, Desalination 148 (2002) 297–302.
[6] M. Glugla, et al., A Permcat reactor for impurity processing in the JET active gas handling system, Fusion Engineering and Design 49–50 (2000) 817–823.
[7] X. Lefebvre, et al., Preliminary results from a detritiation facility dedicated to soft housekeeping waste, Fusion Engineering and Design 87 (2012) 1040–1044.
[8] S. Tosti, et al., Design of Pd-based membrane reactor for gas detritiation, Fusion Engineering and Design 86 (2011) 2180–2183.
[9] J.B. Hunter, Silver-palladium films for separation and purification of hydrogen. U.S. patent 2,773,561 (1956).
[10] S. Uemiya, et al., Hydrogen permeable palladium-silver alloy membrane supported on porous ceramics, Journal of Membrane Science 56 (1991) 315–325.
[11] S. Tosti, et al., Mechanical design of a PERMCAT reactor module, Fusion Engineering and Design 82 (2007) 153–161.
[12] A.G. Knapton, Palladium alloys for hydrogen diffusion membranes: a review of high permeabiliy materials, Platinum Metals Review 21 (1977) 44–50.
[13] A. Caravella, et al., Modelling and simulation of hydrogen permeation through supported Pd-alloy membranes with a multicomponent approach, Chemical Engineering Science 63 (2008) 2149–2160.
[14] R.E. Buxbaum, A.B. Kinney, Hydrogen transport through tubular membranes of palladium-coated tantalum and niobium, Industrial & Engineering Chemistry Research 35 (1996) 530–537.
[15] S. Tosti, V. Violante, Numerical approach for a study of the hydrogen isotopes separation by palladium alloy membranes, Fusion Engineering and Design 43 (1998) 93–100.
[16] E. Serra, et al., Hydrogen and deuterium in Pd-25 pct Ag alloy: permeation, diffusion, solubilization, and surface reaction, Metallurgical and Material Transactions A 29A (1998) 1023–1028.
[17] R.C. Reid, et al., The Properties of Gases and Liquids, Mac Graw & Hill, 1987, pp. 582–583.
[18] J. Catalano, et al., Influence of the gas phase resistance on hydrogen flux through thin palladium-silver membranes, Journal of Membrane Science 339 (2009) 57–67.