HAL open science

Load allocation problem for optimal design of aircraft electrical power system

Xavier Giraud, Marc Sartor, Xavier Roboam, Bruno Sareni, Hubert Piquet, Marc Budinger, Sébastien Vial

To cite this version:

Xavier Giraud, Marc Sartor, Xavier Roboam, Bruno Sareni, Hubert Piquet, et al.. Load allocation problem for optimal design of aircraft electrical power system. International Journal of Applied Electromagnetics and Mechanics, 2013, 43 (1-2), pp.1-13. 10.3233/JAE-131708 . hal-03523348

HAL Id: hal-03523348

https://hal.science/hal-03523348

Submitted on 12 Jan 2022

HAL is a multi-disciplinary open access archive for the deposit and dissemination of scientific research documents, whether they are published or not. The documents may come from teaching and research institutions in France or abroad, or from public or private research centers.

L'archive ouverte pluridisciplinaire **HAL**, est destinée au dépôt et à la diffusion de documents scientifiques de niveau recherche, publiés ou non, émanant des établissements d'enseignement et de recherche français ou étrangers, des laboratoires publics ou privés.

Open Archive Toulouse Archive Ouverte (OATAO)
OATAO is an open access repository that collects the work of Toulouse researchers and makes it freely available over the web where possible.

This is an author-deposited version published in: http://oatao.univ-toulouse.fr/
Eprints ID: 10023

DOI:10.3233/JAE-131708
Official URL: http://dx.doi.org/10.3233/JAE-131708

To cite this version:
Giraud, Xavier and Sartor, Marc and Roboam, Xavier and Sareni, Bruno and Piquet, Hubert and Budinger, Marc and Vial, Sébastien *Lod allocation problem for optimal design of aircraft electrical power system.* (2013) International Journal of Applied Electromagnetics and Mechanics, vol. 43 (n° 1-2). pp. 1-13. ISSN 1383-5416

Any correspondence concerning this service should be sent to the repository administrator:
staff-oatao@inp-toulouse.fr

Load allocation problem for optimal design of aircraft electrical power system

X. Giraud[a,*], M. Sartor[b], X. Roboam[c], B. Sareni[c], H. Piquet[c], M. Budinger[b] and S. Vial[a]
[a]*Airbus Operation SAS, Toulouse Cedex, France*
[b]*Université de Toulouse, ICA, Toulouse, France*
[c]*Université de Toulouse, LAPLACE, Toulouse, France*

Abstract. More and more electric systems are embedded in today aircraft. As a result, the complexity of electrical power system design is increasing and the need of generic and efficient design methods is today required. Among numerous design tasks, the allocation of electric systems on the busbars of the electrical power system is considered as an important one since it has a direct impact on the aircraft mass. But due to the high number of possible allocations and regarding the large diversity of potential sizing cases for the equipments, finding the optimal allocation of electric loads is a hard task. In this paper, the problem is formalized mathematically. Then, four stochastic optimization methods are assessed on complex load allocation problems. Based on this assessment, a genetic algorithm using niching method is considered as the most appropriate algorithm for solving this aircraft design problem.

Keywords: Electrical power system, inverse problem, niching genetic algorithm, operational research problems, optimal design

1. Introduction

Electrical power system (EPS) can be seen as the electricity supplier for the aircraft. This system must provide electric power to aircraft electric loads with a sufficient level of reliability and availability. EPS has a key role since it supplies several hundreds of aircraft systems including essential ones such as: computers for flight control actuators or electric motor drives for fuel pumps. As depicted in Fig. 1, EPS can be schematized as an electrical network constituted of a set of equipments: electrical power sources as main generators (GEN), auxiliary generators (APU GEN) and converters (CONV); busbars (B) providing different voltage levels; cables as feeders enabling to transfer electric power from the generators to the busbars; and connection/protection devices as contactors (C) enabling EPS reconfiguration according to EPS modes [1]. Busbars, contactors and electrical protection devices are installed in a distribution center located in the aircraft avionic bay in the nose fuselage. Loads (L) are installed all over the aircraft (electronic bay, wing, fuselage, cockpit. . .) and are not part of EPS. They must be allocated to a busbar in order to be supplied. The loads are then supplied through wires/cables [2]. For a conventional aircraft such as the Airbus A330, the EPS is composed of 2 main generators and 1 auxiliary generator providing 115/200 VAC power, 3 converters providing 28VDC power, and around 10 main busbars. This EPS is in charge of supplying more than 700 loads (from small loads demanding some W to significant loads demanding several kW).

*Corresponding author: X. Giraud, Airbus Operation SAS, 316 route de Bayonne, 31060 Toulouse Cedex 9, France. E-mail: xavier.giraud@airbus.com.

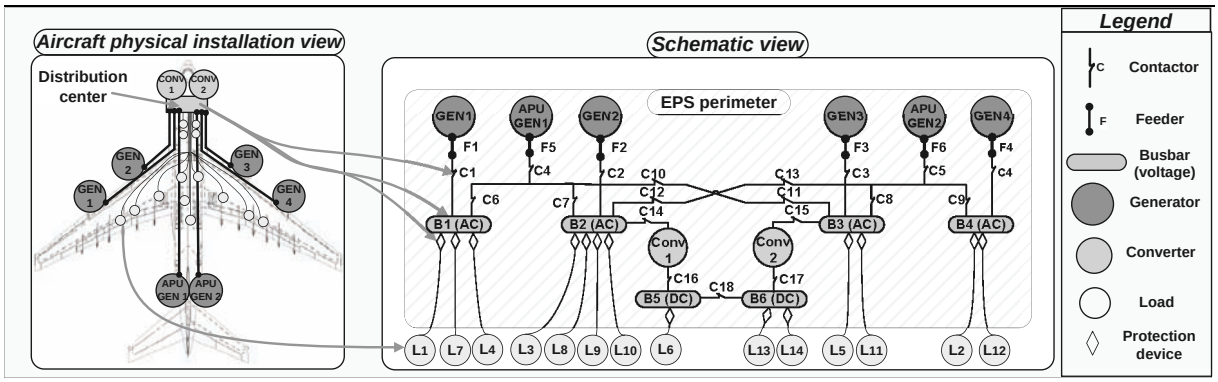

Fig. 1. EPS of 6 generators, 2 converters, 18 contactors, 6 busbars on which are allocated 14 loads (Aircraft physical installation and schematic view with a reduced number of loads).

Today the number of embedded electric systems tends to increase in new aircraft. This trend, illustrated in the paradigm of the *More Electrical Aircraft*, intends to substitute pneumatic or hydraulic powered systems by electric powered ones [3]. In the case of a bleedless aircraft, these new electric loads can consume up to 100 kW for air compressors. Challenges remain to be overcome both at equipment level and system architecture level. Among these challenges, the optimal design of EPS architecture becomes more and more complex. For aeronautical applications, mass is one of the most important criteria. For an aircraft such as the Airbus A380 which is seen as one application of the *More Electrical Aircraft* concept, the EPS mass is more than one ton. A potential mass reduction in the range of 2 to 3% is not negligible. Thus, in this paper, the objective is to minimize the EPS mass which is approximated by the mass of the sources: the generators with their associated feeders and the converters. Due to the EPS complexity, numerous activities must be carried out for achieving EPS optimal design. Among these activities, two strongly coupled key tasks can be highlighted:

1. *Definition of the reconfiguration strategy* (RS) representing a set of contactor configurations. For each EPS mode, defined by the operating states of the sources, a contactor configuration must be defined. Electrically speaking, this task consists in creating power paths between the busbars and the sources by choosing the states of the contactors (open/closed). Figure 2 shows two contactor configurations related to two different EPS modes. The closed contactors and associated power paths are highlighted in red color.
2. *Definition of the load allocation*. This task consists in allocating each load to a unique supply busbar. There is no constraint on the number of loads allocated to a busbar. Moreover, the number of loads allocated to a busbar can be different from one busbar to another. Each load requires a certain amount of power for its operation. In Fig. 2, the load L1 consumes 100 kW.

A global EPS design consists in two tasks treated in a successive way (Fig. 3). A method, based on the coupling of a knowledge-based system and graph-theory algorithms, enables to solve the task n°1 [1]. This task provides input data for the task n°2 consisting in finding the optimal load allocation. In this paper, we only focus on the task n°2. Thus the present work aims at defining and providing methods for the Load Allocation Problem of the aircraft Electrical Power System (EPS-LAP). EPS-LAP properties and complexity mainly come from two aspects:

– *High number of load allocation possibilities*. The number of possible load allocations grows in the x^n form, x being the number of candidate busbars to allocate the n loads. For a problem with 30 loads which can be connected to 3 busbars, the number of load allocations is: $3^{30} \cong 2.10^{14}$;

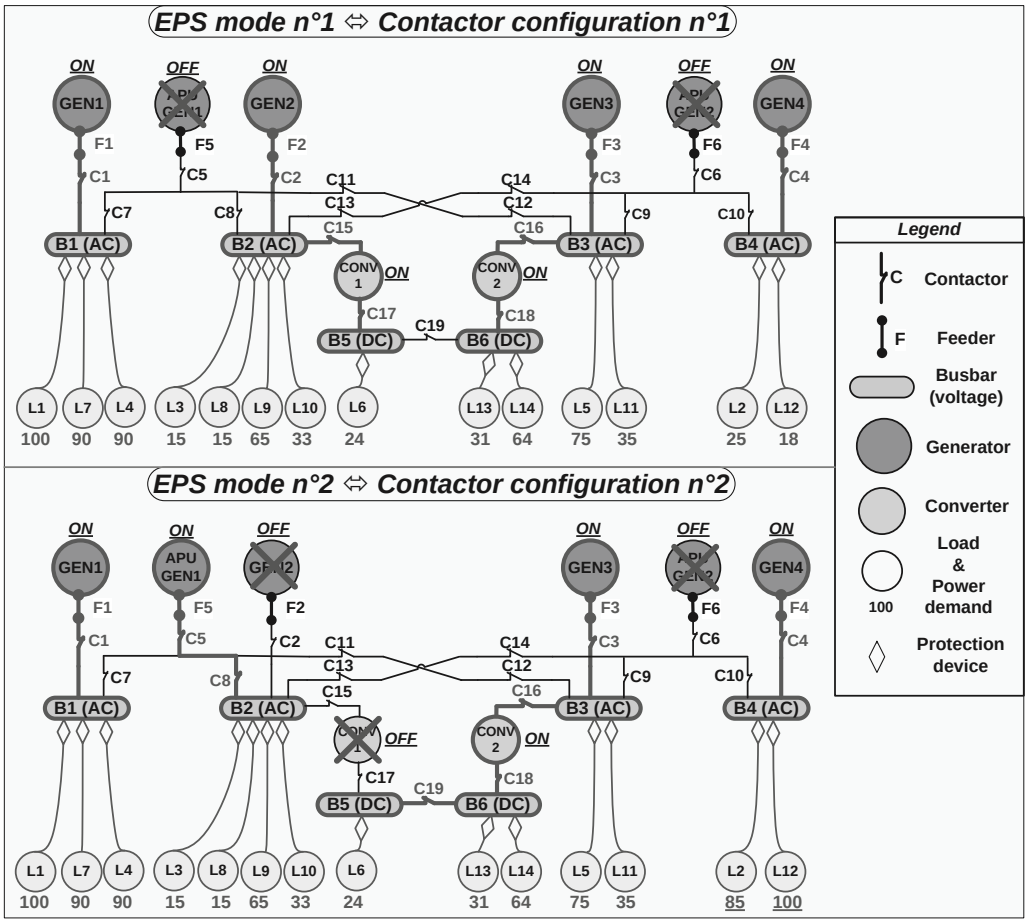

Fig. 2. Power paths and load power demand for two different EPS modes (i.e. contactor configurations).

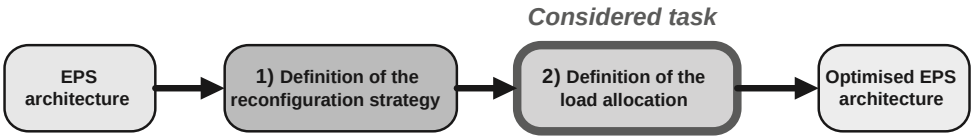

Fig. 3. Proposed global design flow for EPS design.

– *High number of different loading cases*. During the aircraft flight mission, the EPS must provide variable electric powers for a set of loading cases. The loading cases to be considered are derived from combinations formed from the following discrete parameters:

  ∗ 1) *EPS modes* (e.g. failure of generator n°1),
  ∗ 2) *Aircraft flight phases* (e.g. take-off),
  ∗ 3) *States of other aircraft systems* (e.g. failure of compressor),
  ∗ 4) *Environmental conditions* (e.g. temperature).

  For a problem having 15 EPS modes, 20 flights phases, 5 aircraft system states and 3 different environmental conditions, the number of loading cases is given by: $15 \times 20 \times 5 \times 3 = 4500$. From

one loading case to another, the sources can be differently solicited since the load power demand and corresponding power paths vary with respect to these loading cases. This feature is illustrated in Fig. 2 showing two different loading cases constituted by two different EPS modes. In EPS mode n°1, B2 is supplied by GEN2 whereas in EPS mode n°2 B2 is supplied by APU GEN1. Moreover, L2 and L12 respectively consume 25 and 18 kW in EPS mode n°1 whereas in EPS mode n°2 they respectively consume 85 kW and 100 kW. As a result, GEN4 must provide 43 kW in EPS mode n°1 whereas it must provide 185 kW in EPS mode n°2.

The paper is organized as follows. In Section 2, the generic mathematical formulation of EPS-LAP is presented. In Section 3, similarities and differences of EPS-LAP with other operational research problems are presented. In Section 4, four stochastic optimization methods aiming to solve EPS-LAP are assessed: Simulated Annealing (SA) [4], Standard Genetic Algorithm (SGA) [5], and Genetic Algorithm using Clearing Procedure as a niching method (GACP) [6] and Monte Carlo Simulation (MCS).

2. EPS-LAP mathematical formulation

2.1. Design variables

EPS-LAP consists in allocating $\mathcal{L}$ loads to $\mathcal{B}$ busbars. The decision of assigning the load l to the busbar b is modelled by the discrete variable x_{lb} as follows:

$$\forall\{l,b\} \in \{1,\ldots,\mathcal{L}\} \times \{1,\ldots,\mathcal{B}\}, \quad x_{lb} = \begin{cases} 1, & \text{if the load } l \text{ is allocated to the busbar } b \\ 0, & \text{otherwise} \end{cases} \tag{1}$$

2.2. Design objective

The EPS-LAP objective function F is to minimize the EPS mass $\boldsymbol{M_{EPS}}$. This mass is calculated as the sum of the $\mathcal{S}$ source masses $\boldsymbol{M_s}$:

$$F = \min\{M_{EPS}\} = \min\left\{\sum\nolimits_{s=1}^{\mathcal{S}} M_s\right\} \tag{2}$$

Each source s is sized by the maximum produced power $\boldsymbol{P_s}$. This power is derived by computing all the power produced by the source s in each loading case $\boldsymbol{k : p_s^k}$. Finally, by using a *mass* function, the source mass is derived:

$$\forall s \in \{1,\ldots,\mathcal{S}\}, \quad M_s = mass\,(P_s) \tag{3}$$

Such that

$$\forall s \in \{1,\ldots,\mathcal{S}\}, \quad P_s = \max\nolimits_{k\in\mathcal{K}}\left\{p_s^k\right\} \tag{4}$$

$$\forall s \in \{1,\ldots,\mathcal{S}\}, \quad p_s^k = \sum\nolimits_{l=1}^{\mathcal{L}} \sum\nolimits_{b=1}^{\mathcal{B}} x_{lb}.d_{sb}^k.\widetilde{p}_l^k \tag{5}$$

$$\forall\,\{s,b,k\} \in \{1,\ldots,\mathcal{S}\} \times \{1,\ldots,\mathcal{B}\} \times \{1,\ldots,\mathcal{K}\}, \tag{6}$$

$$d_{sb}^k = \begin{cases} 1, & \text{if there is a power path between the source } s \text{ and the busbar } b \text{ in the loading case } k \\ 0, & \text{otherwise} \end{cases}$$

Where $\widetilde{p}_l^k$ denotes the power demand of the load l in the loading case k.

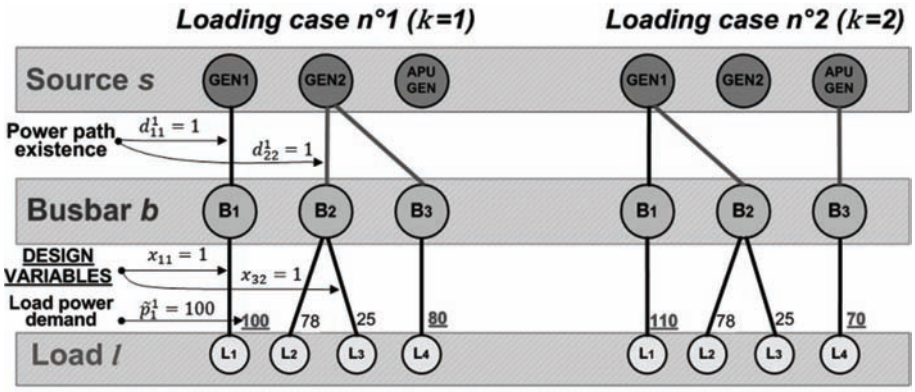

Fig. 4. A simplified EPS-LAP with a valid solution ($x_{11} = 1; x_{22} = 1; x_{32} = 1; x_{43} = 1$).

2.3. Design constraints

Several constraints are included in the problem formulation in order to take the particularities of EPS-LAP into account. For each load, a set of candidate busbars is first specified for its allocation. For example, electric fans of the aircraft air conditioning system must be allocated to High Voltage AC (HVAC) busbars. The parameter D_l models the set of candidate busbars of the load l:

$$\forall \{b, l\} \in \{1, \ldots, \mathcal{B}\} \times \{1, \ldots, \mathcal{L}\}, \quad x_{lb} = \begin{cases} \{0, 1\}, & \text{if } b \in D_l \\ 0, & \text{if } b \notin D_l \end{cases} \tag{7}$$

The loads must be allocated to only one busbar. This constraint is modeled as follows:

$$\forall l \in \{1, \ldots, \mathcal{L}\}, \quad \sum\nolimits_{b=1}^{\mathcal{B}} x_{lb} = 1 \tag{8}$$

The electric supply reliability required by "aircraft functions" is modelled by load allocation constraints. An "aircraft function" consists in merging several loads participating to the operation of a same function. For example, 4 hydraulic pumps carry out the function: *Generate hydraulic power*. Aircraft functions can be lost by losing one or several loads (systems) caused by the loss of busbars. Thus the types of load allocation constraints are of the following forms: "c_1: 2 loads cannot be allocated to the same busbar" or "c_2 *: 2 loads must be allocated to busbars located on different aircraft side"*... EPS-LAP is composed of a set of N load allocation constraints of A different types. The definition of, the load allocation constraint number i of type a, constraining the allocation of Q loads, is modelled by:

$$\forall a \in \{1, \ldots, A\}, \quad c_a^i\,(1, \ldots, Q) \tag{9}$$

The EPS is made of components of different types: normal generators, auxiliary generators, converters, etc. For maintenance and economic reasons, components belonging to the same type must be of the similar size: this issue is called "part number" which has to be minimized for the aircraft. For example, on the EPS depicted in Fig. 1, the generator APU GEN1 and APU GEN2 belong to the same type: *auxiliary generator*. The maximum mass is taken as the reference. In the cited example, this constraint is expressed by:

$$M_{APU\ GEN1} = M_{APU\ GEN2} = \max\{M_{APU\ GEN1}, M_{APU\ GEN2}\} \tag{10}$$

Table 1
Result summary of EPS-LAP example

	Sizing power P_s	Power/mass ratio (mass function)	Source mass M_s	Source mass M_s (after applying economic constraints)	EPS mass M_{EPS}

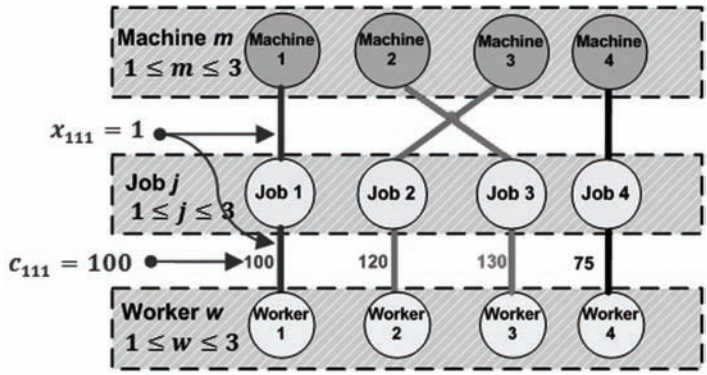

Fig. 5. Example of 3DAP solution ($\mathcal{W} = 4$; $\mathcal{J} = 4$; $M = 4$).

2.4. EPS-LAP example

In Fig. 4, a simplified EPS-LAP example of limited cardinality of: $\mathcal{B} = 3, \mathcal{L} = 4, \mathcal{S} = 3, \mathcal{K} = 2$ illustrates the main data of EPS-LAP. It is considered that the loads can be allocated on any busbar: $D_1 = D_2 = D_3 = \{1, 2, 3\}$ and there are two load allocation constraints $c_1^1\,(1, 2)$ and $c_1^2\,(3, 4)$ requiring that (L1, L2) and (L3, L4) must not be allocated on the same busbar. The changes between the two loading cases (k) are highlighted in red colour. In Table 1, the different values of P_s, M_s as well as the EPS mass M_{EPS} are depicted. Finally, it must be pointed out the optimal value is 139.1 kg and is obtained by the following decision variables: $x_{13} = 1$; $x_{21} = 1$; $x_{33} = 1$; $x_{41} = 1$ (other design variables are to 0).

3. EPS-LAP: A particular type of operational research problem

To the best of our knowledge, literature has not so far refers to problems of type LAP-EPS. Nevertheless, LAP-EPS has some features similar to those of two large families of well-known problems of operational research: the *three-dimensional assignment problem* (3DAP [7] also known as the *three-index assignment problem)* and the *multi-scenario knapsack problem* (MKP [8] also known as the *0–1 max-min knapsack problem* [9]).

3.1. Three-dimensional assignment problem

3DAP belongs to the category of *assignment problem*s [10]. 3DAP is usually illustrated by a manufacturing example in which $\mathcal{W}$ workers, $\mathcal{J}$ jobs, and M machines must be assigned together in order to minimize a total cost: $\sum_{w=1}^{\mathcal{W}} \sum_{j=1}^{\mathcal{J}} \sum_{m=1}^{M} c_{wjm}.x_{wjm}$ where the $x_{wjm} = 1$ models the worker w doing the job j on the machine m, 0 otherwise, and c_{wjm} is the cost of this assignment.

As EPS-LAP, 3DAP is composed of 3 different entities: Workers, jobs and machines. The *loads* could be considered as workers, the *busbars* as jobs, the *sources*as machines, and the *power or mass* as the cost. EPS-LAP looks like 3DAP since it has to assign *loads* (workers) to *busbars* (jobs) and *sources* (machines) in order to minimize a sum of *power or mass* (cost). The first difference comes from the decision variables. In 3DAP, the variables x_{wjm} assign workers to jobs and machines whereas in EPS-LAP, the assignments busbar/source are already given by the parameters d^k_{sb} (Eq. (6)). The decision variables x_{lb} (Eq. (1)) only assign loads to busbars. The second difference is related to the presence of loading cases. EPS-LAP can be seen as one 3DAP which is repeated over $\mathcal{K}$ loading cases and for which the cost values vary over the loading cases.

Both exact and heuristic methods have been proposed to solve 3DAP. Ref [11,12] use a branch and bound algorithm. A heuristic procedure is presented in [13]. In addition, several papers present meta-heuristic algorithms in order to generate a good solution or a set of good solutions for a reasonable computational effort: Tabu Search [14], Greedy Randomized Adaptive Search Procedure [15], Genetic Algorithm [16], or Simulated Annealing [17].

3.2. Multi-scenario knapsack problem

Knapsack problem (KP) [18] consists in assigning n items of non-negative weights and profits in one knapsack having a given weight capacity. The objective is to maximize the profit assigned to the knapsack while not exceeding the capacity constraint of the knapsack. *Multi-scenario knapsack problem* (MKP) is a variation of KP in which the profits of the items vary under several scenarios. The MKP objective is to fill the knapsack with a selected set of items so that the minimum total profit earned under all scenarios is maximized.

MKP has two features similar to EPS-LAP if we consider the *loads* as the items, the association *busbar-component* as knapsack, the *electric power* as the profit, and the *loading cases* as the scenarios. Firstly, the profit of each item can vary with respect to the scenarios. Secondly, the assignment decision in MKP is the same for all the scenarios while the profits vary with respect to the scenarios.

Ref [9,19] propose methods, based on branch and bound algorithm, to exactly solve MKP of limited size (90 items and 30 scenarios). Ref [8] introduces a method based on two steps to solve MKP: reduction of problem size by using a pegging test, then solving by a branch and bound algorithm. The method was tested on MKP having 1000 items and 30 scenarios. As explained in [20], the previous methods are only able to solve small-scale MKP in one hour of computation effort. Therefore [20] introduces a fast heuristic for large-scale MKP (10000 items and 100 scenarios). Ref [21] also presents a heuristic method based on two steps: finding of a feasible solution and then improvement of the solution by using an approach inspired by the Tabu Search meta-heuristic method.

3.3. Conclusion on the EPS-LAP positioning

EPS-LAP features can be identified in several operational research problems. Using the terminology of these problems, EPS-LAP may be considered as a particular type of operational research problems characterized by the following markers: *multi-scenario three-dimensional assignment problem*. It is underlined that exact methods cannot solve large-scale data problems. The branch and bound algorithm was tested for solving EPS-LAP but due to problem size, it was inefficient (even after several days of computation). Thus heuristics or meta-heuristic methods must be used in order to provide solutions of good quality for a reasonable computation effort since EPS-LAP is incorporated in an industrial design application. For this reason, it was decided to focus on meta-heuristic algorithms.

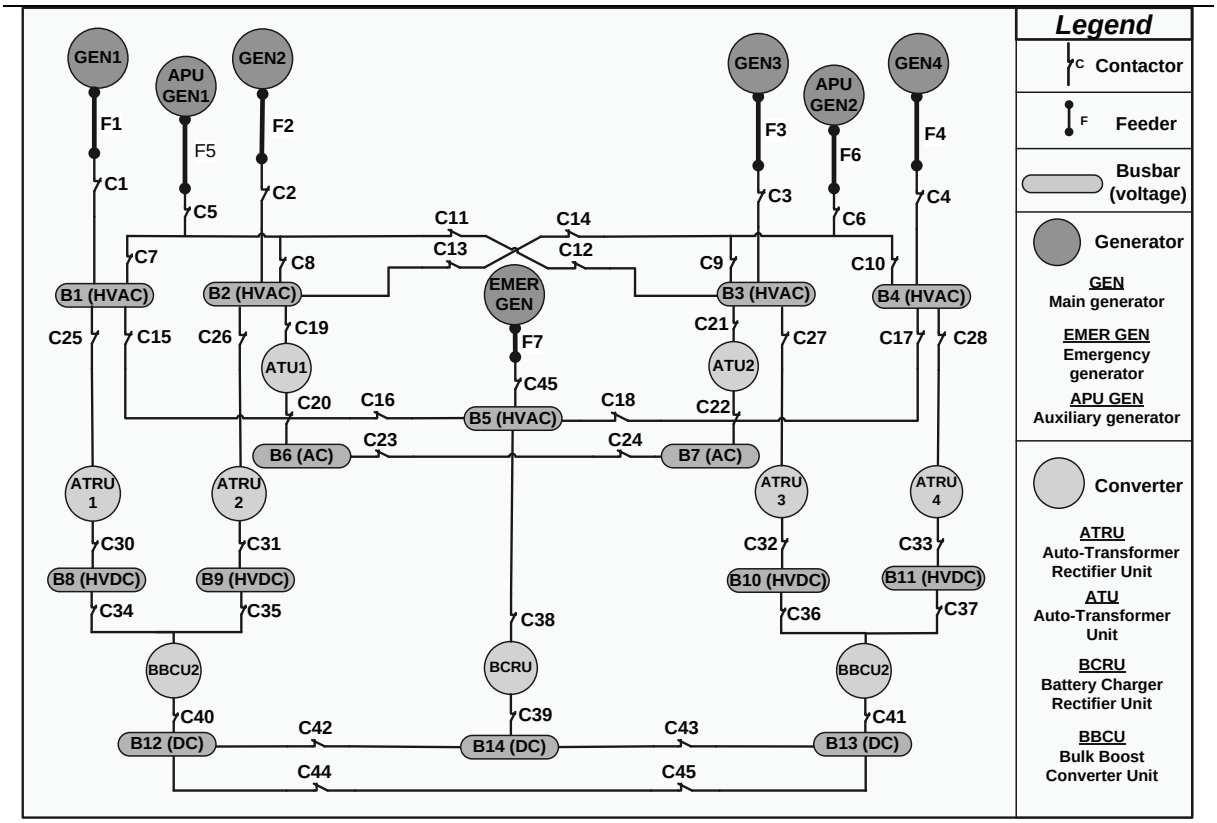

Fig. 6. Reference EPS architecture for the optimization method assessment.

4. Assessment of the different optimization methods

4.1. Assessed optimization methods

Four stochastic optimization methods are selected to solve EPS-LAP:

1. Simulated Annealing (SA) [4] is a meta-heuristic optimization method. Its principle is based on the physical process of heating a material and then slowly lowering the temperature. The assessed SA comes from the toolbox 'Optimization' of the numerical computing software Matlab [22]. The initial temperature is set to 350 and it decreases exponentially.
2. Standard Genetic Algorithm (SGA) [5] is a meta-heuristic optimization method classified as an evolutionary algorithm. It is based on the analogy of the natural evolution. The assessed SGA comes from [22]. The selection operation is achieved by the *roulette wheel selection*and a uniform crossover operation is realized. The algorithm is 'elitist' since the 2 best solutions are kept in the population.
3. Genetic Algorithm using Clearing Procedure as niching method (GACP) [6] is a genetic algorithm which intends to limit the main drawback of SGA: the genetic drift. Niching method consists in maintaining several solution populations in niches in the global population [23]. Individuals belong to the same niche if their distances are less than a given threshold. The clearing procedure preserves the best individual in each niche during the optimum seeking.
4. Monte Carlo Simulation (MCS) consists in generating a random value for each design variable.

Table 2
Solution distribution for 5 different reconfiguration strategies (RS)

RS	Number of optimal solution	Number of solutions providing an EPS mass differing from 1% of the minimum EPS mass	Number of solutions providing an EPS mass differing from 2% of the minimum EPS mass
N°1	8	832	5600
N°2	8	736	5498
N°3	2	60	594
N°4	16	640	5608
N°5	8	606	5218

The method efficiency is compared over the same total number of evaluations: 10000. For both genetic algorithms, this means that the generation number is set to 100 since the population size is composed of 100 individuals.

4.2. Problems of different complexity and form

Optimization methods are assessed on the EPS architecture depicted in Fig. 6 which is derived from the European Union funded project MOET (More Open Electrical Technologies). This architecture, which is representative of a modern more electrical aircraft, is composed of 16 sources ($\mathcal{S} = 16$): 7 generators with associated feeders and 9 converters of different types. Loads can be allocated to 14 different busbars ($\mathcal{B} = 14$) of different voltage levels (e.g.: HVAC: 230/400 VAC). On a *Quad Core 2.67* GHz machine, the optimization methods are assessed on 2 problems of different complexity:

- *A reduced size problem* composed of 30 loads ($\mathcal{L} = 30$) and 1452 loading cases ($\mathcal{K} = 1452$). The number of valid load allocations is 1.77 millions. In order to set a reference target, this problem is first solved in an exhaustive enumerative search way. The duration of the calculation is about one day (20 solution evaluations are performed per second). Thus the complete distribution of solutions, including the optimal solutions, is known. These results are used as references for the optimization method assessment.
- *A full size problem* composed of 80 loads ($\mathcal{L} = 80$) and 4410 loading cases ($\mathcal{K} = 4410$). These loads represent around 96% of the whole power demand of an actual industrial use case. The number of valid load allocations is estimated at 9.10^{33}. Due to the high computational burden, the optimal solution cannot be found by an exhaustive enumerative search way. For this problem, 3 solution evaluations are performed per second.

To test further the robustness of the optimization methods, the assessment is carried out with different reconfiguration strategies (RS). The different RS consist in different sets of parameters d_{sb}^{k} (Eq. (6)). Each RS leads to a new EPS-LAP to solve. As the optimization methods are all stochastic, they are run 10 times (for each problem and RS) and the run producing the best solution is kept.

4.3. Optimization methods applied to the reduced size problem

For the sake of clarity, results from only 5 RS are presented. But the four optimization methods were tested on 15 different RS and the results over this larger number of RS confirm the tendencies presented hereafter.

The number, form and performance of optimal solutions as well as the solution distribution could be different from one RS to another (see Fig. 7 and Table 2). Figure 7 shows the pseudo-Gaussian distribution of the solution performance with respect to the optimal solution performance (pu). In Table 2,

Table 3
Number of optimal solution found by the optimization methods (number of optimal solutions found by the complete enumeration of solutions)

RS	SA	SGA	GACP	MCS
N°1	1 (8)	1 (8)	5 (8)	0 (8)
N°2	0 (8)	0 (8)	6 (8)	0 (8)
N°3	0 (2)	1 (2)	2 (2)	0 (2)
N°4	0 (16)	0 (16)	7 (16)	0 (16)
N°5	1 (8)	1 (8)	4 (8)	0 (8)

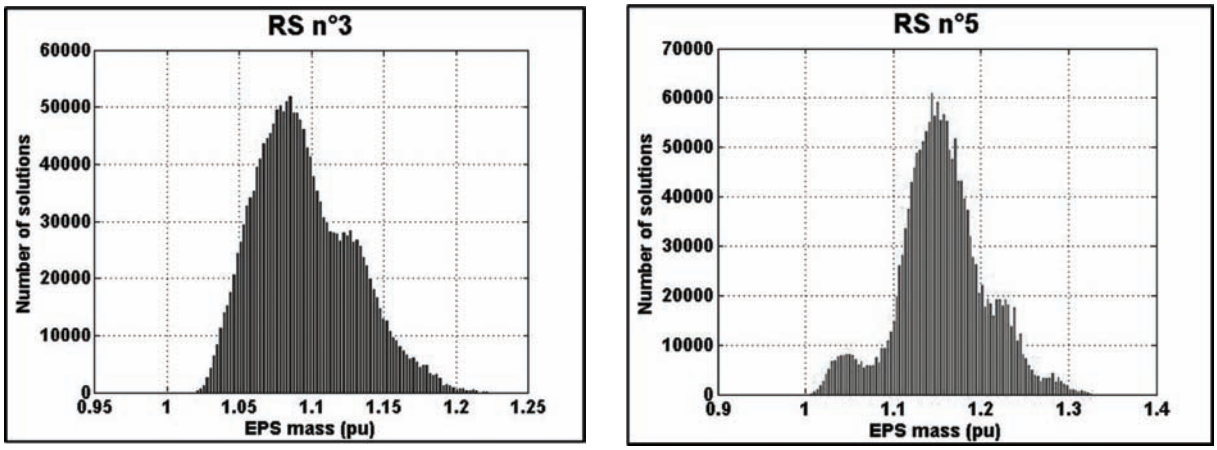

Fig. 7. Solution distribution for RS n°3 and RS n°5.

the different solution distributions show the multimodal aspect of EPS-LAP. The problem has several hundreds of solutions resulting in an EPS mass differing from less than 1% of the minimum EPS mass. Due to the highly multimodal aspect of the problem, all the optimization methods including MCS, find at least one solution whose performance differs from less than 1% of the optimum. In terms of mass, the EPS architect should be satisfied to find such load allocation. Nevertheless, it should be noted that GACP is always capable of finding several optimal solutions (Table 3). This capability is not observed for the other optimization methods. SA and SGA are able to capture one optimal solution during their optimization process whereas MCS does not find any optimal solution.

4.4. Optimization methods applied to the full size problem

The assessment is performed over 8 different RS. The efficiency of the four optimization methods is assessed by the best solution value and the mean value of 100 best solutions.

For all RS, GACP always provides the best results for both efficiency criteria. Thus GACP results are used as references for the assessment of other method efficiency. Table 4 shows that MCS is no longer capable of providing solutions differing from 1% of the best found solution. SA and SGA provide sets of solutions whose performance is at 1% of the GACP results. Nevertheless, SA can be seen as a more reliable method than SGA since SA does not converge prematurely. On average half of the SGA runs do not provide solutions of good performance due to a premature convergence. This SGA feature is illustrated in Fig. 8 where the SGA convergence is reached after 3500 evaluations whereas the optimum seeking with SA and GACP evolve until 5000 evaluations and 7000 evaluations. By observing distances

Table 4
Optimization method efficiency with respect to GACP results (pu)

RS	SA		SGA		MCS	
	Best solution value	Mean value of 100 best solutions	Best solution value	Mean value of 100 best solutions	Best solution value	Mean value of 100 best solutions
N°1	1.018	1.018	1.012	1.012	1.026	1.054
N°2	1.011	1.011	1.011	1.011	1.016	1.043
N°3	1.008	1.008	1.005	1.005	1.015	1.040
N°4	1.001	1.000	1.014	1.014	1.021	1.036
N°5	1.012	1.012	1.008	1.008	1.018	1.036
N°6	1.018	1.018	1.013	1.013	1.031	1.053
N°7	1.014	1.014	1.010	1.010	1.027	1.048
N°8	1.011	1.012	1.012	1.012	1.023	1.044
Mean	*1.012*	*1.012*	*1.011*	*1.011*	*1.022*	*1.044*

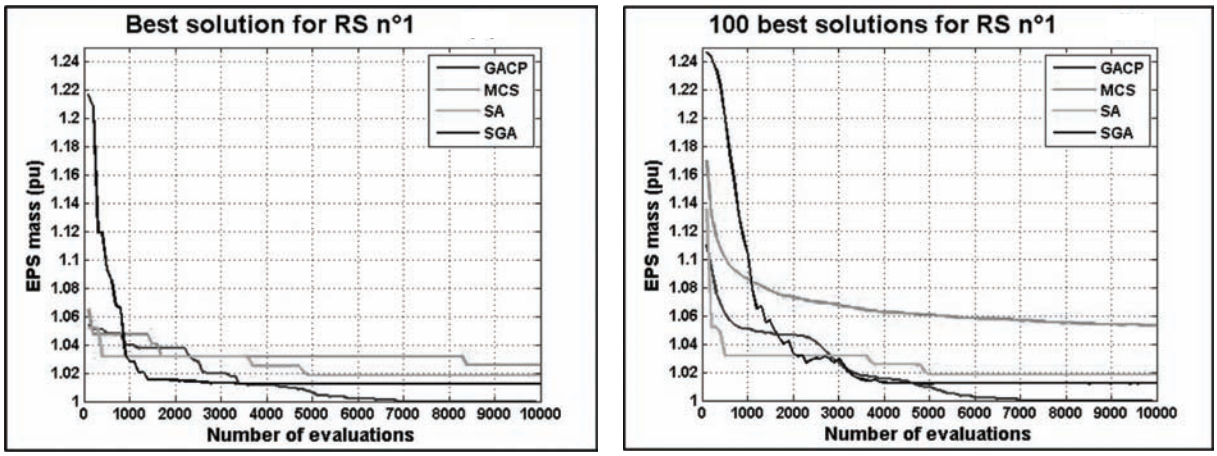

(a) (b)

Fig. 8. Evolution of the best solution value (a) and the mean value of the 100 solutions (b) for RS n°1 – best run plots.

between the solutions, it can be noted that GACP offers a large diversity of solutions. The final population of GACP is composed of different good solutions that have characteristics far from each other whereas the final population of SGA is composed of strictly similar solutions. SA offers a poor diversity since it is a local search method for which a single move is performed per algorithm iteration. Eventually, MCS offers a large diversity of solutions but solution performance is poor.

5. Conclusion

Aircraft Electrical Power System (EPS) is a major system in aircraft since it shall ensure the electrical supply of many systems including essential ones. The *More Electrical Aircraft* trend will emphasize this feature since it aims at installing new electric systems. As a result, the EPS design complexity will increase in the future. Within the EPS design process, Load Allocation Problem for aircraft Electrical Power System (EPS-LAP) consists in finding the optimal allocation of loads for minimizing EPS mass. EPS-LAP solving is a hard task and has a direct influence on EPS mass hence on aircraft mass. In the first part, the paper proposes a generic formulation that has been retained to model this practical problem. This leads to a particular type of problems that has not been treated so far and that could be entitled:

multi-scenario three-dimensional assignment problem. The comparison with other problems also shows that the use of exact methods is inefficient for large-scale problems. As a result, stochastic and meta-heuristic optimization methods have been selected and assessed on two problems of different form and complexity. The first one consisting in a reduced size problem is solved by a complete enumeration. It enables to identify the multimodal feature of EPS-LAP and optimal solutions. The Genetic Algorithm using the Clearing Procedure as a niching method (GACP) finds on average more than one half of the optimal solutions. On the full size problem considered as the actual industrial use case, GACP provides the best solutions. Furthermore, thanks to the niching mechanism, the GACP solutions have various characteristics far from each other. Solution diversity could be exploited by designers to carry on the EPS design process. Among the tested optimization methods, the best tradeoff between efficiency and solution diversity is provided by GACP.

The EPS-LAP generic formulation and the optimization method GACP presented in this paper constitute a complete methodology. By using this methodology on any form of EPS architecture, designers can obtain automatically, in less than one hour of computation, several good and diversified load allocations which may have been obtained after several days of work with conventional methods.

References

[1] X. Giraud, H. Piquet, M. Budinger, X. Roboam, M. Sartor and S. Vial, Knowledge-based system for aircraft electrical power system reconfiguration, *International Conference on Electrical Systems for Aircraft, Railway, Ship Propulsion* Bologna, Italy, (Oct 2012).

[2] M.K. Smail, L. Pichon, M. Olivas, F. Auzanneau and M. Lambert, Reconstruction of faulty wiring networks using reflectrometry response and genetic algorithms, *IJAEM* **35** (2011), 39–55.

[3] M. Todeschi, EMAs for flight control actuation systems – perspectives, *International Conference on Recent Advances in Aerospace Actuation Systems and Components*, Toulouse, France (5–7 May 2010), 1–8.

[4] S. Kirkpatrick, C.D. Gelatt and M.P. Vecchi, Optimization by simulated annealing, science, *New Series* **220** (1983), 671–680.

[5] J. Holland, Adaptation in natural and artificial systems, The University of Michigan Press, Ann Arbor, 1975.

[6] B. Sareni and L. Krähenbühl, Fitness sharing and niching methods revisited, *IEEE Trans on Evolutionary Computation* **2**(3) (1998), 97–106.

[7] K.C. Gilbert, R.B. Hofstra and R. Bisgrove, An algorithm for a class of three-dimensional assignment problems arising in scheduling operations, *Institue of Industrial Engineers Transactions* **19**(1) (1987), 29–33.

[8] F. Taniguchi, T. Yamada and S. Kataoka, Heuristic and reduction algorithms for the max-min optimization of the multi-scenario knapsack problem, *Computers and Operations Research* **35** (2008), 2034–2048.

[9] G. Yu, On the max-min 0-1 knapsack problem with robust optimization applications, *Operations Research* **44** (1996), 407–415.

[10] D.W. Pentico, Assignment problems: A golden anniversary survey, *European Journal of Operational Research* **176**(2) 774–793.

[11] E. Balas and M.J. Salzman, An algorithm for the three-index assignment problem, *Operational Research* **39** (1991), 150–161.

[12] D. Magos and P. Miliotis, An algorithm for the planar three-index assignment problem, *European Journal of Operational Research* **77** (1994), 141–153.

[13] Y. Crama and F.C.R Spieksma, Approximation algorithms for three-dimensional assignment problems with triangle inequalities, *European Journal of Operational Research* **60** (1992), 273–279.

[14] D. Magos, Tabu search for the planar three-index assignment problem, *Journal of Global Optimization* **77** (1994), 141–153.

[15] R.M. Aiex, M.G.C. Resende, P.M. Pardalos and G. Toraldo, GRASP with path relinking for the three-index assignment problem, Technical Report, *INFORMS Journal of Computing* **17**(2) (2005), 224–247.

[16] G. Huang and A. Lim, A hybrid genetic algorithm for the three-index assignment problem, *European Journal of Operational Research* **172** (2006), 249–257.

[17] M. Hasan, I. Osman and T. AlKhamis, A Meta-Heuristic procedure for the three dimension assignment problem, *International Journal of Applied Mathematics* **8**(4) (2002), 365–380.

[18] H. Kellerer, U. Pferschy and D. Pisinger, Knapasck problems, Springer, 2004.
[19] H. Iida, A note on the max-min 0–1 knapsack problem, *Journal of Combinatorial Optimization* **3** (1999), 89–94.
[20] X. Song, R. Lewis, J. Thompson and Y. Wu, An incomplete m-exchange algorithm for solving the large-scale multi-scenario knapsack problem, *Computers and Operations Research* **39** (2012), 1988–1200.
[21] A. Sbihi, A cooperative local search-based algorithm for the multiple-scenario max-min knapsack problem, *European Journal of Operational Research* **202** (2010), 339–346
[22] Matlab optimization toolbox (mathworks) – version matlab 7.11.0 (R2010b).
[23] J.H. Seo, S.Y. Kwak, T.K. Chung, S.Y. Jung and H.-K. Jung, Optimal design of interior-permanent magnet synchronous machine for vehicle using improved niching genetic algorithm, *IJAEM* **29**(1) (2009).