HAL
open science

Electrochemical crystallization for recovery of phosphorus and potassium from urine as K-struvite with a sacrificial magnesium anode

Jinhua Shan, Hongbo Liu, Shiping Long, Haodong Zhang, Eric Lichtfouse

To cite this version:

Jinhua Shan, Hongbo Liu, Shiping Long, Haodong Zhang, Eric Lichtfouse. Electrochemical crystallization for recovery of phosphorus and potassium from urine as K-struvite with a sacrificial magnesium anode. Environmental Chemistry Letters, 2022, 20, pp.27-33. 10.1007/s10311-021-01333-5 . hal-03503330

HAL Id: hal-03503330

https://hal.science/hal-03503330v1

Submitted on 27 Dec 2021

HAL is a multi-disciplinary open access archive for the deposit and dissemination of scientific research documents, whether they are published or not. The documents may come from teaching and research institutions in France or abroad, or from public or private research centers.

L'archive ouverte pluridisciplinaire **HAL**, est destinée au dépôt et à la diffusion de documents scientifiques de niveau recherche, publiés ou non, émanant des établissements d'enseignement et de recherche français ou étrangers, des laboratoires publics ou privés.

Environmental Chemistry Letters 2022
https://doi.org/10.1007/s10311-021-01333-5

Electrochemical crystallization for recovery of phosphorus and potassium from urine as K-struvite with a sacrificial magnesium anode

Jinhua Shan[1] · Hongbo Liu[1] · Shiping Long[2] · Haodong Zhang[1] · Eric Lichtfouse[3]

Abstract
Declining earth resources, rising ore cost and increasing pollution are calling for recycling of wastewater in the context of the circular economy. In particular, urine is a potential source of phosphorus (P) and potassium (K), yet currently available methods for P and K recovery are limited in efficiency. Here, we designed an electrochemical crystallization system using sacrificial magnesium anodes to recover P and K in the form of K-struvite ($MgKPO_4 \cdot 6H_2O$) from simulated urine at low (P/K = 0.25) and high (P/K = 0.6) phosphate levels, respectively. Results show optimal recoveries of 88.5% for P and 35.4% for K in the form of rod-shaped K-struvite at 3.5 mA/cm^2, though higher current density reduced recovery due to side reac-tions and pH increase. Seeding prefabricated struvite crystals at 1.6 g/L into urine enhanced the recovery of K by 14.7% and of P by 23.7% compared to the control group. Overall, our findings show that electrochemical crystallization is promising to recover K-struvite fertilizers.

Keywords Electrochemical crystallization · Sacrificial anode · Urine · Nutrient recovery · Struvite

Abbreviations

K	Potassium
P	Phosphorus
XRD	X-ray diffractometer
SEM	Scanning electron microscope
EDS	Energy-dispersive spectroscopy

Introduction

As the world's population continues to grow, the demand for food will increase by about one-third by 2050 (Fukase et al. 2020). Most commercial fertilizers containing ammonia bicarbonate, calcium phosphate, potassium chloride or potassium sulfate have been successfully prepared to improve soil fertility and promote crop growth (Pogorzelski et al. 2020; Lodi et al. 2021). Since the raw materials for conventional fertilizers come from ores, which are non-renewable, there has been widespread interest in developing new technologies to recover those nutrients from the environment as alternative fertilizers (Flores et al. 2017). Urine is rich in nutrients and is the source of more than 50% of phosphorus and 80% of potassium in municipal wastewater, even though it makes up only 1% of total wastewater volume (Yan et al. 2021). Therefore, extracting the elements from urine before entering municipal wastewater treatment plants would both lower treatment load of the plants and produce valuable fertilizers (Badeti et al. 2021). Although urine after storage for more than 6 months could be used in agricultural production, this technique is limited by large storage space, odor treatment during storage and high transportation costs (Udert et al. 2012), calling for the development of new technologies.

Currently, struvite precipitation (Rodrigues et al. 2019), ion exchange (Guan et al. 2020) and adsorption (Liu et al. 2021a) are common practices recovering nutrient elements from urine, with different characteristics in terms of water quality, chemical use, site and cost (Patel et al. 2020). Struvite precipitation

Jinhua Shan and Hongbo Liu contributed equally to this work

✉ Hongbo Liu
Liuhb@usst.edu.cn

1 School of Environment and Architecture, University of Shanghai for Science and Technology, 516 Jungong Road, Shanghai 200093, China

2 Chongqing New World Environment Detection Technology Co.LTD, 22 Jinyudadao, Chongqing 401122, China

3 Aix-Marseille Univ, CNRS, IRD, INRA, Coll France, CEREGE, 13100 Aix-en-Provence, France

is considered to be one of the promising directions because it can recover nitrogen and phosphorus in urine at the same time, and struvite is an excellent alternative fertilizer (Kumari et al. 2020). Traditional chemical methods for struvite precipitation require the addition of substances providing magnesium and alkalinity to the urine for obtaining struvite, which accounts for more than 70% of the total process cost (Hoevelmann et al. 2016). Researchers have investigated the use of magnesium-containing materials such as magnesium oxide (Luo et al. 2018), magnesite (Krähenbühl et al. 2016) and seawater (Merino-Jimenez et al. 2017) to reduce the cost; however, the source of magnesium and alkali still remains a major challenge.

Moreover, most studies have focused on the recovery of nitrogen and phosphorus from urine or wastewater, whereas there is little knowledge on the recovery of potassium. Few studies reveal that potassium and phosphorus could be recovered as magnesium potassium phosphate hexahydrate (Xu et al. 2011). Huang et al. recovered all phosphorus and 70.0% potassium from urine as K-struvite using low-grade MgO and phosphoric acid at an MgO/K/P molar ratio of 4:1:1.6 (Huang et al. 2019). Since the kinetics and thermodynamics of K-struvite precipitation are different from those of conventional struvite, some of the results of struvite precipitation studies are not fully applicable (Gao et al. 2018).

Simultaneous electrochemical treatment of wastewater and resource recovery is also of increasing interest due to its high efficiency, flexibility and absence of chemical addition (Crini et al. 2019; Liu et al. 2021b). For instance, electrochemical recovery of phosphorus using iron as sacrificial anode is about four times cheaper than the chemical crystallization method (Martin et al. 2020). Li et al. achieved 86.6–93.3% phosphorus recovery in the form of struvite by electrochemical decomposition of natural magnesite, providing both magnesium and alkali, with reduced costs by 60.0% compared to conventional chemical processes (Li et al. 2021). The practical application of electrochemical methods for simultaneous recovery of phosphorus and potassium from urine has not been reported yet. Therefore, we present here an electrochemical system for the simultaneous recovery of phosphorus and potassium from urine, in which magnesium metal is used as a sacrificial anode. The effect of current density on the effectiveness of recovering phosphorus and potassium at low (P/K = 0.25) and high (P/K = 0.6) phosphate levels, respectively, was investigated. Next, the composition of the products and their morphology were determined. Finally, the crystal seed feeding technique was applied to the K-struvite precipitation process.

Materials and methods

Simulated urine

The simulated urine composition is based on the composition of real urine where NH_4^+ was removed with modified composite clay (supplementary materials Fig S1). Preparation of composite clay is with reference to Sun et al. (2020). The formulation method and physicochemical characteristics of simulated urine are listed in supplementary materials Table S1 and Table S2, respectively. Chemicals were purchased from Sinopharm Chemical Reagent Co., Ltd., with analytically pure grade.

Electrochemical precipitation

The electrochemical system consists of an electrochemical reactor, a magnetic stirrer, a pH meter and a regulated DC power supply (Fig. 1). The electrochemical reactor is made of Plexiglas with dimensions of 10 × 10 × 10 cm. The anode is made of magnesium plate with 99% purity, from Huatai Metal Material Co., Ltd. (Taizhou, China); the cathode is made of 70-mesh universal steel wire mesh. The sizes of anode and cathode plates are both 7 × 7 × 0.2 cm. The two electrodes were placed parallel to each other in the simulated urine with an electrode

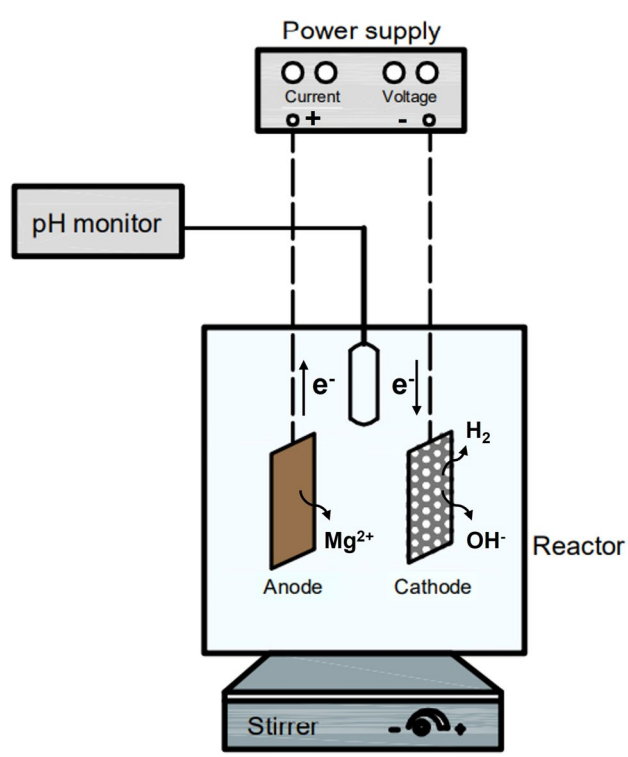

Fig. 1 The electrochemical crystallization system

distance of 3 cm and an effective contact area of 49 cm^2 with the urine. A Jingke pHS-3C pH meter, China, is located in the middle of the reactor to measure the pH change of the solution during electrolysis. The constant speed stirring was performed using a Junteng Jan-78 magnetic stirrer (Heze, China). Continuous current is provided by the Zhaoxin PS-3005D regulated DC power supply (Shenzhen, China). Anodic and cathodic reactions are given in Eqs. 1 and 2, respectively. K-struvite crystallizes and precipitates when the amount of Mg^{2+}, OH^-, K^+ and PO3- 4is sufficient (Eq. 3, n: 1, 2 or 3).

$$\text{Anode}: \mathrm{Mg} \rightarrow \mathrm{Mg}^{2+} + 2e^- \tag{1}$$

$$\text{Cathode}: \ 2\mathrm{H_2O} + 2e^- \rightarrow 2\mathrm{OH}^- + \mathrm{H_2} \uparrow \tag{2}$$

$$\mathrm{Mg}^{2+} + \mathrm{K}^+ + \mathrm{H}_n\mathrm{PO}_4^{3-n} + 6\mathrm{H_2O} \rightarrow \mathrm{MgKPO_4} \cdot 6\mathrm{H_2O} \downarrow + n\mathrm{H}^+. \tag{3}$$

The effect of current density on the recovery of electrochemical precipitation was investigated. The stirring speed was set at 300 rpm, and the reaction was carried out at current densities of 1.0, 1.5 and 2.0 mA/cm^2 for 130 min. 2.2 g $Na_2HPO_4{\cdot}12H_2O$ was added to the simulated urine to make a P/K ratio of 0.6:1, and experiments were carried out under the condition of phosphate supplementation to investigate the effect of current density on the effect of electrochemical crystallization on the recovery of phosphorus and potassium. The reactions were carried out at current densities of 1.0, 2.0, 2.5 and 5.0 mA/cm^2, and the reactor supernatant was taken at certain time intervals. The water samples taken were filtered through a 0.22-μm filter membrane, and the phosphorus and potassium contents were determined and the pH was recorded. The prefabricated K-struvite crystal seeds were prepared by molar ratio of Mg/K/P of 1:1:1.

Analysis

The phosphorus content was determined using a Shimadzu UV-2600 UV–Vis spectrophotometer, Japan, at a wavelength of 700 nm. Potassium ion concentration was determined using a PE Optima 8000 inductively coupled plasma emission spectrometer, USA. Crystal structure analysis of the precipitated products was performed using a Bruker D8 Advance X-ray diffractometer, Germany. The surface morphology of the crystals was observed using a Tescan Vega 3 scanning electron microscope, Switzerland, at 30 kV and a point resolution of 3.5 nm, and the elemental energy spectra of the product surfaces were obtained by point sweep analysis of the samples.

Results and discussion

P and K recovery from urine with different K/P ratios

We firstly tested the electrochemical recovery of P and K from simulated urine with K/P ratio of 1:0.25 (Fig. 2a–c). We observed the formation of a white precipitate at current density of 1.0 mA/cm^2 and 1.5 mA/cm^2 after 60 min, with a measured pH of 9.4. The recovery of phosphorus and potassium showed a significant increase after 60 min. Recovery decreased from 74.6% for P and 15.0% for K at 1.5 mA/cm^2 to 61.6% for P and 12.2% for K at 2.0 mA/cm^2 after 150 min of reaction. These rather low recoveries are explained by the low K/P ratio and low pH.

Then, we studied P and K recovery after dosage of 2.2 g $Na_2HPO_4{\cdot}12H_2O$ to increase the K/P ratio to 1:0.6. Results at various current intensities are shown in Fig. 2d, e. The time for white precipitate formation of $MgKPO_4{\cdot}6H_2O$ was decreased from 30 min at 1.0 mA/cm^2 to 10 min at 5.0 mA/cm^2. Higher current densities enhance OH^- release from the cathode of the electrochemical system and raise pH of the solution, thus favoring the precipitation process. Highest recoveries of 35.4% for K and 88.5% for P are observed at 3.5 mA/cm^2. The actual potassium recovery was lower than its theoretical value (obtained based on the phosphorus removal rate) at different current densities, indicating that the by-products consumed more phosphorus sources. Meanwhile, we observe a high increase of pH with current density, reaching 12.3 after 150 min at current density of 5.0 mA/cm^2 (Fig. 2f). The excess OH^- reacts with the Mg anode to precipitate $Mg(OH)_2$, which interferes with the formation of $MgKPO_4{\cdot}6H_2O$ (K-Struvite). This explains the decline of recoveries at high current density.

Characterization of the precipitate

The chemical composition and crystallinity of the precipitate at different current densities were analyzed by XRD (Fig. 3a, b). Comparison with the K-struvite standard reveals that the precipitate bears the typical peaks of K-struvite, e.g., at 15.97°, 20.60° and 33.93°. This confirms that the precipitate is made mainly of K-struvite ($MgKPO_4{\cdot}6H_2O$). The decreasing peak intensities at 5.0 mA/cm^2 indicate a lower purity and crystallinity of K-struvite. Overall, we found that higher current intensities decrease nutrients recovery, and K-struvite is the main compound of the precipitate.

The precipitate from the electrochemical treatment of simulated urine at 1.0 and 5.0 mA/cm^2 was analyzed by scanning electron microscopy (SEM). Under the 10-μm lens, the precipitate at 1.0 mA/cm^2 shows finer rod-like

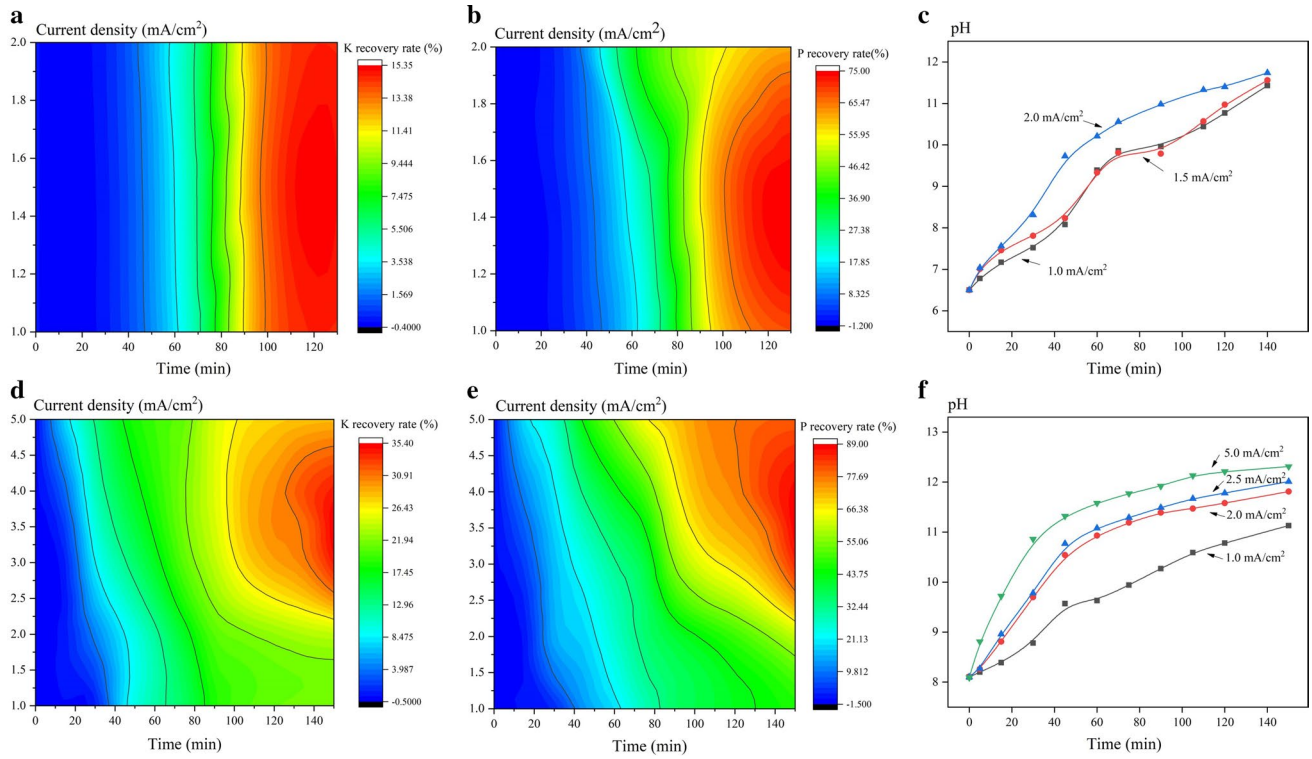

Fig. 2 Recovery of K (**a**), P (**b**) from simulated urine and pH variation (**c**) at P/K = 0.25; recovery of K (**d**), P (**e**) from simulated urine and pH variation (**f**) at P/K = 0.6, versus current density and time

crystals with few impurities attached to the crystals (Fig. 3c), which is consistent with the previously reported crystalline shape of K-struvite (Guan et al. 2021). By contrast, the rod-like product at 5.0 mA/cm^2 is longer and has more amorphous impurities on the surface (Fig. 3d). This is presumably due to the following side reactions and precipitation:

$$Mg^{2+} + Na^{+} + PO_4^{3-} + 6H_2O \rightarrow MgNaPO_4 \cdot 6H_2O \downarrow \quad (4)$$

$$3Ca^{2+} + 2PO_4^{3-} \rightarrow Ca_3\left(PO_4\right)_2 \downarrow . \quad (5)$$

EDS results of the precipitation indicate that the main elements are Mg, P, K, O, Na and Ca (Fig. 3e, f). This finding confirms that the main component of the precipitate is $MgKPO_4{\cdot}6H_2O$, accompanied by small amounts of $MgNaPO_4$ and $Ca_3(PO_4)_2$. We also observe that increasing the current density from 1.0 to 5.0 mA/cm^2 induces an increase of Na from 6.2 w% to 6.6 w% and Ca from 0.6 to 1.4%. This trend means that side reactions are favored at high current densities. Overall, the structure of K-struvite recovery from urine is confirmed with higher purity obtained at low current density.

Effect of seeding preformed crystals on recovery efficiency

We studied the effect of dosing prefabricated crystals of K-struvite at 0.8 g/L and 1.6 g/L in simulated urine on the recovery of P and K (Fig. 4). Results show an improvement of K recovery from 24.4 to 39.1% and P recovery from 60.6 to 84.2% at 1.6 g/L of dosed struvite, respectively. Both dosages of dosed struvite presented similar recoveries. The recovery curves of phosphorus and potassium have a greater slope during the first 60 min of the reaction when prefabricated crystals are injected, implying a faster crystallization rate. Enhanced recovery efficiency of the result is explained by prefabricated crystals that allow the direct growth of new struvite on the prefabricated crystals, thus bypassing the process of crystal nucleation in homogeneous solutions, in agreement with Hu et al. (2020). As the precipitate is generated during the reaction, the control of nucleation on the whole crystallization process gradually weakens, and the newly generated K-struvite can also be used as seeds to replace the initially added prefabricated K-struvite, which further increases the dosage of added struvite crystals but would not improve K and P recovery efficiencies. Overall,

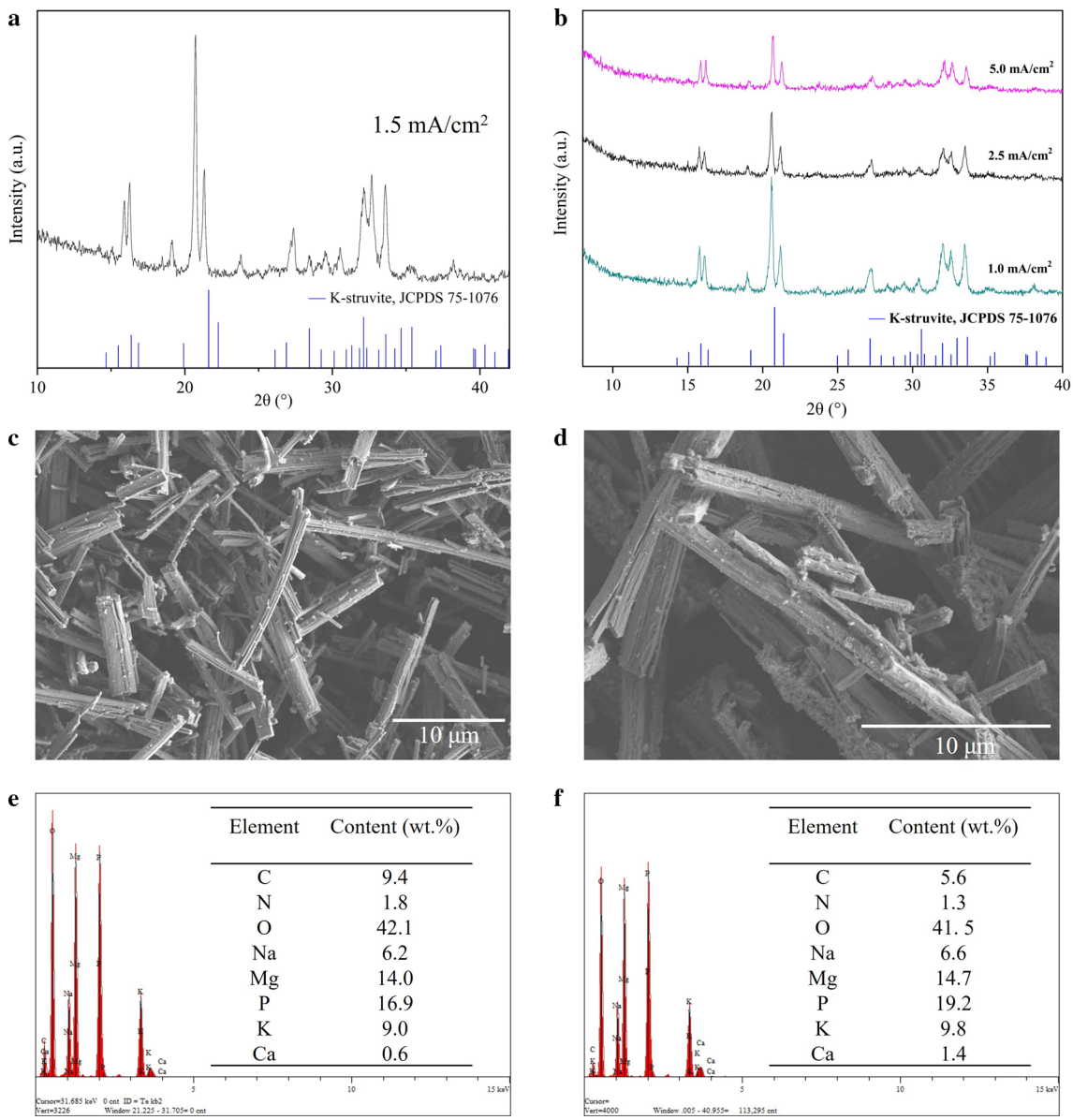

Fig. 3 X-Ray diffraction (XRD) analysis of the precipitate at P/K = 0.25 (**a**) and P/K = 0.6 (**b**). Scanning electron microscopy (SEM)–energy dispersive spectroscopy (EDS) of the precipitate in current densities of 1 mA/cm^2 (**c**, **e**) and 5 mA/cm^2 (**d**, **f**) at P/K = 0.6

dosing prefabricated crystals of K-struvite highly improves K and P recoveries from simulated urine.

Conclusion

A facile electrochemical crystallization method was constructed to recover phosphorus and potassium from simulated urine using sacrificial magnesium as anode. Mg^{2+} and OH^- were supplied at the anode and cathode, respectively, to spontaneously generate $MgKPO_4{\cdot}6H_2O$. 35.4% of potassium and 88.5% of phosphorus were recovered at an optimum current density of 3.5 mA/cm^2 and K/P of 1:0.6. The recovered products were characterized as mainly rod-shaped K-struvite and some impurities as $MgNaPO_4$ and $Ca_3(PO_4)_2$. Higher current densities resulted in lower product purity. Seeding was shown to enhance crystallization efficiency by eliminating the time of nucleation process, with 0.8 g/L K-struvite formation enhancing the recovery of phosphorus and potassium by 1.6 and 1.4 times, compared with the control group. Overall, this work provides a cost-effective method to recover phosphorus and potassium from urine, which is in line with the development of circular economy. It is of reference significance for the application of electrochemical technology.

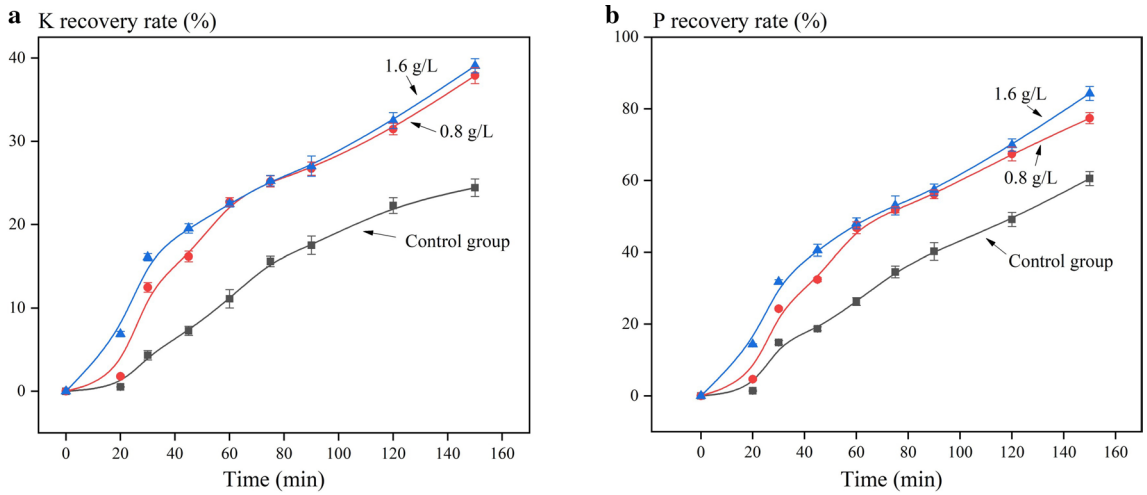

Fig. 4 Effect of dosing prefabricated K-struvite crystals at 0.8 and 1.6 g/L on the recovery of K (**a**) and P (**b**) during the electrochemical treatment of simulated urine

Supplementary Information The online version contains supplementary material available at https://doi.org/10.1007/s10311-021-01333-5.

Acknowledgements We gratefully acknowledge the co-funding of this work by the National Natural Science Foundation of China (No. 52070130) and the Shuguang Project of Shanghai (Education and Scientific Research Project of Shanghai, 18SG45).

Declarations

Conflict of interest The authors declare no conflict of interest.

References

Badeti U, Pathak NK, Volpin F, Dorji U, Freguia S, Shon HK, Phuntsho S (2021) Impact of source-separation of urine on effluent quality, energy consumption and greenhouse gas emissions of a decentralized wastewater treatment plant. Process Saf Environ Prot 150:298–304. https://doi.org/10.1016/j.psep.2021.04.022

Crini G, Lichtfouse E (2019) Advantages and disadvantages of techniques used for wastewater treatment. Environ Chem Lett 17(1):145–155. https://doi.org/10.1007/s10311-018-0785-9

Flores CG, Schneider H, Marcilio NR, Ferret L, Oliveira JCP (2017) Potassic zeolites from Brazilian coal ash for use as a fertilizer in agriculture. Waste Manage 70:263–271. https://doi.org/10.1016/j.wasman.2017.08.039

Fukase E, Martin W (2020) Economic growth, convergence, and world food demand and supply. World Dev 132:104954. https://doi.org/10.1016/j.worlddev.2020.104954

Gao Y, Liang B, Chen H, Yin P (2018) An experimental study on the recovery of potassium (K) and phosphorous (P) from synthetic urine by crystallization of magnesium potassium phosphate. Chem Eng J 337:19–29. https://doi.org/10.1016/j.cej.2017.12.077

Guan T, Kuang Y, Li X, Fang J, Fang W, Wu D (2020) The recovery of phosphorus from source-separated urine by repeatedly usable magnetic Fe_3O_4@ZrO_2 nanoparticles under acidic conditions. Environ Int 134:105322. https://doi.org/10.1016/j.envint.2019.105322

Guan Q, Zeng G, Song J, Li Y, Yang L, Wang Z, Liu C (2021) Highly efficient phosphorus and potassium recovery from urine via crystallization process in a fluidized bed reactor system. J Environ Chem Eng 9(4):105623. https://doi.org/10.1016/j.jece.2021.105623

Hoevelmann J, Putnis CV (2016) In situ nanoscale imaging of struvite formation during the dissolution of natural brucite: implications for phosphorus recovery from wastewaters. Environ Sci Technol 50(23):13032–13041. https://doi.org/10.1021/acs.est.6b04623

Hu L, Yu J, Luo H, Wang H, Xu P, Zhang Y (2020) Simultaneous recovery of ammonium, potassium and magnesium from produced water by struvite precipitation. Chem Eng J 382:123001. https://doi.org/10.1016/j.cej.2019.123001

Huang H, Li J, Li B, Zhang D, Zhao N, Tang S (2019) Comparison of different K-struvite crystallization processes for simultaneous potassium and phosphate recovery from source-separated urine. Sci Total Environ 651:787–795. https://doi.org/10.1016/j.scitotenv.2018.09.232

Krähenbühl M, Etter B, Udert KM (2016) Pretreated magnesite as a source of low-cost magnesium for producing struvite from urine in Nepal. Sci Total Environ 542:1155–1161. https://doi.org/10.1016/j.scitotenv.2015.08.060

Kumari S, Jose S, Tyagi M, Jagadevan S (2020) A holistic and sustainable approach for recovery of phosphorus via struvite crystallization from synthetic distillery wastewater. J Clean Prod 254:120037. https://doi.org/10.1016/j.jclepro.2020.120037

Li X, Zhao X, Zhou X, Yang B (2021) Phosphate recovery from aqueous solution via struvite crystallization based on electrochemical-decomposition of nature magnesite. J Clean Prod 292:126039. https://doi.org/10.1016/j.jclepro.2021.126039

Liu H, Shan J, Chen Z, Lichtfouse E (2021a) Efficient recovery of phosphate from simulated urine by Mg/Fe bimetallic oxide modified biochar as a potential resource. Sci Total Environ 784:147546. https://doi.org/10.1016/j.scitotenv.2021.147546

Liu Y, Deng Y-Y, Zhang Q, Liu H (2021b) Overview of recent developments of resource recovery from wastewater via electrochemistry-based technologies. Sci Total Environ 757:143901. https://doi.org/10.1016/j.scitotenv.2020.143901

Lodi LA, Klaic R, Ribeiro C, Farinas CS (2021) A green K-fertilizer using mechanical activation to improve the solubilization of a low-reactivity potassium mineral by *Aspergillus niger*. Bioresourc

Technol Rep 15:100711. https://doi.org/10.1016/j.biteb.2021.100711

Luo Y, Li H, Huang Y-R, Zhao T-L, Yao Q-Z, Fu S-Q, Zhou G-T (2018) Bacterial mineralization of struvite using MgO as magnesium source and its potential for nutrient recovery. Chem Eng J 351:195–202. https://doi.org/10.1016/j.cej.2018.06.106

Martin N, Ya V, Leewiboonsilp N, Choo K-H, Noophan P, Li C-W (2020) Electrochemical crystallization for phosphate recovery from an electronic industry wastewater effluent using sacrificial iron anodes. J Clean Prod 276:124234. https://doi.org/10.1016/j.jclepro.2020.124234

Merino-Jimenez I, Celorrio V, Fermin DJ, Greenman J, Ieropoulos I (2017) Enhanced MFC power production and struvite recovery by the addition of sea salts to urine. Water Res 109:46–53. https://doi.org/10.1016/j.watres.2016.11.017

Patel A, Mungray AA, Mungray AK (2020) Technologies for the recovery of nutrients, water and energy from human urine: a review. Chemosphere 259:127372. https://doi.org/10.1016/j.chemosphere.2020.127372

Pogorzelski D, Filho JFL, Matias PC, Santos WO, Vergütz L, Melo LCA (2020) Biochar as composite of phosphate fertilizer: characterization and agronomic effectiveness. Sci Total Environ 743:140604. https://doi.org/10.1016/j.scitotenv.2020.140604

Rodrigues DM, do Amaral FR, Carvalho AP, Hein T, Guerreiro de Brito A (2019) Recovery of phosphates as struvite from urine-diverting toilets: optimization of pH, Mg:PO_4 ratio and contact time to improve precipitation yield and crystal morphology. Water Sci Technol 80(7):1276–1286. https://doi.org/10.2166/wst.2019.371

Sun S, Ji G, Lv Y, Liu H, Hu T, Chen Z, Xu S (2020) Simultaneous recovery of ammonium and total phosphorus from toilet tail water by modified palygorskite-bentonite clay. Water Environ Res. https://doi.org/10.1002/wer.1495

Udert KM, Wächter M (2012) Complete nutrient recovery from source-separated urine by nitrification and distillation. Water Res 46(2):453–464. https://doi.org/10.1016/j.watres.2011.11.020

Xu K, Wang C, Liu H, Qian Y (2011) Simultaneous removal of phosphorus and potassium from synthetic urine through the precipitation of magnesium potassium phosphate hexahydrate. Chemosphere 84(2):207–212. https://doi.org/10.1016/j.chemosphere.2011.04.057

Yan Z, Cheng S, Zhang J, Saroj DP, Mang H-P, Han Y, Zhang L, Basandorj D, Zheng L, Li Z (2021) Precipitation in urine source separation systems: challenges for large-scale practical applications. Resour Conserv Recycl 169:105479. https://doi.org/10.1016/j.resconrec.2021.105479

Publisher's Note Springer Nature remains neutral with regard to jurisdictional claims in published maps and institutional affiliations.

Supplementary Data

Electrochemical crystallization for recovery of phosphorus and potassium from urine as K-struvite with sacrificial magnesium anode

Jinhua Shan[1a], Hongbo Liu[1*a], Shiping Long[b], Haodong Zhang[a], Eric Lichtfouse[c]

a School of Environment and Architecture, University of Shanghai for Science and Technology, 516 Jungong Road, 200093, Shanghai, China

b Chongqing New World Environment Detection Technology Co.LTD, 22 Jinyudadao, 401122, Chongqing, China

c Aix-Marseille Univ, CNRS, IRD, INRA, Coll France, CEREGE, 13100 Aix en Provence, France

Supplementary Table S1 Simulated urine formula for experiment.

Reagents	Formula	Content (g/L)
ammonium chloride	NH_4Cl	0.021
potassium dihydrogen phosphate	KH_2PO_4	0.179
disodium hydrogen phosphate dodecahydrate	$Na_2HPO_4 \cdot 12H_2O$	1.155
sodium chloride	NaCl	2.500
sodium sulphate	Na_2SO_4	0.980
potassium chloride	KCl	0.955
calcium chloride	$CaCl_2$	0.09
magnesium chloride hexahydrate	$MgCl_2 \cdot 6H_2O$	0.04

Supplementary Table S2 Characteristics of the simulated urine.

Characteristic	K^+	Total phosphorus (TP)	Na^+	Ca^{2+}
Content (mg/L)	551.2	140.8	1448.7	32.4

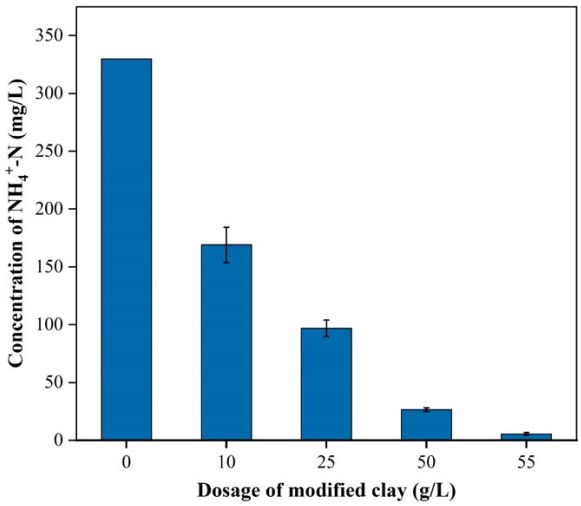

Fig S1 Removal of NH_4^+-N from urine using modified clay pretreatment.

* Corresponding author ADD: 516, Jungong Road, 200093, Shanghai, China;

Email: Liuhb@usst.edu.cn (H., Liu) Tel: +86(21)55275979; Fax: +86(21)55275979

1 1 Jinhua Shan and Hongbo Liu contribute equally to this work