HAL
open science

Liquid and Solid Precursor Delivery Systems in Gas Phase Processes

Constantin Vahlas, Brigitte Caussat, Wayne L. Gladfelter, François Senocq, Elisabeth Gladfelter

To cite this version:

Constantin Vahlas, Brigitte Caussat, Wayne L. Gladfelter, François Senocq, Elisabeth Gladfelter. Liquid and Solid Precursor Delivery Systems in Gas Phase Processes. Recent Patents on Materials Science, 2015, 8 (2), pp.91-108. 10.2174/1874464808666150324230711 . hal-03465025

HAL Id: hal-03465025

https://hal.science/hal-03465025

Submitted on 3 Dec 2021

HAL is a multi-disciplinary open access archive for the deposit and dissemination of scientific research documents, whether they are published or not. The documents may come from teaching and research institutions in France or abroad, or from public or private research centers.

L'archive ouverte pluridisciplinaire **HAL**, est destinée au dépôt et à la diffusion de documents scientifiques de niveau recherche, publiés ou non, émanant des établissements d'enseignement et de recherche français ou étrangers, des laboratoires publics ou privés.

Open Archive TOULOUSE Archive Ouverte (OATAO)
OATAO is an open access repository that collects the work of Toulouse researchers and makes it freely available over the web where possible.

This is an author-deposited version published in : http://oatao.univ-toulouse.fr/
Eprints ID : 14031

To link to this article : DOI: 10.2174/1874464808666150324230711
URL : http://dx.doi.org/10.2174/1874464808666150324230711

To cite this version :
Vahlas, Constantin and Caussat, Brigitte and Gladfelter, Wayne L. and Senocq, François and Gladfelter, Elisabeth *Liquid and Solid Precursor Delivery Systems in Gas Phase Processes.* (2015) Recent Patents on Materials Science, vol. 8 (n° 2). pp. 91-108. ISSN 1874-4648

Any correspondence concerning this service should be sent to the repository administrator: staff-oatao@listes-diff.inp-toulouse.fr

Liquid and Solid Precursor Delivery Systems in Gas Phase Processes

Constantin Vahlas[1*], Brigitte Caussat[2], Wayne L. Gladfelter[3], François Senocq[1] and Elizabeth J. Gladfelter[3]

[1]Centre Interuniversitaire de Recherche et d'Ingénierie des Matériaux (CIRIMAT) Université de Toulouse, ENSIACET, 4, Allée Emile Monso, BP-44362, 31030 Toulouse Cedex 4, France; [2]Laboratoire de Génie Chimique (LGC) Université de Toulouse, ENSIACET, 4, Allée Emile Monso, BP-44362, 31432 Toulouse Cedex 4, France; [3]Chemistry Department, University of Minnesota 207 Pleasant St., SE, Minneapolis, MN 55455, USA

Abstract: Due to attractive surface properties and to intrinsic brittleness of Complex Metallic Alloys (CMAs), most of their potential applications involve materials with high surface-to-volume ratios, including thin films and coatings. While physical vapor deposition techniques are efficient for the processing of CMA films on line-of-sight surfaces, chemical vapor deposition (CVD) is well positioned for their application on complex surfaces. However, for CVD process to be implemented efficiently in the processing of CMA films a number of challenges must be addressed. Because numerous CVD reagents, commonly called precursors, are low vapor pressure liquids or solids, one of these challenges is the production of vapors of such precursors, which are decomposed in the deposition chamber to provide the desired film. Such a production has to be ensured at high rate and must be reproducible and stable during the whole process. Actual solutions to this question involve (i) bubbling inert gas through thermally regulated liquid precursors, (ii) leaching the surface of fixed precursor powder beds, and (iii) *in situ* generating the precursor flow by passing a reactive gas through a thermally regulated bed of the metallic element to be transported. Such solutions neither may be satisfactory for actual R&D needs nor may be transferable to industrial environments. These reasons are in part responsible for the limited implementation of advanced materials (including CMA-based ones) in numerous industrial and hence societal needs. More recently, innovative solutions have been proposed to feed deposition systems based on vapor phase chemical techniques (CVD and Atomic Layer Deposition, ALD). Such solutions are Direct Liquid Injection (DLI) of dissolved solid precursors and also sublimation of the latter in fluidized beds or in elaborated fixed beds. Such technological responses show promise for industrial applications of CVD, especially for the deposition of metals and ceramic compounds for which the available molecular and inorganic precursors present low vapor pressures. This review provides an overview of the methods by which precursor vapors are transported to the deposition chamber. Early and recent patents dedicated to such technologies will be revisited and considered in the light of the deposition of multimetallic alloy coatings.

Keywords: CVD, chemical vapor deposition, CMA, coatings, complex metallic alloys, delivery system, fluidization, liquid precursor, solid precursor, sublimation, thin films, vaporization.

INTRODUCTION

Complex intermetallics, including Complex Metallic Alloys (CMAs) and quasicrystals, are a family of intermetallic compounds and phases which show excellent properties such as low adhesion (d-AlNiCo), catalysis (AlCuFeCr), hydrogen storage (TiCrV), and fretting (i-AlPdMn), friction (d-AlNiCo), oxidation (i-AlCuFeB) or wear (MgZnY) resistance (see [1] and references therein). For this reason, they can play a major role for the processing of innovative, advanced materials to face many societal challenges. Due to their brittleness in bulk form, however, there is a need for their processing as thin films and coatings.

*Address correspondence to this author at the Centre Interuniversitaire de Recherche et d'Ingénierie des Matériaux (CIRIMAT) Université de Toulouse, ENSIACET, 4, Allée Emile Monso, BP-44362, 31030 Toulouse Cedex 4, France; Tel: +33 534323430; Fax: +33 534323399;
E-mail: constantin.vahlas@ensiacet.fr

Chemical Vapor Deposition (CVD) has been extensively used for preparation of films and coatings in semiconductor wafer processing [2]. CVD is a favored deposition process in many respects in comparison with Physical Vapor Deposition (PVD) technologies, in particular because of its ability to provide highly conformal and high quality films, at relatively fast processing times [3]. A variant of CVD being explored to deposit highly conformal nanometric films is Atomic Layer Deposition (ALD). ALD involves sequential steps of deposition from two reactive precursors alternatively injected.

Despite such generic advantages, tuning of CVD and ALD processes requires overcoming numerous difficulties, corresponding either to the complex involved chemistry, or to engineering aspects of the process. Among the latter there is the precise control of gaseous reactive precursors introduced into the process chamber, to produce the desired layer

[4]. The cross linking of CMAs and CVD/ALD further increases these difficulties for the reliable and robust processing of CMA-containing films and coatings. Indeed the multi-element nature of these films requires compatible precursors in terms of physical, chemical and physicochemical properties, necessitating specific reactor design and optimized precursor delivery technology. When the precursors are low vapor pressure liquids or solids, which is often the case for CMAs, one of the difficulties is the production of vapors therefrom at high rate and in a reproducible and stable mode during the whole process [5].

Various liquid precursors are successfully used in CVD/ALD applications by delivering the precursor vapor in a carrier gas. A common method is to bubble a carrier gas through the liquid at a controlled temperature in order to saturate the gas phase with the vaporized precursor. Such a bubbler requires that the involved compound has sufficient volatility at the bubbling temperature to enable compatible (high) flow rate of precursor vapors to the process chamber for a commercially viable process. In the early nineties Hersee and Ballingal proposed the well-known engineering formula allowing evaluation of the upper limit of the produced flow of the precursor in a bubbler [6]. According to this formula, the precursor flow rate is proportional to the carrier gas flow rate through the precursor and to the saturated vapor pressure of the precursor at the bubbler temperature, and it is inversely proportional to the difference between the total pressure in the bubbler (considered being the same as the one in the process chamber) and the saturated vapor pressure of the precursor at the bubbler temperature. At the same period Middleman explored the complex interaction among the thermodynamic and transport characteristics of such a bubbler in a steady-state analytical model, also considering the conductance of the flow path downstream of the evaporator [7, 8]. He focused on the operation of the bubbler at very low pressures where bubbles evolution, either from vapor or dissolved inert gases, may give rise to the entrainment of liquid droplets within the vapor stream. He analyzed the dynamics of mass transfer in such a situation and estimated the length of a tubing over which a droplet will evaporate. Ten years after, Mayer *et al.* developed a complementary analytical model to represent the liquid-gas interactions in the carrier gas bubbles formed in the precursor liquid during the time period from when the bubble pulls free of the sparger tube, to when the bubble breaks the liquid surface [9]. More recently, Senocq improved Hersee's empirical model taking into account the bubbler efficiency [10, 11]. However, such mass transfer rate is difficult to control accurately [12]. Consequently, when different liquid precursors are vaporized, any uncontrolled variations in mass transport in the process streams may result in fluctuations in product stoichiometry.

Analogous attempts have been made to deliver vapors of solid powder reactants to a CVD reaction chamber using the sublimator/bubbler method. This procedure is often problematic because of the inability to deliver at a controlled rate a reproducible and stable flow of vaporized solid precursor [3]. Several factors including inefficient heat and mass transfer and the changing specific surface area of the powdered precursor decrease the efficiency of the sublimation process.

A common problem encountered in CVD/ALD processing of films and coatings is a low deposition rate resulting either from a low vapor pressure of the liquid or solid precursor, or from transport issues associated with such low vapor pressures [11]. This relation is straightforward when reactor operation is in the diffusion limited regime, where growth rate is proportional to the availability of reactants in the gas phase. However, it may even impact operation in the kinetically limited regime and in ALD, if the availability of the reactants in the gas phase is lower than their consumption on the surface (starved reaction regime). This may be the case for high volume ALD reactors operating at short ALD cycles.

The relation between the saturated vapor pressure and temperature for pure components is described by the Antoine equations [13]. A low saturated vapor pressure of the precursor may be a thermodynamic consequence of the solid(liquid) - gas equilibrium. It can also be a consequence of premature, partial or complete decomposition of the precursor in the vaporization system upon heating, thereby limiting the vaporization temperature.

The development of new vaporization technologies based on DLI sources sought to overcome problems of uniform precursor delivery by dispensing a solution of the solid precursor into the reactor. Ideally the solvent will evaporate quickly upon entering the vaporization chamber leaving the gas phase precursor to deposit the desired film on the substrate. An advantage of this approach results from the fact that the precursor is maintained at a lower temperature (where it is stable) until it reaches the vaporization chamber. While one remains limited by the equilibrium vapor pressure, this is now higher due to the higher temperature of the vaporization chamber. Problems can develop if supersaturation leads to formation of precursor particles. In addition, introducing a large quantity of solvent into the reactor can lead to film contamination and raises environmental concerns. Furthermore, several low cost and potentially interesting solid CVD precursors cannot be vaporized by DLI sources because it is not easy and sometimes even impossible to dissolve them in an organic solvent [5]

Due to these reasons, a significant effort has been produced to tackle the question of robust, reliable, and reproducible introduction of precursor vapors in process chambers. This effort resulted in a series of patents rather than research articles due to the technological and commercial interest of the elaborated solutions. The golden age of this activity is centered in the last two decades of the 20th century and is compatible with the increased needs of the microelectronics, glass and steel industries for functional films with controlled characteristics. The present article provides an overview of early and recent patents dedicated to the various ways liquid and solid precursors can be vaporized and transported to CVD/ALD chambers. The liquid precursor delivery systems will be presented first, followed by solid precursor ones. The patents are organized in groups of similar technologies. Although many of the patents describe clever approaches to addressing the precursor delivery problem, they focus on product design and often present little in the way of quantitative measures of performance. Despite this, we believe this review will be valuable to groups seeking ways to improve the speed and reliability of vapor deposition proc-

esses for a variety of applications. Finally, we comment that throughout the review the figures were extracted directly from the patents and often include numbers identifying parts of the design that are not explained in the figure caption. Those interested in the details will need to go to the cited patents for a complete explanation.

LIQUID DELIVERY SYSTEMS

To improve the efficiency of heat and mass transport within the precursor system, the invention by Soubeyrand and McCurdy [14] incorporates a set of mixing blades that rotate inside the vaporization chamber, in order to distribute the liquid precursor as a uniform thin liquid film upon the walls. The chamber is flushed by an inert carrier gas with the aim to increase the precursor mass transfer, and the precursor vapor/gas mixture is evacuated through an outlet to the deposition chamber which can be suitable for CVD deposition. The examples of applications provided by the inventors reveal that this method is particularly devoted to the CVD glass coating in the float glass process.

The patent by McMillan *et al.* [15] describes an apparatus for generating fine mist of a stabilized liquid source or a stabilized solution of desired chemical compounds using one or more rotating turbine blades within a chamber. The turbine blades are fixed to the end of a rotating shaft, and rotate between 750 and 1500 revolutions per minute (rpm) in order to accommodate to various liquids. A mixture of a liquid and a carrier gas are flowed into this chamber; it impacts the blades and the resulting mist is withdrawn under vacuum to the deposition chamber. This turbine mist generator is to a large extent insensitive to parameters such as temperature and viscosity of the liquid, dilution, rate of volume of mist generation, etc. According to the inventors, it can reliably generate homogeneous fine mist over a wide range of conditions without adjusting the operating parameters. Alternatively, they also propose an ultrasonic mist generator: A constant level tank containing an ultrasonic transducer at its bottom. A carrier gas is flowed over the liquid surface and the resulting mist is transported under vacuum to the deposition chamber. The inventors claim that this device is more sensitive to experimental conditions than the turbine generator; for example it needs to be operated with more dilute solutions. In the given examples, precursors are isopropoxides of titanium, zirconium and yttrium, and lead and manganese acetates, and the solvent can be 2-methoxyethanol.

The invention by Ott and Kodas [16] aims at preparing films of multicomponent metal oxides. An aerosol of liquid droplets having diameters from about 0.1μm to about 10.0μm, is formed from solution(s) of suitable solvent and at least two precursors capable of volatilization below their decomposition point. Among suitable precursor molecules are substituted metal diketonates, halides or acetates. The metals can be rare-earth metals, barium or copper. No indication is given on the way to produce the aerosol. This is mixed with a suitable oxygen containing carrier gas (preferably an inert gas plus 1 to 10wt% oxygen), and the mixture is carried to a heated zone having a sufficient temperature to evaporate the solvent and volatilize the precursors. The resulting vapors are transported to the surface of the substrate to be coated. The temperature of the substrate is said to allow decomposition of the volatilized precursor(s) and to lead to the deposition of metal oxide. According to the inventors, this process is suitable for the *in situ* preparation of high critical temperature, multicomponent, superconductive metal oxide films. These are prepared on selected substrates (silicon, magnesium oxide, sapphir); they are uniform in thickness and predominantly C-axis oriented.

The patent by Ewing describes the use of several liquid pumps and automated valves to feed a vaporizer with a continuous and steady volumetric flow at a predetermined pressure, substantially independent of downstream pressure [17]. The vaporizer uses a stack of thin disks heated above the vaporization temperature of the liquid, to flash vaporize the liquid. The system is optimized by the use of one-way valves. Despite its mechanical complexity, the inventor claims that such a system is relatively simple and inexpensive, and that it can be connected to the processing chamber with no or few vapor flow lines and no additional inert gases lines. No indication is given about the use of solutions or pure liquid compounds. Comparison is given only with bubbler systems or pressurized heated vessels, and not with other pumping systems such as rotating pumps. This device can be used in a CVD process, as well in any process needing continuous and steady flow of vapors.

The patent by Kaloyeros *et al.* describes a process involving the use of liquid-source bubbler systems for the delivery of solid source precursors to a deposition chamber [18]. A precursor solution reservoir at room temperature is maintained at a preset pressure through an inlet of inert gas. The reservoir is connected to an atomizer through a dipping pipe, a micro pump and control valves. No precise information on the vaporizer is given, except that "A liquid delivery system flash vaporizer such as that manufactured by MKS Instruments may be used in the system to provide accurate and reproducible liquid flows". Using $Cu^{II}(hfa)_2$, where HFA = hexafluoroacetylacetonate, as an example, the precursor is dissolved in a solvent such as methanol, ethanol or isopropanol. An inlet of hydrogen is connected to the vaporizer maintained at 100 $\pm$ 10°C. The vaporized liquid mixture containing the copper precursor is directed through a showerhead to a plasma enhanced CVD reactor. The inventors claim the production of high purity, continuous, reflective and mirror-bright copper films, of uniform thickness, with growth rates as high as 100nm/min. This example is convincing because it corresponds to operating conditions that seem appropriate to the liquid delivery system, and it includes precise operating conditions (solvents, temperature, and pressure) and film characterization (XRD, electrical resistivity). The device can be modified to selectively deliver multiple solutions to a single deposition chamber, in order to process films with more complex compositions such as Al-Cu, Cu-Au, or other binary, ternary or quaternary alloys/compounds including Y-Ba-Cu-O. This can be done by adding one or more sets of liquid delivery systems. Separate liquid delivery systems are claimed to enable selective control of the ratio of the metal in the film through their control valves, provided competitive phenomena in the gas phase and on the growing surfaces are considered and controlled.

Versteeg *et al.* invented a liquid delivery system which involves one or more ultrasonic atomizing nozzles to inject

liquid precursor solution(s) directly into a CVD reactor chamber [19]. The delivery system operates either in a continuous or pulsed mode. The inventors claim that atomization in the deposition chamber allows complete vaporization of the liquid precursor and uniform deposition of the films on the substrates, and that the pulsed mode ensures control of the film deposition rates as fine as monolayers per pulse. The inventors describe the use of the system for the deposition of titanium dioxide from titanium tetra-isopropoxide dissolved in toluene delivered in a pulsed mode.

The invention by Boer is the first to introduce mixing and vaporization chambers between the metrology facility for the establishment of liquid precursor flow rate and the deposition area [20]. Such chambers are nowadays part of many liquid injection technologies. According to this invention, the supply of the liquid precursor is ensured through a passage (a chamber) positioned between an inlet and an outlet ports. A carrier gas is also supplied in the chamber at the outlet of the liquid passage, where thorough mixing of the liquid and the carrier gas is obtained. A dimensional variation of the inlet and outlet ports (the former being wider that the latter) and of the mixing space facilitates the complete vaporization of the mist. This is obtained in a heated evaporation space where the mixture is directed to through a second outlet, under pressure. Figure **1** shows a detailed sketch of a device according to the invention.

The invention by Klinedinst and Lester aims at providing an uninterrupted constant velocity flow of liquid precursor to a liquid vaporizer, and subsequently, to provide a controlled rate of the vaporized precursor to the deposition chamber [21]. The device consists of a restrictor element through which passes a flow of a liquid precursor containing dissolved inert gas. The dissolved gas is released and separated from the liquid precursor in a conduit at the downstream side of the restrictor element. In this way, a continuous flow of liquid precursor is created which is fed into an inlet of a vaporizer. The vaporized precursor is delivered into a low pressure CVD reactor. The efficiency of the invention is illustrated by a series of tests which consist in determining the flow of tantalum (V) ethoxide, $[Ta(OEt)_5]_2$ versus the pressure drop across the flow restrictor and the subsequent Ta_2O_5 deposition rate versus the pressure drop applied across the flow restrictor. In both cases the evolution of the measured parameter is linear with the pressure drop.

The invention of Li and Scott involves a modular vaporizing apparatus which is fed by a liquid precursor or solution of one or more precursors in a liquid solvent [22]. Upon introduction in the vaporizer, the precursor is first atomized by an ultrasonic nozzle. Then the created mist is vaporized through direct contact with a heated surface. This surface is provided by removable porous media disks, which may be varied according to the desired operating pressure and precursors. The vaporization takes place in a chamber whose inner walls are protected by an unheated curtain gas that prevents the atomized mist from contacting the inner walls. This prevents vaporization of the mist prior to contact with the heated surface, and transports the mist to the heated contact surface. Figure **2** is a schematic representation of the vaporizer system. The vaporized precursor is then mixed with a carrier gas and forced into a CVD reaction chamber.

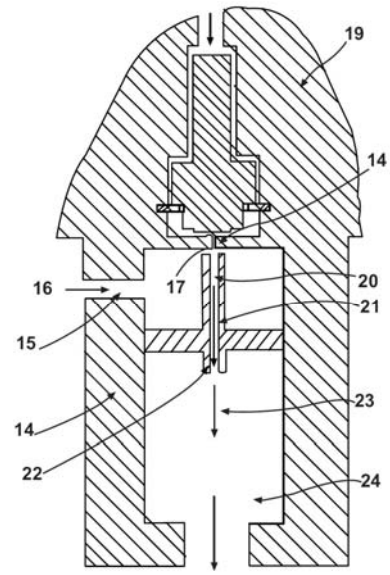

Fig. (1). Detailed sketch of a device according to the invention of Boer [20]. According to this sketch, the liquid precursor is fed in the device 19 from the upper part and the carrier gas 16 through a lateral opening 15. The carrier gas flows in the direction of the arrow to the mixing space 17 where it meets the liquid precursor immediately under the exit opening 14. The mixture then flows into the tubular shaped part 20 according to arrow 21 and is sprayed via the spray part 22 into the evaporation space 24. The arrow at the bottom points to the process chamber.

The basic idea of the invention by Senateur *et al*. involves the pulsed injection of liquid precursor or a solution into a reactor that has a mechanism (e.g. two zones) to first evaporate the solution and precursor and, second, to transport them into the high temperature reactor where deposition may occur on the heated substrate [23]. The patent describes different ways to vaporize the precursor including a heated surface that is located in a zone separated from the deposition area by a porous membrane such as steel wool. This minimizes the transport of unwanted particulates onto the substrate surface. As in other liquid delivery systems the precursor is stored at a temperature where it remains stable. Figure **3** [23] presents a detailed representation of an exemplary embodiment of such an injection system associated with a CVD chamber according to the invention.

Yu *et al.* note that in many liquid delivery systems the liquid contains a low vapor pressure precursor (solid or liquid) dissolved in a high vapor pressure solvent [24]. Upon pumping this solution into a heated vaporizer, the more volatile solvent is rapidly vaporized. If the remaining mass of the low volatility precursor is such that its equilibrium vapor pressure is exceeded, condensation can occur leading to difficulties in maintaining a uniform feed rate into the deposition chamber. The solution proposed in this invention involves adding an independent feed of pure solvent to the vaporizer to maintain a higher solvent partial pressure. The inventors provide evidence that this serves to reduce the formation of residues with the system. In the particular set of precursors studied, $Sr(dpm)_2$, where dpm = dipivaloylmethane, the solvent was isopropylamine. At the elevated temperatures reached in the vaporizer, it is possible

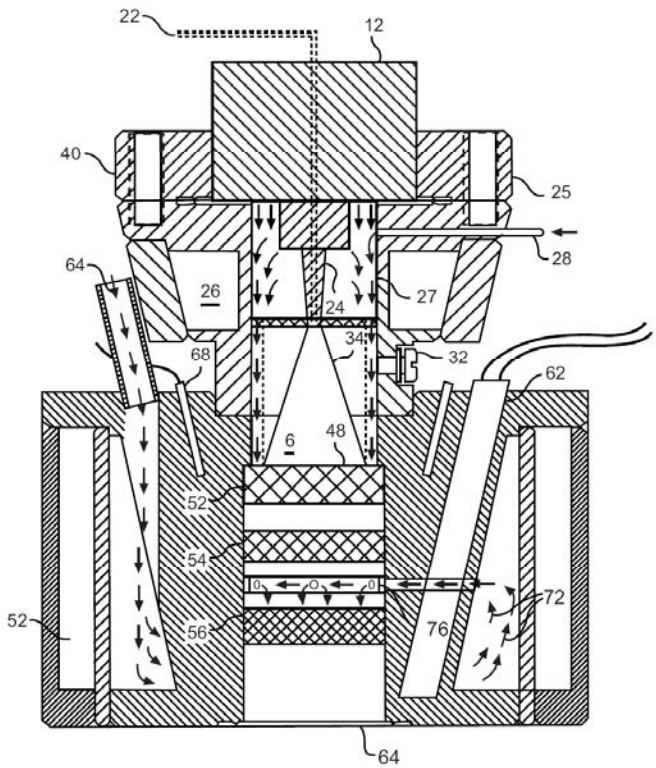

Fig. (2). Liquid vaporizer system (40) invented by Li and Scott [22]. It contains an ultrasonic nozzle 24 which receives liquid precursor from feed tube 22 mounted in an atomizer housing 12. A cooling jacket 26 surrounds the vaporizer apparatus segment for temperature control of nozzle 24. A curtain jack inlet port 28 is positioned adjacent the cooling jacket and creates a curtain of gas descending along the walls of the vaporizer as shown by the arrows. An expansion chamber 34 extends from the nozzle to the front face of a heated contact surface 48 in the form of a series of three porous disks 52, 54 and 56. The carrier gas heating chamber 72 surrounds the heating element 62 before passing into the contact surface where it mixes with the vaporized precursor.

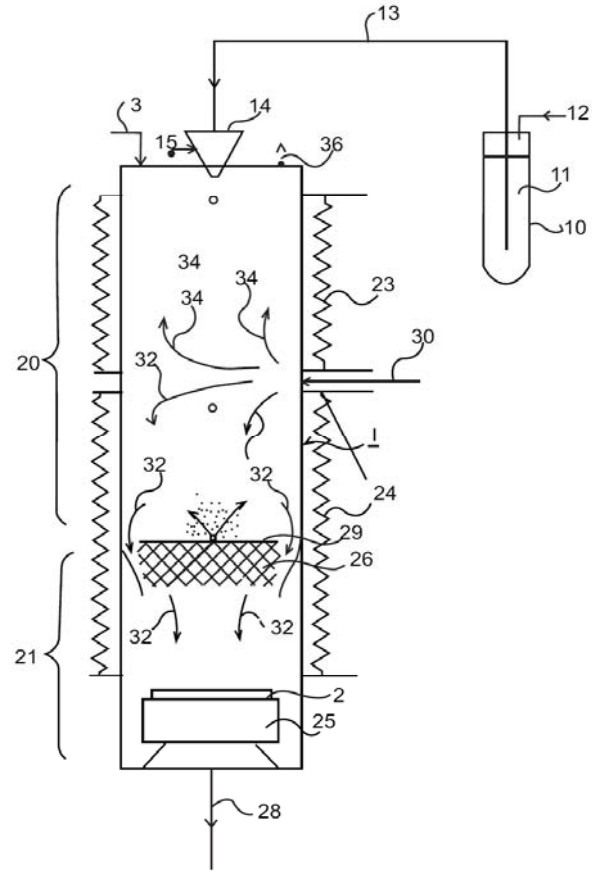

Fig. (3). Schematic illustration of the pulsed liquid injection facility, invented by Senateur *et al*. [23]. The deposition chamber 1 is partitioned in two areas, 20 (the evaporator) and 21 (the reactor). Heating means maintain a selected temperature gradient in the chamber, for example the evaporator at 60°C and the reactor at 300°C. The substrate 2 is placed on a heating support 25. In the figure, separation of 20 and 21 is ensured by a porous medium, e.g. steel wool, which ensures better distribution of the gas and a slight pressure gradient between the two areas. The lower portion of the reactor is connected to a pumping pipe 28 combined with a valve with controlled flow designed to maintain a selected pressure in the reactor. A carrier gas, which may participate to the reaction, is also introduced into chamber 1 and especially conveys the injected precursors to the substrate. In addition, the lower portion of the evaporation area comprises a plate 29 on which the droplets projected by the injector crash and very rapidly evaporate.

that the solvent may also react with the precursor, which may also serve to reduce the formation of residue.

The patent by Loan and Salerno describes a delivery system that can be used with either solid or liquid precursors although the former requires minor changes to the design shown in Fig. (**4**) [25]. A primary goal of this design is to avoid the use of a carrier gas and to use mass flow controllers coupled with pressure measurement by capacitance manometers to deliver a uniform precursor flux to the reactor. The liquid precursor is loaded into chamber 20 (see Fig. (**4**), which is thermally insulated from the high temperature vaporization chamber [26]. As needed, precursor is dispensed through valve 24 onto the conical, heated surface [27, 28]. The precursor vapor is then pulled through port 32 into a gas-flow control subsystem that delivers a controlled, uniform flow into the reactor

By generating an aerosol of charged droplets of a precursor solution, Solayappan *et al*. designed a delivery system in which the charged droplets can be size selected and accelerated to the substrate [26]. During operation the liquid precursor solution is pumped at a uniform rate through a venturi to create the aerosol. The aerosol droplets then flow past a corona wire in an atmosphere of an inert gas and oxygen, which induces a charge on the droplets. Size selection is accomplished using a particle inertial separator. Particles of uniform size provide better control of their velocities as they travel to the substrate. The negatively charged particles are accelerated towards a positively charged perforated plate to allow a portion of the particles to pass through to the substrate. Ideally, the charged plate is slightly larger than the substrate to allow uniform coverage over the entire surface. The substrate itself is grounded to minimize the effect of charge buildup.

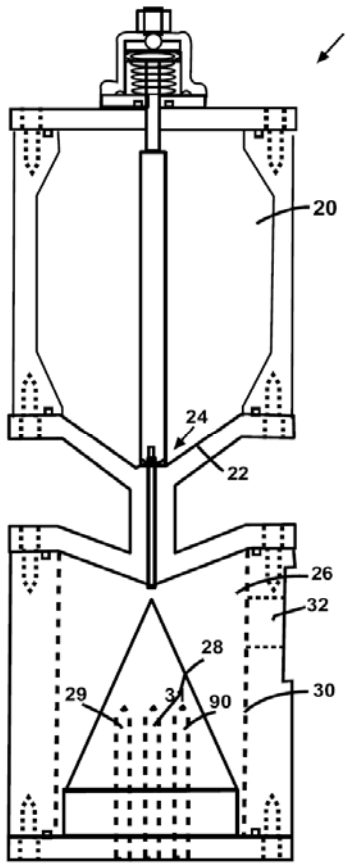

Fig. (4). Cross sectional illustration of a vaporization subsystem of the invention by Loan and Salerno [25].

The invention of Fang and Hillman focuses on a CVD apparatus rather than on a precursor delivery system and concerns deposition of copper [27]. It involves an ultrasonic nebulizer, positioned directly at the cover of the deposition chamber, upon a substrate holder. The nebulizer atomizes the liquid precursor and applies it onto a substrate supported by the substrate holder. The invention also involves a gas distribution ring disposed in the CVD chamber between the substrate holder and the nebulizer. This ring discharges a directionally oriented, heated, "swiping gas" into the atomized precursor with the purpose assisting in the evaporation of the precursor droplets and directing them toward the substrate. This gas should have a high heat capacity and low molecular weight allowing for high binary diffusivity, which generally reduces evaporation time. To further ensure that the entire atomized precursor vaporizes before reaching the wafer, a vaporization zone, a vaporizer plate or a diffuser, may be provided around the ultrasonic nebulizer. According to the inventors, this setup avoids the drawback of temperature decrease of the atomized precursor met in traditional atomizers which are based on an adiabatic expansion through the use of a carrier gas pressure differential in the vaporization process.

The invention of Paz de Araujo *et al*. involves flowing various liquid precursors through liquid flow controllers to a mister/gasification system [12]. This system is formed of venturi mist generators, one for each incoming liquid flow stream. Each venturi mist generator has a liquid inlet, a carrier gas inlet and a mist outlet. Mist generators create a mist of small liquid droplets of liquid precursors in the carrier gas. If multiple liquid precursors are being atomized, then each venturi mister produces a mass flow rate of liquid equal to the liquid mass flow rate in the liquid inlet stream in order to control the overall stoichiometry. The mist streams containing the nebulized liquid precursors combine in a mist mixer containing baffles or other means to enhance mixing. The combined stream flows to a vaporizer to gasify the droplets at low temperature to avoid decomposition of the precursors. The gasified precursor stream flows to deposition reactor. If other than liquid vapor sources are used, they are combined after the gasifier to the gasified precursor stream. The mister/gasification system preferentially operates at atmospheric pressure. The CVD processes being preferably conducted at low pressure, at least two step-down stage valves are placed after the gasifier. Figure **5** presents a schematic view according to a preferred embodiment of the invention.

The invention of Brutti *et al*. concerns an apparatus for delivery of liquid precursor or precursors in solution into a CVD reactor [28] The equipment is composed of an inlet head connected to an evaporation chamber, which is itself connected to a CVD chamber. The inlet head is equipped with at least one injector connected to an external tank filled with liquid precursor or precursor in solution. Each injector periodically sends predetermined quantities of droplets into the evaporation chamber in which the liquid/vapor state change takes place. The injector is formed by a solenoid valve, which allows accurate reproducible control of the volume injected. The injector can also be replaced by a spray nozzle delivering a continuous or pulsed aerosol flow of precursor. In this case, a liquid regulating flow meter is fitted between the tank and the nozzle. The evaporation chamber is designed with internal channels and porous sintered glass plates to reduce the size of droplets and increase the heated surface with the aim to vaporize all the liquid before the outlet. To prevent any condensation of the evaporated products on cold zones of the evaporation chamber, a carrier gas is injected into the chamber simultaneously with the liquid injection to enable optimum evaporation and efficient transportation of the vapors of precursor to the CVD reactor. Figure **6** presents a longitudinal sectional view of the evaporator apparatus according to this invention, which is equipped with two injectors.

The invention of Hillman *et al*. concerns a precursor vapor delivery system including a diffuser preferably conical in shape, whose larger bottom open end communicates with an opening at the top of a CVD reactor, possibly by a shower head [29]. The diffuser has a smaller top upper part to which is connected a high conductance vaporizer. The vaporizer has a precursor temperature control including an isothermal heat source and a temperature control to vaporize liquid precursor droplets. The top of the vaporizer is connected to an atomizer through which droplets are delivered to the vaporizer. A source of liquid precursor is connected through a liquid delivery line to a flow control device at the top of the atomizer. A source of inert sweep gas such as argon is connected to an inlet port of the atomizer. The sweep gas is

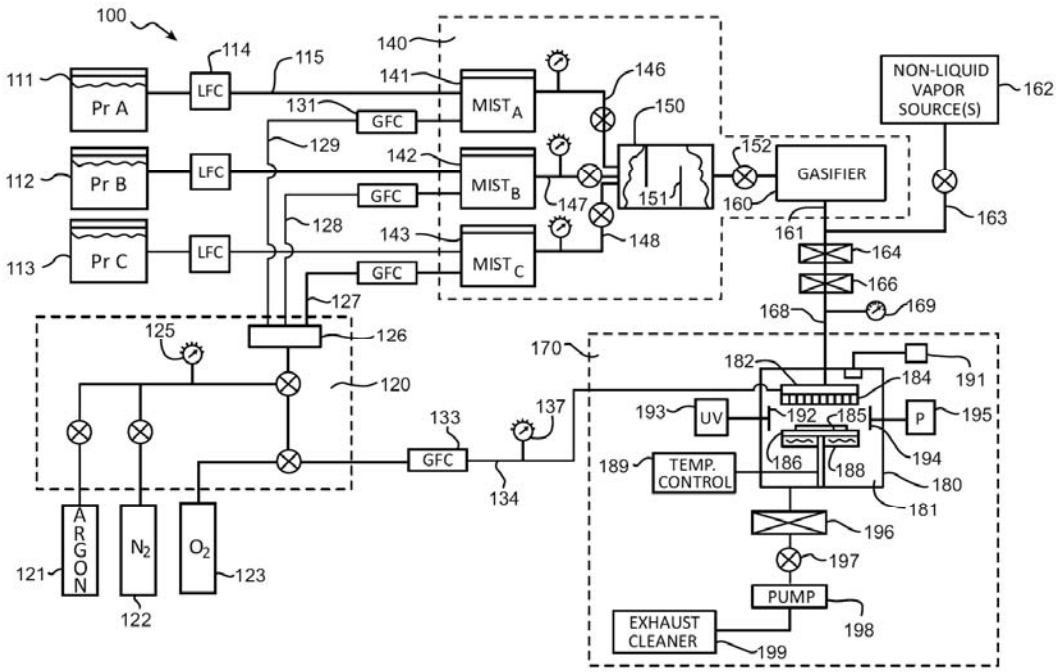

Fig. (5). Preferred embodiment of the CVD apparatus 100 according to the invention by Paz de Araujo *et al*. [12] It illustrates the plurality of liquid precursor sources 111-113, and indicated by dashed lines, a gas manifold system 120, a mister/gasification system 140, and a deposition reactor system 170.

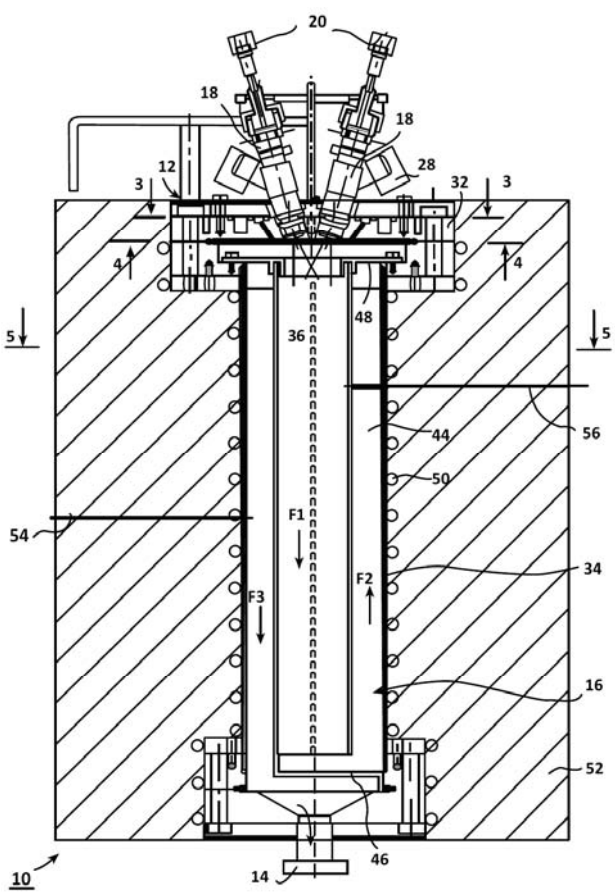

Fig. (6). Longitudinal sectional view of the evaporator apparatus 10 for liquid delivery of reactants into a CVD chamber, according to the invention by Brutti *et al*. [28] It comprises an inlet head 12 connected to an outlet tube 14 via an evaporation chamber 16. The inlet head is equipped in this illustration with two injectors 18 having an inlet 20 connected to an external tank filled with liquid precursors or precursors in solution. Each injector 18 periodically sends predetermined quantities of liquid into the evaporation chamber 16, in which the liquid/vapor state change takes place.

introduced at a temperature between 60 and 90°C. The atomizer is provided with an exhaust port, which can be connected to a vacuum pump to allow the flow of sweep gas to bypass the CVD chamber during transient operations. The vaporizer can be formed of a series of concentric cylinders of progressively increasing diameters so that the cross-sectional area of passage into the reaction chamber increases along the flow path, in order to increase the amount of vaporized droplets; i.e. the conductance of the vaporizer. The novelty of this system is the presence of a vaporizer in integral communication with the CVD reactor, the vaporizer having a high flow conductance path of progressively increasing volume for atomized precursor to the CVD chamber.

The invention of Sun and Liu is based on the transformation of the liquid precursor or precursor solution into an aerosol composed of small and larger liquid droplets [30]. The aerosol generator operates at room temperature to avoid thermal degradation of the precursor. According to this invention, a compressed carrier gas enters a passageway having an orifice or nozzle at the inner end to form a jet that aspirates the liquid precursor arriving by another passageway. The liquid is broken into droplets to form a high velocity aerosol stream. This stream, in the form of a spray moves into a vaporizer having heated interior walls so that the carrier gas is heated rapidly in order to “flash vaporize” droplets of the aerosol. By this way, very few aerosol droplets directly contact the interior wall surfaces to minimize the precursor decomposition and crust formation and clogging. The

resultant gas/vapor mixture is finally introduced into a downstream CVD reactor by passing through a restriction causing turbulent mixing of the gas/vapor mixture and a heated gas filter to collect any particulate contaminant. The carrier gas and the liquid precursor can also be introduced into an ultrasonic aerosol generator that provides vibrational energy at high frequency to break up the liquid into droplets. The vaporizer is capable of providing a stable source of vapor of uniform composition at high vaporization rate to the CVD reactor to obtain uniform coatings.

The invention by Westmoreland and Sandhu deals with the management of a nonvolatile CVD precursor through the dissolution in a solvent of moderate to high vapor pressure at room temperature [31]. In contrast to commonly admitted organic solvents, inorganic ones are used here, in order to avoid large carbon residue when processing temperature is high. These can be liquid ammonia, liquid NO_2, SO_2, $TiCl_4$, SF_6, or SiH_2Cl_2, depending on the materials to be deposited, on the involved chemistry and on the processing conditions. Also, instead of involving a vaporization chamber, the solution is transported at an elevated pressure and/or reduced temperature directly to the CVD chamber. The solution can be either evaporated upon introduction in the processing chamber or, in contrast it can be in contact with the heated substrate (wafer). The expected result in the latter case is the vaporization of the solvent and the formation of the targeted thin film. Typical precursors mentioned for the processing of such films are bis(cyclopentadienyl)titanium dichloride, cyclopentadienyltris(diethylamido)titanium, zirconium tetrachloride, indenyltris(dimethylamido)zirconium or tungsten carbonyl.

The invention of Liu *et al*. concerns an apparatus forming an aerosol from a liquid source for vaporization and subsequent thin film deposition on a substrate [32]. A piezoelectric actuator allows adjusting the rate of the liquid flow from the liquid source. A compressed gas source containing a carrier gas is used for atomizing the liquid. When the gas source conjoins with the liquid, an aerosol is formed in a heated vaporization chamber. The resulting gas/vapor mixture then flows out of the vaporization chamber into a deposition chamber. The atomizing system consists of a small metal capillary tube through which the liquid flows and the gas source flow is organized outside the tube to form a high velocity gas jet (between 30 and 350m/s) at the exit of the capillary tube forming a spray of fine droplets in the heated vaporization chamber. As is the case for other inventions, solid precursors having a high vaporization temperature (in the present case the inventors mention 350°C) must be dissolved into a solvent and then atomized to form droplets to vaporize both the solvent and the precursor.

The invention of Marsh and Atwell relates to a vaporizer including a liquid precursor injector and a heater that is connected to a reaction chamber [33]. Precursor storage, solvent storage and optional carrier gas storage are connected by supply lines and inlet valves respectively to the injector, to a solvent port and to a carrier gas port of the vaporizer. The system can include a flow sensor in the precursor supply line and/or a precursor concentration sensor at the vaporizer or at the reaction chamber. A schematic diagram of the system during normal operation, in accordance with an embodiment of the disclosure is presented in Fig. (**7**). It is worth noting that to start a maintenance procedure, the controller can stop

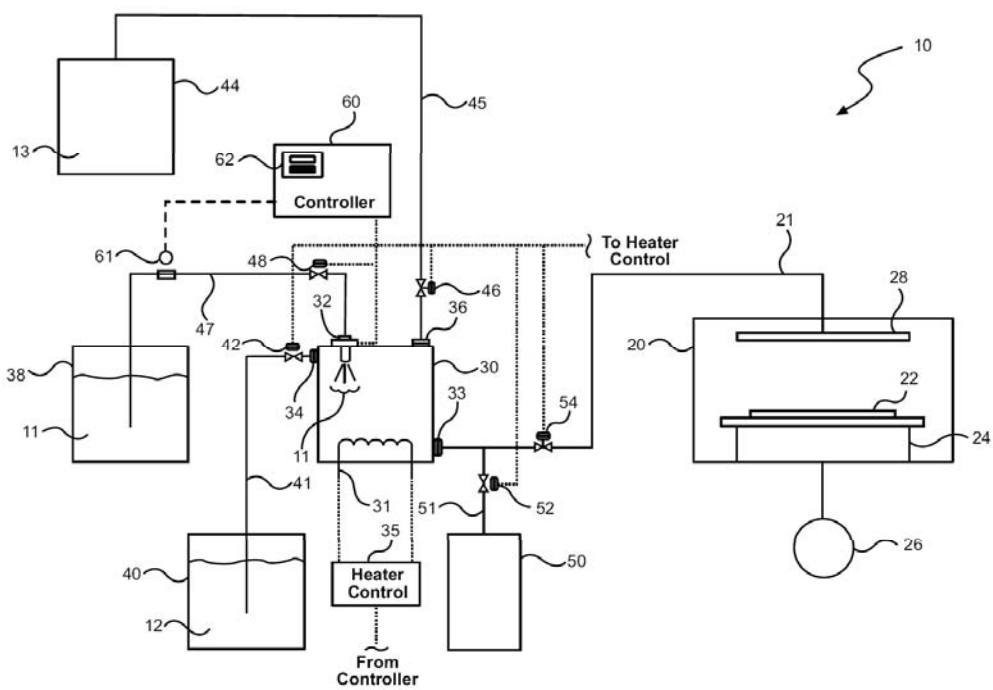

Fig. (7). Chemical vaporizer for material deposition systems by Matsh and Atwell [33]. Schematic diagram of the system during normal operation, in accordance with an embodiment of the disclosure. The system 10 includes a reaction chamber 20 and a vaporizer 30 for vaporizing precursor 11. 20 and 30 are connected by a delivery line 21. The latter contains an inlet valve 54 to regulate precursor flow to 20. The vaporizer includes a heater 31 and a heater control 35. The diagram illustrates the precursor (38), the solvent (40), the carrier gas (44) and the waste (50) storages.

all material flow into the vaporizer, command the heater to reach a maintenance temperature and open the solvent inlet valve to remove the residue from the injector and vaporizer. By tuning this procedure, the authors discovered that vaporized solvent better removes residue from the injector than liquid solvent. It is believed that this is due to the existence of solvent reflux (i.e. evaporation/condensation cycles) in the vaporizer. This cleaning process is cost-effective because the injector can be efficiently cleaned without removing it from the vaporizer. It is worth noting that servicing of injector technology may be frequent, necessary and significant due to undesirable reactions or phase transitions in the vaporization chamber, which often affects process reproducibility and reliability.

SOLID DELIVERY SYSTEMS

Shenai-Khatkhate points out the problems of delivering steady feed of precursor vapors to the processing chamber. The unsteady precursor flow rate is attributed, among other factors, to the progressive reduction of the exchange surface of the precursor, inefficient and non-uniform carrier gas flow through the precursor bed and channeling through it, leading to preferential flows and reduced contact of the carrier gas and precursor [34]. To circumvent this problem, the inventor proposes a setup which looks equivalent to a conventional bubbler for the vaporization of liquid precursors, but presents significant differences. A cross sectional illustration of such a delivery device is presented in Fig. (**8**). The invention involves a downstream flow of carrier gas through a layer of packing material (0.25mm to 1mm particle size) displayed over the precursor bed, the exhaust outlet of the precursor plus carrier gas flow being at the bottom of the precursor bed. The author claims a reduced formation of channel formation in the precursor bed, and a consistent and stable concentration of precursor in the vapor phase without the need to overheat it.

The invention described in another patent of Shenai-Khatkhate *et al*. involves modification of the interior of a traditional precursor vessel such that two chambers are present within the vessel [35]. One chamber contains solid precursor along with a layer of packing material. In most embodiments the packing material is located on top of the precursor layer, and the carrier gas flows first through the packing layer then through the precursor layer. The packing layer may be inert beads or other shapes of various diameters. An unusual component of the invention is the conversion of the particulate precursor into a porous frit. This is accomplished by heating the precursor to the point where adjacent particles fuse to one another, at most 5°C below its decomposition temperature. The porous frit creates a tortuous path for the carrier gas that can assist in saturating the gas with precursor vapor. The precursor chamber is separated from the collection chamber by an inert porous element. In a separate embodiment of this design the composition of the packing layer may be modified to include a material that removes water and/or oxygen from the carrier gas, thus improving the stability of the precursor. The packing layer can be separated from the precursor layer as described above or mixed with the precursor layer.

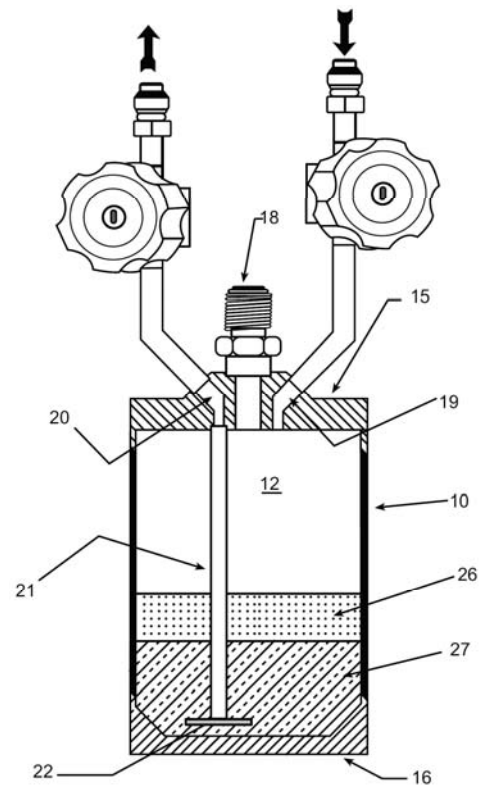

Fig. (8). Cross sectional view illustrative of a delivery device patented by Shenai-Khatkhate [34]. It presents a dip-tube 21 connected to the gas outlet and having a porous frit 22 disposed at its lower end. The solid precursor 27 is stacked at the bottom of the cylinder with a packing material 26 disposed thereon. The carrier gas enters the container, is being saturated with the precursor vapors and exits the container through the gas outlet opening 20.

Suzuki *et al*. invented a method for preparing a solid precursor for use in an adapted evaporation system [36]. The method consists in sintering or stamping the precursor powder to form solid tablets. The tablets are placed in a solid precursor evaporation container, which is composed of a number of horizontally positioned annular trays with an axial opening. Their diameter can be as high as 99 % of the inner one of the container, with typical dimensions being 20cm diameter, 2cm inter-tray spacing. Precursor vapors are produced by heating the evaporation system while flowing a carrier gas radially, at different heights, from the inner walls of the container towards the center of the container over the trays and then axially upwards through the central opening which is connected with the film process chamber via high conductance tubing. Typical examples concern metal deposition from solid metal carbonyl compounds.

The invention of Chaubey and Xu [37] is comparable with the one by Suzuki *et al.* [36]. It is schematically presented in Fig. (**9**), and involves a cylindrical container filled with alternating disks or shelves filled with the solid precursor to be sublimed. The carrier gas is introduced in a vertical dip tube, which extends down to the bottom of the container. Disks and shelves form inner and outer passages, as well as spaces between the disks. The carrier gas moves radially through these passages and spaces. The heated container and the tortuous fluid flow path above the surface of the precur-

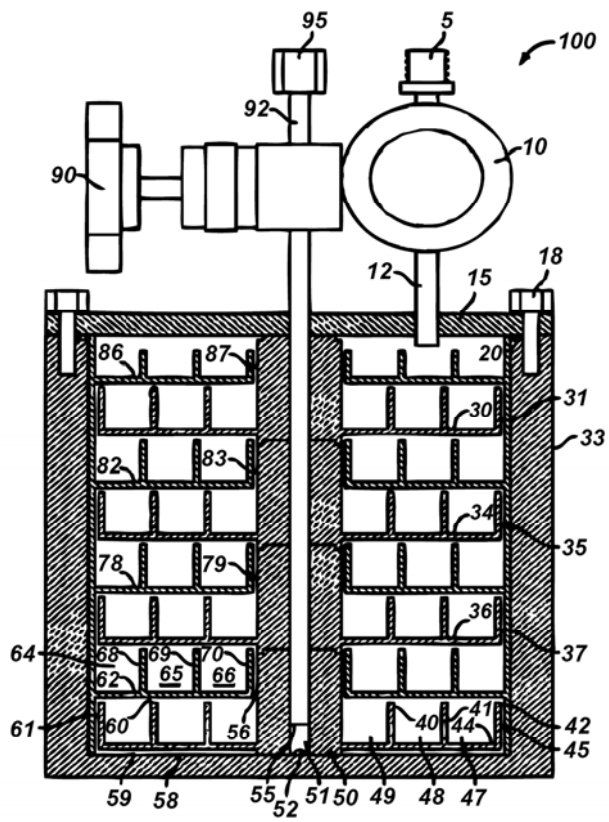

Fig. (9). Schematic presentation of the precursor sublimator (100) invented by Chaubey and Xu [37]. The cylindrical container (33), the sealable top (15), the dip (92) and outlet (12) tubes, and the disks and shelves (e.g. 30) are illustrated.

sor-loaded shelves gradually enrich the carrier gas during its movement from the bottom entrance to an outlet tube positioned at the top of the container. A reported example is the sublimation of hafnium tetrachloride powder, heated at 150°C. 500sccm to 1500sccm flow rates of N_2 carrier gas provide stable concentration of precursor vapor in the gas phase as demonstrated by a concentration sensor positioned at the outlet tube.

A main concern with this and other devices with similar geometry detailed hereafter is the efficient utilization of the initial charge. Indeed, efforts are spent to ensure well-determined and constant concentration output for as much of the original charge as possible and as high a delivery rate (flux) as possible. These constraints hold for all devices. In configurations like the one by Chaubey and Xu [37] the upstream trays deplete first. With the contribution from the upstream trays vanished, the downstream trays may not have sufficient time / surface to saturate the carrier gas. Precursor flux to the process drops and the properties of the deposited film change. Generaly speaking, there is no practical device which attains 100% utilization of the precursor load. A successfully designed one typically ensures yield of the original load equal or better than 90% at constant output.

Similar to Chaubey's one, the invention of Cleary *et al*. [38] concerns an apparatus for the sublimation of a solid precursor with two main characteristics: the first is that it is explicitly based on the principle of thermal homogeneity of the precursor material during operation. This is commonly admitted in all but some inventions on precursor sublimation, with noticeable exceptions such as those by Dando *et al*. [39] or Atwell and Westmoreland [40]. The second and most distinctive characteristic is that the invention focuses on the suppression of particle generation or particle presence and transportation in the precursor gas stream. The presence of particles in the feed gas of a process chamber such as ALD or CVD generation is considered as deleterious in various applications, with particular concerns in microelectronics. The invention consists of vertically stacked trays, positioned at the internal volume of a thermally regulated cylindrical vessel. A carrier gas enters the vessel from the top center through a down tube and is conveyed to the bottom of the internal volume below the lowest tray. It then travels upwards through the trays where the precursor powder is placed and exits the vessel from the top towards the process chamber. During its course it is saturated in the precursor gas without transporting particles. Figure **10** schematically illustrates this sublimator. Sublimation of hafnium tetrachloride is provided as an example of precursor transportation to ALD reactor for hafnium containing films in semiconductor manufacturing operations.

Marganski *et al*. [41] utilize a similar container envelope as the ones developed by Chaubey & Xu, Cleary *et al*. and Suzuki *et al*. [36-38] However, instead of being supported on shelves or trays, the precursor powder is compressed in the lower portion of the vessel by a porous plate, which is joined at its center to a vertical shaft. Pressure is applied to the plate by a biasing spring, which circumscribes the shaft as shown in Fig. (**11**). In this way, the plate maintains contact with the upper surface of the powder and moves downwardly during the consumption of the precursor. This is done by heating the vessel walls and/or the porous plate. The vapors of the sublimed precursor flow through the plate to the upper part of the vessel and are evacuated to a process chamber. This system prevents the formation of channeling in the stacked powder during sublimation and thus ensures high and constant exchange area. Monitoring of the consumption of the precursor is ensured by various technical solutions such as weighing the vessel or infrared sensors.

In the invention of Sandhu *et al*. a temperature-controlled precursor vessel is charged both with solid precursor and with inert solid particles such as ceramic beads that are approximately 1 to 2 mm in diameter [42]. The size of the beads is chosen to facilitate circulation of the carrier gas through the mixture. An impeller serves to mix the inert beads and the precursor and helps to distribute the heat evenly. The mechanical action also serves to create fresh surfaces for sublimation throughout the process. At the beginning of operation, the entire vessel is evacuated and sealed. Applying heat to the closed system promotes sublimation of the precursor particles and condensation onto the ceramic beads (as well as the vessel walls). Spreading the precursor evenly over the surfaces promotes a more uniform sublimation rate.

Tasaki *et al*. based their patent on the concept that sublimation of a precursor film distributed evenly over an inert surface (as opposed to a powder) would produce a more uniform flux of gaseous precursor because the precursor surface

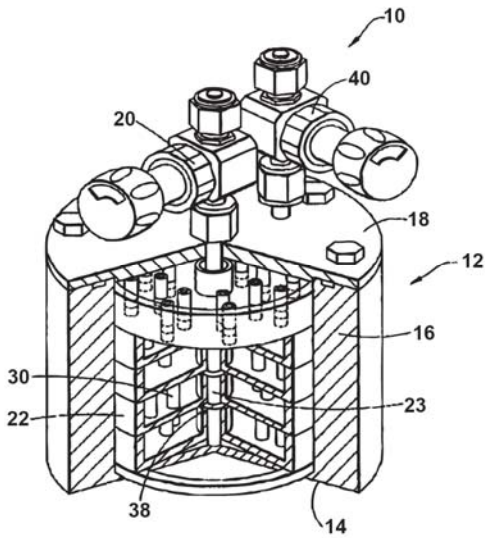

Fig. (10). Schematic illustration of the sublimator (10) patented by Cleary *et al*. [38]. The cylindrical vessel 12, the vertically stacked trays (22), the through tubes (30), the carrier gas downtube (23), the inlet (20) and outlet (40) valves are depicted.

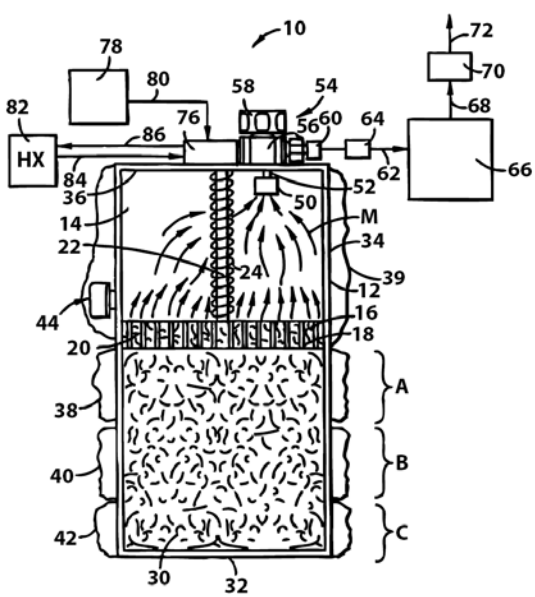

Fig. (11). Schematic front elevation view in partial cross section of a system for delivery of vapors from a solid source material in accordance of one embodiment of the patent by Marganski and Dietz. [41].

area would remain constant [43]. In one example, 10mm diameter glass spheres were dipped into molten precursor, removed and placed within a precursor vessel or packed into a tube through which flowed the carrier gas. Increasing the surface area of the inert spheres by the addition of a large number of smooth, hemispherical protuberances on their surface produced the expected effect of increasing the precursor flux. In a separate embodiment, the inventors coated precursor onto the surface of smooth steel discs, which were then stacked into a chamber that allowed a flow of carrier gas to entrain the gaseous precursor during operation. In addition to addressing the problem of a continuous change in the surface area of a precursor in powdered form, the embodiments of this patent in part help to address the problem of temperature non-uniformity because the precursor itself constitutes only a small portion of the mass within the precursor vessel.

In a design made to minimize the heat transport non-uniformity often encountered within a precursor vessel, Lei added heated baffles, rods, gratings or meshes to the interior of the precursor vessel onto which the precursor was coated [44]. This increases the surface area of the precursor, which will increase the rate at which the equilibrium vapor pressure is reached. By distributing the precursor in a layer over the heated surfaces a more uniform temperature may be maintained. The precursor can be applied to the surface by any one of a number of methods including dip-coating from solution or a melt or by compressing the precursor onto the surface. The patent notes that use of a rough surface of the heating element aids in precursor adhesion. In addition, by avoiding the use of a free-flowing powdered precursor, particle transport into the deposition zone is minimized.

In this invention of Derderian an intermediate, collection /delivery chamber is placed between a traditional, heated precursor vessel and the reactor [45]. At the start of the process the main precursor storage vessel is heated to sublime precursor, which is then condensed on the initially cooler surfaces within the intermediate chamber. After collection of sufficient precursor is complete, the collection/delivery chamber is heated and valves are opened to direct the flow of carrier gas and precursor vapor into the deposition chamber. The interior of the collection/delivery chamber is equipped with fins to increase the surface area. This has two effects. First, for a given thickness of precursor deposited, it both increases the amount that can be deposited and creates a greater flux of precursor vapor during the subsequent sublimation stage. Second, by maintaining a relatively thin precursor film, the precursor mass will be small allowing more effective control of the temperature. By providing a source of freshly sublimed precursor this invention will improve the uniformity of the precursor mass flow into the reactor compared to a traditional, heated precursor vessel because the portion of degradation products deposited within the collection/delivery chamber will be minimized. The inventors describe a modification of the design that incorporates multiple collection/delivery chambers connected in parallel so that one chamber can be filled while the other is being used to deliver precursor to the reactor.

The invention of Wang *et al*. describes a vapor delivery system comprising a vaporization vessel enclosing an interior volume that can be heated to vaporize the precursor, an inlet port for introducing the precursor, and an outlet port for discharging the precursor [3]. A process chamber is connected downstream the outlet port. A mass flow controller or a constant flow control valve can be placed in the vapor line to provide a controlled flow of vaporized source material. The vaporization vessel has a shape to facilitate the easy mixing of a carrier gas with the vaporized source material, i.e. a sphere, ellipsoid, barrel, cylinder, cone or combination of these shapes. It can also be a Knudsen cell in order to provide a controlled and constant flow of vaporized source material to the deposition reactor.

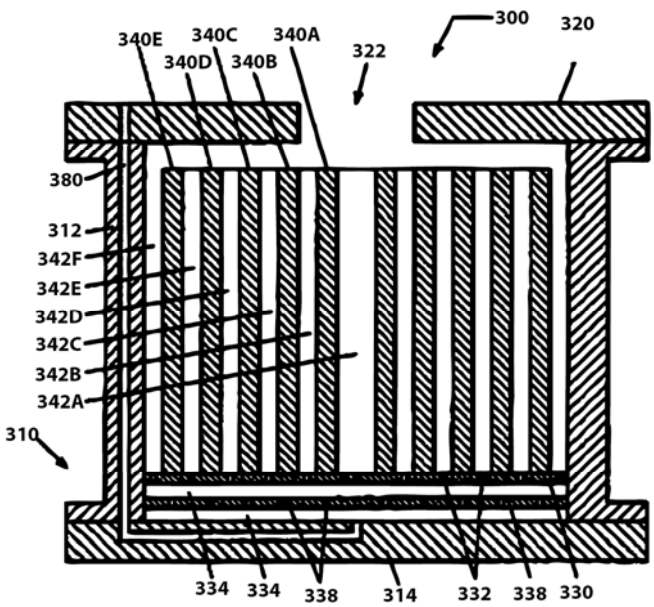

Fig. (12). Cross-sectional view of a film precursor vaporization system (300) according to an embodiment of the invention of Brcka [46]. It is composed of a container (310) with an outlet wall (312), a bottom (314) and a lid (320). The feed gas passes through the tubing (380), crosses a gas distribution plate (330) through openings (332) and leaches the cylindrical solid precursor elements (340A-E) before entering the process chamber through the outlet (322).

In a patent by Brcka the precursor is placed in a heating chamber containing a collection of concentric solid precursor cylinders supported on a gas distribution plate and configured in order to deliver a constant surface area to the carrier gas as the precursor is sublimed [46]. Figure **12** presents in cross-sectional view this system. The cylindrical solid precursor can be prepared by numerous processes, including sintering, stamping, dipping or spin coating process on cylindrical bodies, as these bodies can be heating elements. The flux of precursor out of the vaporization system is directly proportional to the exposed exchange surface, and when the inner and outer surfaces of the cylinders sublime at the same rate, the evolving surface area of each cylindrical body remains constant. In such conditions, a constant flux of precursor vapors can be achieved.

In the six patents previously mentioned, the inventors shape the precursor powders by applying them on the surface of foreign supports or shape the vaporization vessel with the main objective to increase and maintain unchanged the surface area of the solid precursor. In the next three patents, the inventors deal with the low lifetime of the precursor at the sublimation temperature due to its reduced thermal stability.

In the 2004 patent by Wang *et al*, the precursor is coated on a foreign support, namely a coil of wire that during operation is moved through a heated chamber where the precursor sublimes and is transported to the deposition surface [47]. As the precursor becomes depleted the wire can be moved thus exposing fresh precursor to the sublimation zone. Uniform heating of the precursor-coated wire can be aided by resistively heating the portion of the wire that is within the heated chamber. This design allows the precursor to be stored at room temperature thus improving its self-life. The only time it is heated is during sublimation and even if some decomposition accompanies sublimation, the nonvolatile decomposition products will be removed from the system rather than be allowed to accumulate in a precursor vessel.

The same concern about minimizing the exposure time of the precursor at high temperature necessary for sublimation lead Atwell and Westmoreland to invent a method of vaporizing precursors that uses localized heating of a small area of precursor by an infrared laser or a focused heat lamp [40]. A film of the precursor is deposited by condensing a sublimate or by evaporating a solution containing the precursor onto a cylinder or a flat disc. The cylinder or disc is than placed into an enclosed, pressure-controlled chamber designed to allow the cylinder or disc to be rotated during operation. The chamber housing includes a window through which the IR beam can be directed. Rotation and translation of the cylinder allows exposure of fresh precursor to the IR beam. The cylinder itself can be cooled by circulation of a coolant through its interior to minimize overheating of precursor that is adjacent to the focused beam. Thus, during operation the precursor that is not exposed to the beam is maintained at a temperature where it is thermally stable. The chamber housing is equipped with a carrier gas inlet located in close proximity to the heating zone. Following sublimation a stream of heated carrier gas sweeps the gaseous precursor into the deposition chamber.

The invention of Dando *et al.* also concerns the management of the thermal stability of thermally sensitive solid or liquid precursors during their exposure to elevated temperatures [39]. This is often the case when a chemical ampoule or other vessel is continuously heated to maintain an elevated vapor pressure of the precursor. Such long term exposure of the entire quantity of the precursor to elevated temperatures may result in its decomposition. The inventors tackle this problem by controlling the rate of vaporization exclusively at the surface of a precursor bed. To achieve this, they propose a method in which a precursor vaporizer in the form of energy source; i.e. a gas, a radio frequency coupling device, or an infrared irradiation source, interacts with the surface of the precursor. In this way, the surface is vaporized without heating the entire volume of the precursor such that substantially no thermal decomposition of the remaining compound occurs. The vaporized portion of the precursor is then transported to a CVD or ALD chamber.

The invention of Leusink is based on the need to reduce or eliminate maintaining the solid precursor at a high temperature in order to provide the desired supply of the precursor vapor [48]. The patent describes a process based on light-induced vaporization of a solid precursor. The vaporization system is configured to hold a solid precursor that is irradiated by a light source through an easily replaceable window. In general, the desired frequency of the light depends on the type of precursor to vaporize. If the energy of the light is too high; i.e. wavelength too Iow, premature dissociation of the precursor can take place in the precursor vaporization system instead of the desired vaporization of the precursor. The precursor vapors are flushed to the deposition chamber, through a distribution plate, by an optional carrier gas line, as the deposition chamber is maintained at reduced pressure. According to this invention, the solid precursor may be main-

tained at a temperature lower than what is needed for conventional thermal vaporization. This reduces premature decomposition and possible recrystallization of the precursor in the precursor vaporization system while providing the desired supply of the precursor.

The patent of Tuominen *et al*. describes a method to improve the efficiency of a sublimation chamber fed by a carrier gas [49]. Chemically inert and thermally conductive elements (powder, rods, fibers) are inserted in the solid precursor bed and enhance the thermal exchange surface and the temperature homogeneity in the bed. A microwave heating device can be used. This configuration decreases the overheating of the precursor, the crust formation over its surface and enhances its sublimation. The precursor sublimation rate uniformity is improved, and the amount of unused precursor is minimized.

The invention of Atwell and Vaartstra concerns a dispensing device for providing an electrically charged precursor spray into a vaporization zone. Once in the vaporization zone, a heated element having a second electrical charge opposite of the first attracts the charged precursor droplets or particles towards the hot surface whereupon vaporization occurs [50]. The aim is to have little unvaporized spray in the vaporization zone and on the walls. Figure **13** schematically illustrates this invention. The dispersing device is an electrostatic spray device that converts a liquid or solid (powder) precursor into an aerosol. The vaporization of the precursor can be controlled by adjusting the temperature or pressure of the vaporization zone. A detection device detecting the concentration of unvaporized precursor spray can be placed in the vaporizing apparatus. A CVD chamber receives the vaporized precursor. This process provides highly reproducible vaporization of precursors for CVD processes. Precursors sensitive to decomposition near the vaporization temperature can be used. However, it is worth recalling that suggested commercially available electrostatic sprayers may use voltages as high as 100 kV DC.

Efficient ways to feed process chambers with stable precursor flow also include minimizing the distance between the vaporization and the process chambers and establishing a regulation loop on the precursors flow. This approach was adopted in the next four patents. Brcka invented a CVD system in which the precursor sublimation unit is integrated with the process chamber [51]. This unit comprises a housing positioned above the process chamber and supports a precursor tray. The tray is coupled to a carrier gas supply system configured to flow the gas through the precursor, through the annular space between the tray and the housing, and through the opening in the bottom of the housing, which is aligned with an opening at the top of the process chamber. The invention also includes a precursor valve system disposed in the annular space configured to open up or to close off the flow of the precursor vapor to the deposition chamber. In addition, a baffle plate may be positioned between the sublimation system and the process chamber to ensure homogeneous distribution of the precursor gas above the substrate. Figure **14** schematically illustrates an embodiment of this invention. The provided example concerns sublimation of ruthenium carbonyl $Ru_3(CO)_{12}$ for the deposition of Ru to serve as a barrier layer in Cu integration schemes in microelectronics.

The invention of Sandhu mostly deals with monitoring a precursor gas flow rather than with generating precursor vapors itself [52]. It consists in a flow monitor to measure and regulate the flow of sublimed solid precursor from the sublimation to the deposition chambers. The flow monitor chokes the supply of vapor to the deposition chamber to regulate the vapor flow. To avoid condensation of the solid precursor in the delivery lines or the flow monitor, the vapor flow measured by the monitor is fed back to a microprocessor based controller arranged to adjust the supply of the vapor available at the inlet of the flow monitor. This is achieved by acting on a fast response heater in the sublimation chamber, and on a valve positioned upstream of the flow monitor. The former affects rapid changes to the sublimation temperature while the latter adjusts the amount of excess vapor siphoned by the valve.

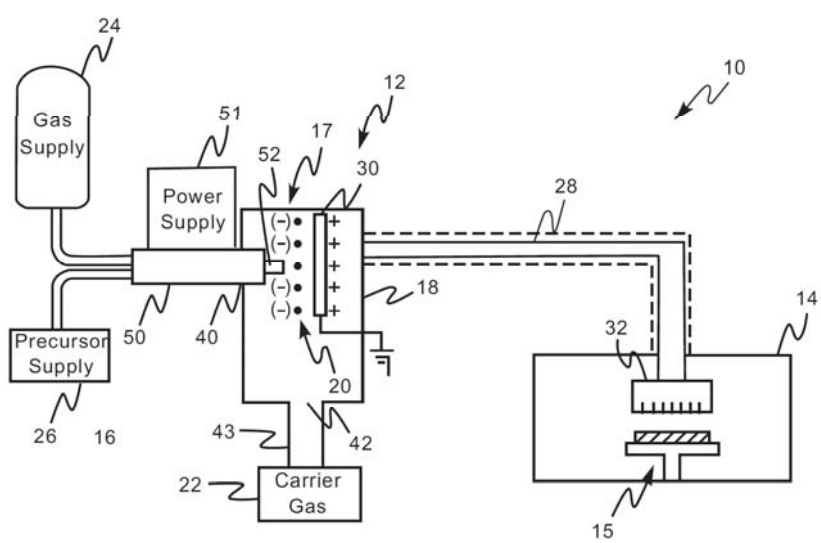

Fig. (13). Block diagram illustration of a vapor deposition system (10) including the CVD precursor vaporization apparatus (12) patented by Atwell and Vaartstra [50] that delivers a vaporized precursor to process chamber (14). The illustration includes an electrostatic dispensing device (16) which provides a charged precursor spray into the vaporization zone (20).

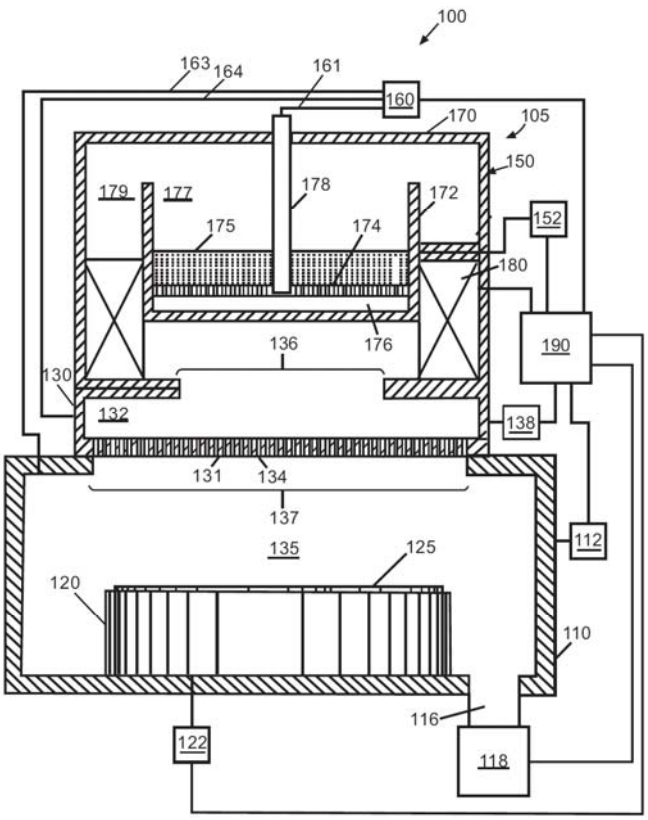

Fig. (14). Schematic illustration of an embodiment of the invention of Brcka [51]. The precursor delivery system 105' above the process chamber 110 contains the precursor bed 175. The introduction of the precursor vapor to the process chamber is ensured through the openings 136 and 137. A vapor distribution system 130, including the baffle plate 134 is positioned between the precursor delivery and the process chambers, which can be isolated from each other by a valve system 180.

In the invention of Ganguli *et al.* the precursor initially stored in a vessel as a solid, is sublimed by heating and is delivered to a process chamber by flowing a carrier gas into the vessel [4]. In a similar way as in the patent of Sandhu [52], a solid precursor delivery monitor (SPDM) is disposed in-line between the vessel and the process chamber. It is composed of a gas analyzer (typically a FTIR spectrometer) giving the precursor gas density and of a flow meter giving the volume flow rate of the process gas. A controller calculates a mass flow rate of precursor based on these two signals. The vessel may be any suitable container capable of withstanding the pressure and temperature required to sublime the precursor.

The invention of Oosterlaken is based on the concept that metering precursors in a liquid state can be more accurate than in a vapor phase, and that liquid state injection allows for larger doses of precursor to be delivered to the reaction chamber [53]. The solid precursor is melted by heating in a storage container. The liquid precursor is flowed into an intermediate liquid holding container and then to an intermediate, evaporation chamber in order to be vaporized and finally delivered into a reaction chamber. This process requires precursors having a melting point lower than their decomposition temperature. To prevent long-term heating and reduce thermal degradation of the precursor, only the lower part of the storage container can be heated or multiple storage containers can be used among which only a part of them are heated.

Bauch and Gudgel claimed for their invention maximum simplicity and reliability while avoiding precursor condensation [54]. According to this invention, a storage vessel for a solid and/or liquid precursor, at room temperature is connected through a line to a mass flow controller and then to the inlet of a vacuum pump, the precursor being admitted in the pump at a pressure P_{in}. A carrier gas is admixed in the pump, through a second mass flow controller, and the compressed gaseous mixture at a pressure $P_{out} > P_{in}$ is evacuated to the process chamber. The entire process is computer monitored by pressure sensors and valves inserted downstream of the pump output, in order to keep the precursor partial pressure below its saturation point. In order to assist the precursor, one development of the invention could be to heat the connecting lines and the storage vessel, and the temperature of these devices could be computer monitored. The inventors do not elaborate on the stability of fragile precursors in pumps environment, especially in the high pressure stages and in the presence of lubricants.

A recent delivery system patented by Woelk and coworkers [55] involves dividing the carrier gas flow into two separate streams. One of the streams is heated and flows through a chamber containing the solid precursor. The second stream bypasses the precursor chamber and is recombined with the first stream as the first stream emerges from the precursor chamber. This split carrier gas flow design is claimed to offer some important advantages. First, the mass flow rates of the two streams can be independently controlled allowing a lower flow rate through the solid precursor. The lower flow rate can minimize the formation of channels within the precursor bed and thereby lead to the generation of more uniform concentrations of precursor in the gas phase. The second advantage of working with two separate carrier gas streams results from mixing the two streams after one has been saturated with the precursor. The resulting dilution of the precursor reduces the likelihood that solid precursor will condense on the hardware leading to the reactor.

Atomic layer deposition (ALD) reactors require rapid (often fractions of a second) switching among the two (or more) precursors and the purge gas. When low vapor pressure solid precursors are used, they must be volatilized using elevated temperatures and mechanical valves can provide a site for unwanted condensation leading to clogging. As part of their design of an atomic layer deposition (ALD) reactor, Suntola *et al.* invented a solid precursor delivery system that has no mechanical valves placed between the precursor and the deposition zone [56]. During the delivery pulse, inert gas valving is used to flow the carrier gas over the solid precursor (located at "M" in Fig. (**15**)) and into the reactor. The precursor delivery pulse is halted by discontinuing the flow of carrier gas through the valve labeled 44 and initiating a carrier gas through the inlet labeled 49. The reverse flow exits the system through the vacuum pump labeled 50. Cooling coils (labeled 48) are added to condense the gaseous precursor before the carrier gas enters the pump.

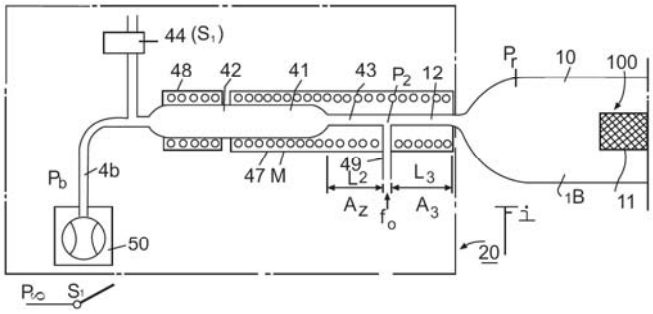

Fig. (15). The solid precursor delivery system (labeled 20) is coupled directly to the atomic layer deposition chamber [18]. Inert gas valving is used to control the direction of the carrier gas flow over the solid precursor (M) [56].

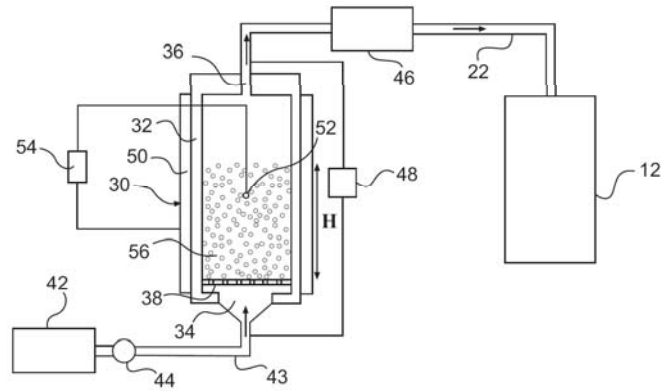

Fig. (16). Schematic illustration of a fluidized bed sublimator invented by Vahlas *et al.* [58] According to this embodiment, the sublimator is fed in its bottom by inert gas through a line (43) and a mass flow controller (44). The temperature of the enclosure (32) is monitored through a thermocouple (52). The fluid flow saturated with precursor vapors feed the process chamber (12) through a thermally regulated tube (22) which contains a filter (46) preventing particles which are eventually transported in the tube from entering the processing chamber. The differential pressure sensor (48) enables directly controlling the good fluidization state of the solid precursor.

One of the most efficient ways to improve the transport phenomena in gas-particle systems is the use of fluidized bed (FB) technology. In the invention of Henery fluidization is dissociated from sublimation [57]. According to this invention, a fluidization chamber at a temperature below the vaporization temperature of the precursor allows heating the powder precursor by flowing a gas. An outlet conduit allows the fluidizing gas and suspended or dispersed particulate solid precursor to be drawn from the fluidization chamber. Connected to this conduit, a vacuum ejector (aspirator) allows a mixture of the fluidizing gas and particulate solid precursor to be withdrawn from the chamber and mixed with an additional volume of diluent gas at a second, higher temperature but lower than the precursor decomposition temperature. This particle/gas mixture is admitted to a vaporization chamber from which the diluted precursor vapors are distributed through nozzles to the substrate to be coated by CVD. This is one of the very early patents on sublimation involving fluidization of precursor powders. It does not deal with the question of particle elimination from the feeding gas prior to introduction to the process chamber.

The first who adapted this technology for the simultaneous sublimation of solid precursors and the transport of their vapors to a process chamber are Vahlas *et al.* [58] in this invention, the traditional precursor vessel is replaced by a fluidized bed system in which the solid precursor or a mixture of the solid precursor and inert particles are subjected to a carrier gas flow sufficient to fluidize the entire mixture. Fluidized bed reactors are renowned for their ability to maintain uniform mass and heat transfer behavior throughout a reactor comprising solid particles and gaseous components. This overcomes many of the problems associated with traditional precursor vessels and leads to a uniform precursor mass flow into the CVD/ALD reactor. Figure **16** schematically illustrates this invention.

In appropriate conditions of gas flow rate, a fluidized bed is obtained; i.e. powder behaves as a fluid, due to intense mixing of particles generated by the gas flow. In particular, high thermal and mass transfer rates exist inside the fluidized bed, ensuring quasi-perfect isothermal conditions to the particles. These high transfer rates explain that when heated at an appropriate temperature in a bed fluidized by an inert gas like nitrogen N_2, the precursor powder is sublimed providing high, stable and fully reproducible vapor concentration. Even with carrier gas flows as high as a few tens of standard liters per minute (slm), it is possible to maintain precursor concentrations at saturation.

Precursor transport efficiency measurements were performed using aluminum acetylacetonate ($Al(acac)_3$), a low vapor pressure compound used as a precursor for the CVD of alumina films. Inert corundum (aluminum oxide) particles and $Al(acac)_3$ powder were charged to the fluidized bed sublimator Fig. (**16**), which was maintained at 120°C throughout the measurements. The results are presented in the two diagrams of Fig. (**17**). Figure (**17a**) presents the evolution of the flow rate of $Al(acac)_3$ in g/h as a function of the carrier gas, N_2 flow rate in slm. A linear evolution is observed, revealing precursor saturation of the gas phase, even at very high N_2 flow rates, namely 14 slm. Figure (**17b)** presents the evolution of the mass flow rate of $Al(acac)_3$ as a function of working time for a flow rate of N_2 equal to 10slm. A constant flow rate is observed for more than 80 h of operation, corresponding to a compound consumption of 28g, to be compared with the initial mass of 52g. The reported uncertainty in this diagram is due to the adopted technique for the determination of the quantity of the sublimed vapors. This consists in condensing them at the exit of the sublimator in a series of cold traps, which present a high, but not perfect trapping efficiency. In Fig. (**17b**), the evolution of the flow rate of $Al(acac)_3$ as a function of working time is also presented for a classic, fixed bed sublimator operating in the same conditions as the fluidized bed one except that the initial precursor mass is in this case 10g. It can be observed that the flow of the sublimed $Al(acac)_3$ at the exit of the fixed bed sublimator rapidly decreases with time due to the formation of channels in the packed powder where the carrier gas preferential passes through.

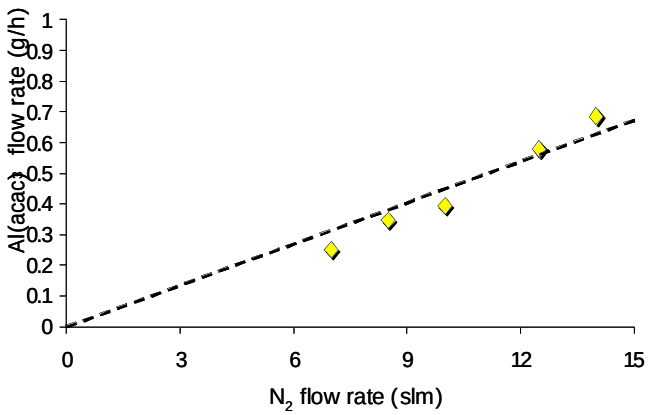

(a)

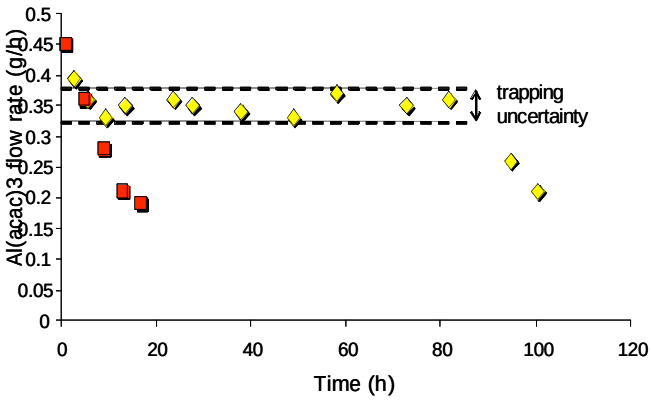

(b)

Fig. (17). Al(acac)$_3$ flow rate (g/h) in the invention of Vahlas *et al*. [58] as a function of N_2 flow rate (slm) (17a) and as a function of sublimation duration (17b). In the later diagram, diamonds and squares correspond to sublimation in a fluidized bed and in a fixed bed, respectively.

A particularly similar invention has recently been reported by Snljders and Raaijmakers [59].

Despite the strong potential of fluidized bed sublimators, there are but few chemical compounds which can be fluidized in the as received state. While mixing with inert, easily fluidizable powders is a convenient solution to overcome this drawback, a complementary one could be the interaction with chemicals suppliers with the aim to provide powders of such compounds whose characteristics are compatible with the fluidization requirements.

CURRENT & FUTURE DEVELOPMENTS

A fundamental review of technical approaches to geneate vapor phases form liquid or solid precusors was presented. This issue is important for gas phase chemical deposition processed such as chemical vapor deposition or atomic layer deposition. The selected technical developments cover main solutions proposed since nineties. Progress is continuing in this field with new inventions being patented every year.

The patents reviewed in this article provide details about invention designs, but few provide quantitative transport measurements and information on the organic precursors tested. This lack of data makes it difficult to compare and proceed to the selection of the most appropriate device for a given precursor and overall to the design of CVD systems or other processes that require precursor delivery. At the core of many of the designs, the inventors focus on a common set of issues. First, the design should maximize the precursor mass flow rate into the deposition zone. Second, the design should allow the precursor delivery rate to be uniform over the length of the deposition process. Third, the design should allow the precursor delivery rate to be reproducible from one run to the other, operated in the same conditions. Fourth, the design should maximize the precursor stability by storing it well below the temperature that is ultimately needed to vaporize it. Finally, the precursor delivery process should minimize the introduction of impurities into the film, including particles.

For high vapor pressure liquids, such as trimethylaluminum, traditional bubblers work well. For low vapor pressure liquids many of the patents describe methods to store the precursor at lower temperature, then pump the liquid as needed into a vaporization chamber and transport the vapor into the deposition zone. A variety of methods convert the liquid flow into an aerosol as it enters the vaporization chamber. The small aerosol droplets evaporate quickly leading to a carrier gas saturated with precursor. Precursor delivery rates can be controlled and sustained by regulation of the liquid flow.

Solid precursor delivery creates special challenges associated with constantly changing precursor surface area, undesirable temperature gradients and channeling of the carrier gas within the precursor powder. A common solution to this problem involves dissolving the solid in a suitable solvent and using one of the liquid precursor delivery systems to dispense the solution into the vaporization chamber. As long as the solid is stable in solution and the solvent does not introduce impurities, this is a reasonable approach. Here, the question arises as to whether vaporization is congruent or it mainly concerns the solvent. In the latter case, part or the entire precursor is re-condensed in the vaporization volume, leading to inefficient yield of the process and to frequent and time consuming maintenance of the vaporization equipment. An alternative approach to make the solid behave like a liquid is, by definition the use of fluidized bed technology. In such a way, a uniform precursor flux is directly created from the solid. Between these two cases, some of the designs describe methods to spread the solid precursor over a larger area either as a fixed powder bed or a thin coating. The common objective of all sublimation based technologies is to increase the surface area, to maintain it constant, and either to ensure uniform heating or, alternatively, to minimize the thermal load of the precursor by local or temporary heating.

Last but not least, the more the apparatus is complex, the more the requirements for servicing are high. Such servicing may include frequent interruption of the operation and/or replacement of sensitive parts, such as filters or injectors. It is critical in the case of change of the nature of the precursor.

CONFLICT OF INTEREST

The authors confirm that this article content has no conflict of interest.

ACKNOWLEDGEMENTS

These authors contributed equally to this work: Brigitte Caussat, François Senocq. This author collected and analyzed data: Elizabeth J. Gladfelter. These authors jointly supervised this work: Constantin Vahlas, Wayne L. Gladfelter. All authors equally wrote the paper. Part of this research was supported by the l'AVAMIP contract #08010193 and by the Centre National de la Recherche Scientifique. CIRIMAT assisted in meeting the publication costs of this paper

REFERENCES

[1] Belin-Ferre E, editor. Book Series on Complex Metallic Alloys. Singapore: World Scientific; 2008-10.

[2] Dobkin DM, Zuraw MK, editors. Principles of Chemical Vapor Deposition: Springers-Science+Buisiness Media, B.V.; 2003.

[3] Wang, L., Baum, T.H., Xu, C. Delivery systems for efficient vaporization of precursor source material. US6909839 (**2005**).

[4] Ganguli, S., Ku, V.W., Chung, H., Chen, L. Method and apparatus for monitoring solid precursor delivery. US6772072 (**2004**).

[5] Vahlas C, Guillon H, Senocq F, Caussat B, Bonnafous S. Solvent-free method for intense vaporization of solid molecular and inorganic compounds. Gases & Instrumentat 2009; 3(1): 20-3.

[6] Hersee SD, Ballingall JM. The operation of metalorganic bubblers at reduced pressure. J Vac Sci Techn 1990; A8(2): 800-4.

[7] Middleman S. Some problems related to the performance of an evaporator as a vapor delivery system. J Cryst Growth 1991; 114: 13-21.

[8] Love A, Middleman S, Hochberg AK. The dynamics of bubblers as vapor delivery systems. J Cryst Growth 1993; 129: 119-33.

[9] Mayer B, Collins CC, Walton M. Transient analysis of carrier gas saturation in liquid source vapor generators. J Vac Sci Technol A 2001; 19(1): 329-44.

[10] Maury F, Duminica FD, Senocq F. Optimization of the vaporization of liquid and solid CVD precursors: Experimental and modeling approaches. Chem Vap Dep 2007; 13: 638-43.

[11] Vahlas C, Caussat B, Senocq F, Gladfelter WL, Aloui L, Moersch T. An original device for the delivery of vapors to a deposition apparatus based on the sublimation in a fluidized bed. Chem Vap Dep 2007; 13(2-3): 123-9.

[12] Paz, D.A.C.A., McMillan, L.D., Solayappan, N., Bacon, J.W. Method and apparatus for fabrication of thin films by chemical vapor deposition. US6511718 (**2003**).

[13] Antoine C. Tensions des vapeurs: Nouvelle relation entre les tensions et les températures. Comptes Rendus Hebd des Séances de l'Acad Sci 1888; 107: 681-4, 778-80, 836-7.

[14] Soubeyrand, M.J., McCurdy, R.J. Preparation of vaporized reactants for chemical-vapor deposition of coatings on hot substrates. WO9105743 (**1991**).

[15] McMillan, L.D., Paz de, A.C.A., Roberts, T.L. Apparatus for forming a thin film with a mist forming means. US5316579 (**1994**).

[16] Ott, K.C., Kodas, T.T. Aerosol chemical vapor deposition of metal oxide films, especially superconductors, and films thus deposited. US509120A0 (**1992**).

[17] Ewing, J.H. Liquid pump and vaporizer. US5361800 (**1994**).

[18] Kaloyeros, A.E., Eisenbraun, E.T., Zheng, B. Process for the use of solid precursor sources in liquid form for vapor deposition of materials US5376409 (**1994**).

[19] Versteeg, V.A., Avedisian, C.T., Raj, R. Method and apparatus for CVD using liquid delivery system with an ultrasonic nozzle. US5451260 (**1995**).

[20] Boer, H.J. Method and device for transforming a liquid flow into a gas flow. EP559259 (**1993**).

[21] Klinedinst, K.A., Lester, J.E. Apparatus and method for the controlled delivery of vaporized chemical precursor to an LPCVD reactor. CA2143071 (**1995**).

[22] Li, T.K., Scott, D.C. Modular liquid vaporizing apparatus. US5835678 (**1998**).

[23] Senateur, J.-P., Madar, R., Weiss, F., Thomas, O., Abrutis, A. Apparatus for introducing percursors into a chamber for chemical vapor deposition. FR2707671 (**1995**).

[24] Yu, Y.S., Park, Y.J., Baek, Y.K., Kim, J.C. Metalorganic chemical vapor deposition apparatus and method. DE19738330 (**1998**).

[25] Loan, J.F., Salerno, J.P. Method for chemical vapor deposition of a material on a substrate. US6136725 (**2000**).

[26] Solayappan, N., Grant, R.W., McMillan, L.D., Paz de, ACA. Method and apparatus for misted liquid source deposition of thin film with reduced mist particle size. US6258733 (**2001**).

[27] Fang, C.-P., Hillman, J.T. Precursor deposition using ultrasonic nebulizer. WO2001038601 (**2001**).

[28] Brutti, T., Pierret, B., Guillon, H. Evaporator for a CVD apparatus. EP1098015 (**2001**).

[29] Hillman, J.T., Yasar, T., Kubo, K., Vezin, V., Yamasaki, H., Kojima, Y., Yumiko, K., Hideki, Y. Apparatus and method for delivery of precursor vapor from low vapor pressure liquid sources to a CVD chamber. WO2001036707 (**2001**).

[30] Sun, J.J., Liu, B.Y.H. Method and apparatus for vapor generation and film deposition. US6409839 (**2002**).

[31] Westmoreland, D.L., Sandhu, G.S. High efficiency method for performing a chemical vapor deposition utilizing a nonvolatile precursor. US7182979 (**2007**).

[32] Liu, B.Y.H., Dinh, T.M., Ma, Y. Fine droplet atomizer for liquid precursor vaporization. WO2011097238 (**2011**).

[33] Marsh, E.P., Atwell, D.R. Chemical vaporizer for material deposition systems and associated methods. US8551564 (**2013**).

[34] Shenai-Khatkhate, D.V. Vapor phase delivery device. US20110256313 (**2011**).

[35] Shenai-Khatkhate, D.V., Timmons, M.L., Marsman, C.J., Woelk, E., Dicarlo, R.L. Vapor phase delivery device for solid precursor compounds and a film deposition method using the device. US7722720 (**2010**).

[36] Suzuki, K., Guidotti, E.P., Leusink, G.J., Hara, M., Kuroiwa, D., Malhotra, S.G., Fenton, M., Robert, R.Y. Method for preparing solid precursor tray for use in solid precursor evaporation system. US7488512 (**2006**).

[37] Chaubey, T., Mindi, X. Solid precursor sublimator. US0181168 (**2009**).

[38] Cleary, J.M., Arno, J.I., Hendrix, B.C., Naito, D., Battle, S., Gregg, J.N., Michael, J.W., Chongying, X, Solid precursor-based delivery of fluid utilizing controlled solids morphology. US20100255198 (**2014**).

[39] Dando, R.S., Carpenter, C.M., Mardian, A.P., Derderian, G.J., Gealy, D. Method and apparatus for delivering precursors. US6797337 (**2004**).

[40] Atwell, D., Westmoreland, D.L. Vapour delivery system for solid precurseurs and method regarding same. US5674574 (**1997**).

[41] Marganski, P.J., Dietz, J.I., Sweeney, J.D. System for delivery of reagents from solid sources thereof. WO2006101767 (**2006**).

[42] Sandhu, G.S., Meikle, S.G., Wetmoreland, D.L. Method and apparatus for subliming precursors. US5377429 (**1995**).

[43] Tasaki, Y., Sato, M., Yoshizawa, S., Onoe, A., Chikuma, K., Yoshida, A. Method of subliming material in CVD film preparation method. US5904771 (**1999**).

[44] Lei, L.C. Apparatus and method for vaporizing solid precursor for CVD or atomic layer deposition. US6718126 (**2003**).

[45] Derderian, G.J. Solid source precursor delivery system. US7109113 (**2005**).

[46] Brcka, J. Solid precursor vaporization system for use in chemical vapor deposition. US7651570 (**2006**).

[47] Wang, L., Baum, T.H., Xu, C. Vapor delivery system for solid precursors and method for using it. US6740586 (**2004**).

[48] Leusink, G.J. Method and system for depositing a layer from light-induced vaporization of a solid precursor. US8197898 (**2012**).

[49] Tuominen, M., Shero, E., Verghese, M. System for controlling the sublimation of reactants. US8309173 (**2003**).

[50] Atwell, D.R., Vaartstra, B.A. Electrostatic method and apparatus for vaporizing precursors and system for using same. US6280793 (**2001**).

[51] Brcka, J. Method and system for depositing material on a substrate using a solid precursor. US7132128 (**2006**).
[52] Sandhu, G.S. Delivery of Solid Chemical Precursors. US6701066 (**2004**).
[53] Oosterlaken, T.G.M. Delivery of vapor precursor from solid source. US8012876 (**2010**).
[54] Bauch, H., Gudgel, T. Handling device for gaseous precursor for CVD treatment. EP1967610 (**2008**).
[55] Woelk, E., Dicarlo, R.L. Vapor delivery device, methods of manufacture and methods of use. US8776821 (**2014**).
[56] Suntola, T.S., Pakkala, A.J., Lindfors, S.G. Apparatus for performing growth of compound thin films. US4389973 (**1983**).
[57] Henery, V.A. Deposition of coatings from vaporized reactants. US4351861 (**1982**).
[58] Vahlas, C., Caussat, B., Senocq, F., Gladfelter, W.L. Dispositif de fourniture de vapeurs d'un précurseur solide à un appareil de traitement. WO2006058895 (**2006**).
[59] Snljders, G.J., Raaijmakers, I. Method for vaporizing non-gazeous precursor in a fluidized bed patent. US8343583 (**2013**).