HAL
open science

Spin-Boson Quantum Phase Transition in Multilevel Superconducting Qubits

Kuljeet Kaur, Théo Sépulcre, Nicolas Roch, Izak Snyman, Serge Florens, Soumya Bera

To cite this version:

Kuljeet Kaur, Théo Sépulcre, Nicolas Roch, Izak Snyman, Serge Florens, et al.. Spin-Boson Quantum Phase Transition in Multilevel Superconducting Qubits. Physical Review Letters, 2021, 127 (23), pp.237702. 10.1103/PhysRevLett.127.237702 . hal-03441872

HAL Id: hal-03441872

https://hal.science/hal-03441872v1

Submitted on 11 Aug 2023

HAL is a multi-disciplinary open access archive for the deposit and dissemination of scientific research documents, whether they are published or not. The documents may come from teaching and research institutions in France or abroad, or from public or private research centers.

L'archive ouverte pluridisciplinaire **HAL**, est destinée au dépôt et à la diffusion de documents scientifiques de niveau recherche, publiés ou non, émanant des établissements d'enseignement et de recherche français ou étrangers, des laboratoires publics ou privés.

Spin-Boson Quantum Phase Transition in Multilevel Superconducting Qubits

Kuljeet Kaur,[1] Théo Sépulcre,[2] Nicolas Roch,[2] Izak Snyman,[3] Serge Florens,[2] and Soumya Bera[1]
[1]*Department of Physics, Indian Institute of Technology Bombay, Mumbai 400076, India*
[2]*Univ. Grenoble Alpes, CNRS, Institut Néel, F-38000 Grenoble, France*
[3]*Mandelstam Institute for Theoretical Physics, School of Physics, University of the Witwatersrand, Johannesburg, South Africa*

(Received 14 October 2020; revised 21 September 2021; accepted 8 November 2021; published 3 December 2021)

Superconducting circuits are currently developed as a versatile platform for the exploration of many-body physics, by building on nonlinear elements that are often idealized as two-level qubits. A classic example is given by a charge qubit that is capacitively coupled to a transmission line, which leads to the celebrated spin-boson description of quantum dissipation. We show that the intrinsic multilevel structure of superconducting qubits drastically restricts the validity of the spin-boson paradigm due to phase localization, which spreads the wave function over many charge states. Numerical renormalization group simulations also show that the quantum critical point moves out of the physically accessible range in the multilevel regime. Imposing charge discreteness in a simple variational state accounts for these multilevel effects, which are relevant for a large class of devices.

DOI: 10.1103/PhysRevLett.127.237702

Quantum computation has been hailed as a promising avenue to tackle a large class of unsolved problems, from physics and chemistry [1] to algorithmic complexity [2]. This research follows an original proposition from Feynman [3], long before the technological and conceptual tools were developed to make such ideas tangible [4]. While a general purpose digital quantum computer could theoretically outperform classical hardware for some exponentially hard tasks, building such a complex quantum machine is at present out of reach. For this reason, analog quantum simulation has been put forward as a crucial milestone [5], aiming at the design of fully controllable experimental devices mimicking the features of difficult quantum problems of interest. This route has met tremendous success in the past, with the realization of Kondo impurities in quantum dots [6], the simulation of artificial solids in optical lattices [7], and is gaining momentum with new tools from superconducting circuits [8–14]. Ironically, while Feynman anticipated quantum simulators [3], he often warned in his lectures (where analogy was used as a powerful teaching method) that there is no such thing as a perfect analogue, and that some interesting physics can emerge when the analogy breaks down [15]. Exploring realistic superconducting circuits for the emulation of strongly interacting quantum spin systems is the main purpose of this Letter. By underlining the crucial role of multilevel effects, we aim to unveil the peculiar many-body physics of such simulators. Our study will focus on the realm of quantum dissipation [16,17], a problem that is still raising increasing interest [10,18,19] due to potential applications ranging from hardware-protected qubits [20,21] to quantum optics with metamaterials [22]. Many ideas that will be presented here will, however, apply to the more general context of superconducting simulators of many-body problems [23].

Addressing the full complexity of superconducting circuit simulators raises a long list of theoretical challenges, and we emphasize already now the four unsolved issues related to multilevel physics that we tackle in this Letter. (i) Most quantum simulation protocols assume that qubits behave as idealized spin $1/2$ degrees of freedom. While a large class of mesoscopic systems fall under this assumption [24–29], this is clearly questionable for superconducting qubits where the nonlinearity is only provided by the cosine Josephson potential. Indeed, we show that the two-level description can be invalid for many-body ground states due to proliferation of multilevel states (at strong driving [30], multilevel effects are known to even plague a single Josephson junction). (ii) Quantitative modeling of simulators involving a large number of qubits or resonators requires to incorporate the full capacitance network of the circuit [18,31–34]. We will see that such electrokinetic considerations impose strong constraints for models based on multilevel qubits, that can even prevent the occurrence of quantum phase transitions. (iii) Effects beyond the simple RWA approximation can be difficult to simulate numerically due to the exponential size of the Hilbert space, making the study of many-body dissipation challenging [35–37]. We find, however, that handling the complete multilevel structure of Josephson qubits can be tackled by the numerical renormalization group (NRG). (iv) Finally, random charge offsets are a notorious experimental nuisance for the operation of superconducting circuits in strongly nonlinear regimes, but are also difficult to model, because they cannot be captured by a Kerr expansion [30,38]. We propose here a simple wave function encoding

 © 2021 American Physical Society

multilevel charge discreteness, that remarkably reproduces our full NRG simulations. This simple analytical theory can be extended beyond dissipative models, e.g., to study bulk quantum phase transitions [39–41] in the presence charge noise [42].

Numerous theoretical works have recently studied the ultrastrong coupling physics of superconducting qubits, based on the two-level approximation [43–48]. While this assumption is valid for the Cooper pair box (a qubit designed with strong charging energy), this regime is, however, unfavorable experimentally due to high sensitivity to external charge noise. A more realistic circuit is shown in Fig. 1, composed of a superconducting charge qubit containing a junction with Josephson energy E_J and capacitance $C_J = C_s + C_g$, where C_s is a shunt capacitance and C_g is a gate capacitance, that is capacitively coupled via C_c to a transmission line characterized by lumped element inductance L and capacitance C. All nodes are grounded *via* capacitances C_g, and a dc charge offset controlled by voltage V_g is included on qubit node 0, appearing as dimensionless charge $n_g = V_g C_g/2e$. We will not make any assumption on all these parameters here. The transmission line may be designed in practice from an array of linear Josephson elements [18], in order to boost its coupling to the qubit, thanks to the high optical index $n \simeq 100$ which slows down accordingly the velocity of microwave modes. The circuit Lagrangian reads [49] (working in units of $\hbar = 2e = 1$)

$$\mathcal{L} = \frac{1}{2}\dot{\vec{\Phi}}^{\intercal}\boldsymbol{C}\dot{\vec{\Phi}} - \frac{1}{2}\vec{\Phi}^{\intercal}\mathbf{1}/\boldsymbol{L}\vec{\Phi} + E_J\cos(\Phi_0) - n_g\dot{\Phi}_0, \quad (1)$$

where $\vec{\Phi} = (\Phi_0, \Phi_1, \cdots)$ is a vector of dimensionless node fluxes labeled according to Fig. 1. $\boldsymbol{C}$ and $\mathbf{1}/\boldsymbol{L}$ are the capacitance and inductance matrices read from Fig. 1, that define a generalized eigenvalue problem $\mathbf{1}/\boldsymbol{L}\boldsymbol{P} = \boldsymbol{C}\boldsymbol{P}\boldsymbol{\omega}^2$, $\boldsymbol{\omega}$ being the diagonal matrix of the system eigenfrequencies, bringing the Lagrangian in normal mode form in the new basis $\vec{\phi} = \boldsymbol{P}^{-1}\vec{\Phi}$. The qubit degree of freedom can be separated from the external modes via the change of variables $\varphi = \sum_k P_{0k}\phi_k$ and $\varphi_m = \phi_m$ [50]. Once the bath modes φ_m are quantized in terms of creation or annihilation operators, we obtain the following Hamiltonian:

$$\hat{H} = \sum_k \omega_k \hat{a}_k^\dagger \hat{a}_k + (\hat{n} - n_g)\sum_k i g_k(\hat{a}_k^\dagger - \hat{a}_k) + 4E_c(\hat{n} - n_g)^2 - E_J\cos\hat{\varphi}, \quad (2)$$

which we name the "charge-boson model," as the charging $4E_c(\hat{n} - n_g)^2 = 4E_c\sum_n(|n\rangle\langle n| - n_g)^2$ and Josephson energy $E_J\cos\hat{\varphi} = (E_J/2)\sum_n(|n\rangle\langle n+1| + \text{H.c.})$ are represented in the full multilevel charge basis $\{|n\rangle\}$ with $n \in \mathbb{Z}$. This model generalizes to many levels the standard two-level "spin-boson model" describing quantum dissipation [16,17]. Indeed, for a Cooper pair box in the regime $E_c/E_J \gg 1$, one can truncate the full spectrum of the Josephson junction to the two charge states closest to n_g, namely, $n_0 = \lfloor n_g \rfloor$ and $n_0 + 1$, so that the charge operator reads $\hat{n} \simeq n_0|\uparrow\rangle\langle\uparrow| + (n_0+1)|\downarrow\rangle\langle\downarrow|$, while $\cos\hat{\varphi} \simeq (|\uparrow\rangle\langle\downarrow| + |\downarrow\rangle\langle\uparrow|)/2 = \hat{\sigma}_x/2$. At the charge degeneracy point $n_g = 1/2 + \text{integer}$, we find $\hat{n} - n_g \simeq \hat{\sigma}_z/2$, so that Eq. (2) takes the usual spin-boson form.

In the charge-boson Hamiltonian (2), $g_k = \sqrt{\omega_k/2}P_{0k}$ are the couplings to the bosonic normal modes, and the qubit charging energy obeys

$$4E_c = \frac{P_{00}^2}{2} + \sum_{k\neq 0}\frac{g_k^2}{\omega_k} = \frac{1}{2C_J + 2C_c} + \frac{1}{\pi}\int_0^\infty \mathrm{d}\omega\frac{J(\omega)}{\omega}. \quad (3)$$

Here $J(\omega) = \pi\sum_k g_k^2\delta(\omega_k - \omega)$ lumps together the couplings to all modes into a spectral function that is smooth for an infinite chain [16,17]. For the circuit of Fig. 1, $J(\omega) = 2\pi\alpha\omega\sqrt{1 - \omega^2/\omega_P^2}/(1 + \omega^2/\omega_J^2)\theta(\omega_P - \omega)$, with dissipation strength $2\pi\alpha = (4e^2/h)[C_c/(C_c + C_J)]^2\sqrt{L/C_g}$, plasma frequency $\omega_P = 1/\sqrt{L(C + C_g/4)}$, and a nontrivial RC cutoff of the junction $\omega_J = 1/\sqrt{LC_{\text{eff}}}$ with $C_{\text{eff}} = C_J C_c/(C_J + C_c) + (C_J C_c)^2/[C_g(C_J + C_c)^2] - C$ [50].

In order to unveil the crucial role of the multilevel structure in the dissipative Hamiltonian (2), we eliminate the capacitive coupling via a unitary transform $\hat{U} = \exp[i(\hat{n} - n_g)\sum_k(g_k/\omega_k)(\hat{a}_k^\dagger + \hat{a}_k)]$, resulting in

$$\hat{U}\hat{H}\hat{U}^\dagger = \sum_k \omega_k \hat{a}_k^\dagger \hat{a}_k + \left(4E_c - \frac{1}{\pi}\int_0^\infty \mathrm{d}\omega\frac{J(\omega)}{\omega}\right)(\hat{n} - n_g)^2 - E_J\cos\left[\hat{\varphi} - \sum_k(g_k/\omega_k)(\hat{a}_k^\dagger + \hat{a}_k)\right]. \quad (4)$$

This expression shows that the charging energy E_c and the spectral function $J(\omega)$ of the environment are not independent parameters, since taking E_c down to zero would

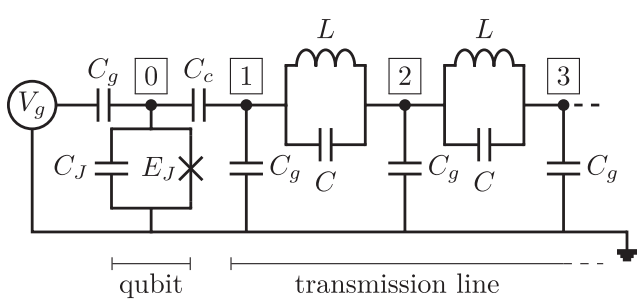

FIG. 1. Microscopic electrokinetic model for a realistic circuit of dissipative superconducting charge qubit, located at node 0, characterized by Josephson energy E_J, shunt capacitance C_s, and capacitively coupled via C_c to a transmission line. All nodes are shunted to the ground via the capacitance C_g, and each lumped element in the line is characterized by its inductance L and self-capacitance C. Charge offsets are modeled by a dc voltage source V_g.

result in a negative capacitance. Indeed, Eq. (3) clearly shows that the capacitance always stays positive. However, the constraint $4E_c > (1/\pi)\int_0^\infty d\omega J(\omega)/\omega$ becomes hidden upon making the two-level approximation, since the quadratic charging term disappears in the spin-boson model when taking the limit $E_c \to \infty$. This implies that the dissipation strength α has an upper bound:

$$\alpha \leqslant \alpha_{\max} = 2E_c/\omega_c. \tag{5}$$

with $\omega_c \simeq \mathrm{Min}(\omega_P, |\omega_J|)$, as obtained by parametrizing the spectral function as $J(\omega) = 2\pi\alpha\omega \exp(-\omega/\omega_c)$. Such electrostatic constraint must be fulfilled for any microscopic model, and we provide the exact bound for the circuit of Fig. 1 in the Supplemental Material [50]. From Eq. (3), the maximum value of dissipation $\alpha_{\max}$ is attained for $C_c \to \infty$, namely, when the qubit becomes wire coupled to the transmission line (see Fig. 1). In that case, charge quantization is lost and the transformed charge-boson Hamiltonian (4) becomes equivalent to the boundary sine-Gordon model [51], because the phase $\hat{\varphi}$ obviously freezes out, leaving the cosine potential as a boundary effect on the bosonic modes. We emphasize that the resulting Schmid transition [52] has a different universality to the spin-boson transition that we study, and is not relevant for the case of finite C_c considered here.

The constraint (5) has profound consequences for the dissipative quantum mechanics of realistic charge qubits. Indeed, reaching the ultrastrong coupling regime $\alpha \simeq 1$ where many-body effects are most prominent implies $E_c \simeq \omega_c$. For Cooper pair boxes with $E_J \ll E_c$, the first excited qubit state lies at energy $E_J \ll \omega_c$, well within the linear regime of $J(\omega)$, so that Ohmic dissipation controls the qubit dynamics, allowing the Ohmic spin-boson transition [16]. In the other extreme regime $E_J \gg E_c$, the first qubit excitation located at $\sqrt{8E_cE_J} \gg \omega_c$ now lies in the tails of the cutoff function $J(\omega)$. This suggests that the Ohmic spin-boson quantum phase transition is not possible for a capacitively coupled transmon qubit, shedding light on previous experimental attempts [18,19], and extending predictions for systems of transmons coupled to single cavities [53–55]. Establishing at which value of E_J/E_c the phase transition becomes forbidden in the full charge-boson model is very important to guide experimental endeavors on superconducting simulators, and requires a full-fledged many-body solution of the problem. For this purpose, we first need to uncover the order parameter controlling the quantum phase transition in the charge-boson model. Because of the periodicity of charge quantization, we can restrict $n_g \in [0, 1]$. We notice that, for $n_g = 1/2$, Hamiltonian (2) is invariant by the symmetry: $a_k^\dagger \to -a_k^\dagger$ and $\hat{n} \to 1 - \hat{n}$. If the ground state of Hamiltonian (2) preserves this symmetry, we get $\langle \hat{n} \rangle = \langle 1 - \hat{n} \rangle$, so that $\langle \hat{n} \rangle = 1/2$, namely, $\langle \hat{n} - n_g \rangle = 0$. On the contrary, if the symmetry is spontaneously broken, $\langle \hat{n} - n_g \rangle \neq 0$ serves as an order parameter. This is physically expected because the linear coupling term $(\hat{n} - n_g)\sum_k ig_k(\hat{a}_k^\dagger - \hat{a}_k)$ in Eq. (2) tends to induce a finite charge polarization $\hat{n} - n_g$.

Computing the order parameter $\langle \hat{n} - n_g \rangle$ can only be achieved by reliable quantum many-body simulations of the charge-boson Hamiltonian (2). Taking advantage of the impurity structure of the problem, we have extended the NRG [56] to dissipative Josephson junctions, in contrast to previous treatments of the spin-boson model based on the two-level system approximation [57]. The method is based on an iterative diagonalization, adding modes one by one on a logarithmic grid, with a truncation of the Hilbert space at each NRG step. For the charge-boson model (2), the first stage of the NRG starts with the qubit degree of freedom, expressed in the charge basis, with up to 10^3 charge states to ensure proper convergence for all considered E_J/E_c values. We work with the Ohmic model $J(\omega) = 2\pi\alpha\omega \exp(-\omega/\omega_c)$ in units of $\omega_c = 1$, and start the NRG procedure with frequencies of order $10\omega_c$ down to the minimal frequency $10^{-14}\omega_c$ that guarantees convergence of the NRG to the full many-body ground state.

Our first important finding concerns the dissipation-induced quantum phase transition of the charge-boson Hamiltonian (2), beyond the two-level approximation. Figure 2(a) shows the ground state order parameter $\langle \hat{n} - n_g \rangle$ as a function of normalized dissipation $\alpha/\alpha_{\max}$, which always stays zero when $E_J > E_c$. However, Cooper pair box qubits with $E_c \gg E_J$ do show a transition. This scenario is confirmed by monitoring the enhanced quantum fluctuations in the symmetric phase, from the charge response function $\chi(t) = \langle (\hat{n}(t) - n_g)(\hat{n}(0) - n_g) \rangle$ of the qubit. A peak in the frequency domain occurs at the scale $\omega_{\mathrm{qb}}^\star$, associated to the renormalized frequency of the qubit. Extracting $\omega_{\mathrm{qb}}^\star$ for various parameter values, we see in Fig. 2(b) that $\omega_{\mathrm{qb}}^\star$ vanishes exponentially fast at the quantum critial point. Drawing the resulting phase diagram in the $(\alpha, E_J/E_c)$ plane (here $E_J/\omega_c = 0.1$ is fixed), we find in Fig. 2(c) that the transition point between the two phases simply disappears when E_J/E_c is increased (cross), due to the border to the electrostatically forbidden region. Reporting the boundary $(E_J/E_c)_{\max}$ in the $(E_J/E_c, E_J/\omega_c)$ plane, we obtain a completely general phase diagram in Fig. 2(d). We thus established that the regime $E_J/E_c \gtrsim 1$ always forbids quantum criticality, so that the spin-boson paradigm does not apply for multilevel charge qubits, including transmons ($E_J \gg E_c$).

In the absence of a quantum phase transition, one may be tempted to conclude that the multilevel regime of dissipative qubits is trivial. On the contrary, it presents interesting many-body physics that we explore in the rest of this Letter. We investigate zero point fluctuations of the superconducting phase given by the average tunneling $\langle \cos(\hat{\varphi}) \rangle$ in the many-body ground state. For transmons ($E_J \gg E_c$),

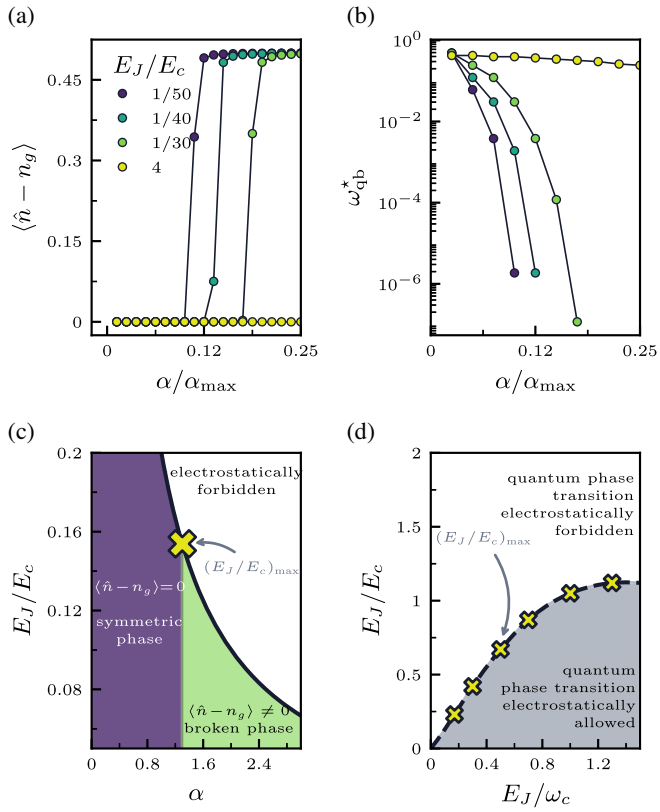

FIG. 2. (a) Order parameter $\langle \hat{n} - n_g \rangle$ as a function of dissipation α (normalized to $\alpha_{\max}$) for four values of E_J/E_c, obtained at fixed $E_J/\omega_c = 0.1$ and at the degeneracy point $n_g = 1/2$. A quantum phase transition is only obtained if $E_J/E_c \ll 1$. (b) Renormalized qubit frequency $\omega^\star_{\rm qb}$ for the same parameters, which vanishes at the same critical point. (c) Phase diagram of the charge-boson model showing the phase boundary and the electrostatic forbidden regime ($E_J/\omega_c = 0.1$ is fixed). (d) General phase diagram for arbitrary E_J/E_c and E_J/ω_c, showing regimes where a spin-boson quantum phase transition for multilevel qubits is ruled out.

$\langle \cos(\hat{\varphi}) \rangle$ increases with dissipation α, because the phase is damped by its environment towards the minimum $\hat{\varphi} = 0$ of the Josephson potential (this behavior is not captured by a two-level approximation [50]). In contrast, for a Cooper pair box ($E_c \gg E_J$) at the charge offset $n_g = 1/2$, $\langle \cos(\hat{\varphi}) \rangle$ decreases with dissipation because charge fluctuations between $n = 0$ and $n = 1$ tend to freeze, so that, due to the Heisenberg principle, the phase delocalizes. This regime is strongly n_g sensitive, since for $n_g = 0$ the charge is already frozen in absence of dissipation. Both behaviors are clearly evidenced in Fig. 3, which shows $\langle \cos(\hat{\varphi}) \rangle$ against E_J/E_c, for several values of the normalized dissipation strength $\alpha/\alpha_{\max}$ at $n_g = 0.5$ (dots are results from NRG simulations). Remarkably, the crossover is characterized by quantum fluctuations of the superconducting phase that are nearly dissipation insensitive as seen by the narrowing spread of the points at $E_J = E_c$. This striking behavior is a manifestation of the frustrated nature of the

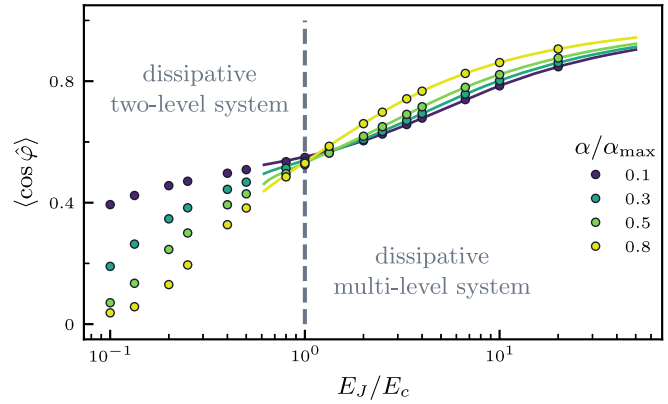

FIG. 3. Josephson tunneling $\langle \cos(\hat{\varphi}) \rangle$ in the ground state of the charge-boson model, comparing full NRG simulation (dots) with the simple ansatz (7) (lines), computed as a function of E_J/E_c for offset charge $n_g = 1/2$ and several values of the normalized dissipation strength $\alpha/\alpha_{\max}$. Dissipation tends to localize the phase for multi-level charge qubits ($E_J > E_c$), namely $\langle \cos(\hat{\varphi}) \rangle$ increases with α, while conversely phase delocalizes for two-level qubits ($E_J < E_c$). Surprisingly, zero point fluctuations are nearly dissipation insensitive in the crossover regime $E_J \simeq E_c$.

qubit pointer states, that are neither purely phaselike nor purely chargelike in the crossover from multilevel to two-level qubits.

In order to capture physically these effects related to discrete charge, we finally develop a new description of dissipative multilevel qubits, since current polaronic theory [58,59] applies mainly to the two-level regime. Obviously, dissipation tends to localize the phase in the multi-level regime, so that the wave function stays mostly trapped at the minima of the cosine Josephson potential. For $\varphi^2 \ll 1$, the self-consistent harmonic approximation (SCHA) [13,60,61] replaces the cosine potential in Eq. (2) by a harmonic term

$$\hat{H}_{\rm SCHA} = \sum_k \omega_k \hat{a}_k^\dagger \hat{a}_k + \hat{n} \sum_k i g_k (\hat{a}_k^\dagger - \hat{a}_k) + 4E_c \hat{n}^2 + \frac{E_J^\star}{2} \hat{\varphi}^2, \tag{6}$$

which is nothing but the Caldera-Leggett model of a damped harmonic oscillator with renormalized Josephson energy $E_J^\star$. However, charge discreteness has to be taken into account via the compactness of the phase $\varphi \in [0, 2\pi]$, which can be restored [62,63] by periodizing the vacuum of $\hat{H}_{\rm SCHA}$ (denoted $|0\rangle_{\rm SCHA}$):

$$|0_{\circlearrowleft}\rangle = \sum_{w \in \mathbb{Z}} e^{i2\pi w \hat{n}} e^{-i n_g \hat{\varphi}} |0\rangle_{\rm SCHA}, \tag{7}$$

including a gate offset n_g associated to the Aharonov-Casher interference [64]. After diagonalizing the linear Hamiltonian (6) in eigenmodes $b_\mu^\dagger$, $\hat{H}_{\rm SCHA} = \sum_\mu \Omega_\mu (\hat{b}_\mu^\dagger \hat{b}_\mu + 1/2)$, the qubit operators read $\hat{n} = i \sum_\mu v_\mu (b_\mu^\dagger - b_\mu)$ and

$\hat{\varphi} = \sum_\mu u_\mu (b_\mu^\dagger + b_\mu)$ [50]. Using $E_J^\star$ as variational parameter, we estimate the ground state energy of Hamiltonian (2), and obtain analytically the tunneling

$$\langle \cos(\hat{\varphi}) \rangle = \sum_{w \in \mathbb{Z}} \left[\frac{(\pi w)^2}{2} + (-1)^w e^{-\frac{u^2}{2}} \right] e^{-2(\pi w)^2 v^2 - i 2\pi w n_g}, \quad (8)$$

where $u^2 \equiv \sum_\mu u_\mu^2$, $v^2 \equiv \sum_\mu v_\mu^2$. The lines in Fig. 3 compare the full NRG simulations to the simple formula (8) in the range $E_J/E_c > 1/2$, with excellent agreement. The crossover from the multilevel to two-level regime results from a competition between two clear physical effects: (i) the Franck-Condon term $e^{-2\pi^2 v^2 w^2}$ associated with the winding number w dual to the qubit charge n, weighting the overlaps between wells; (ii) the Aharonov-Casher phase $e^{-i2\pi w n_g}$ associated with the gate charge n_g, driving interferences between wells.

In conclusion, we have demonstrated that realistic superconducting qubits do not show the same dissipative properties predicted from models based on the two-level approximation. We also provided a new physical picture of the many-body wave function for dissipative multilevel qubits, based on charge discreteness. Regarding experimental attempts at simulating quantum spins with superconducting circuits, we found that reaching the spin-boson quantum phase transition requires very strong non-linearities, well beyond the transmon regime. Similar considerations could apply to a wide class of model Hamiltonians that are touted as candidates for quantum simulators [10,13,41,65].

K. K. and S. B. would like to thank IRCC, IITB for funding. S. B. acknowledges support from SERB-DST, India, through Ramanujan Fellowship No. SB/S2/RJN-128/2016, Early Career Research Award No. ECR/2018/000876, Matrics No. MTR/2019/000566, and MPG through the Max Planck Partner Group at IITB. S. F. thanks the hospitality of IITB and Wits University, and acknowledges funding by PICS contract FermiCats.

[1] S. McArdle, S. Endo, A. Aspuru-Guzik, S. C. Benjamin, and X. Yuan, Rev. Mod. Phys. **92**, 015003 (2020).
[2] A. Montanaro, npj Quantum Inf. **2**, 15023 (2016).
[3] R. Feynman, Int. J. Theor. Phys. **21**, 467 (1982).
[4] T. D. Ladd, F. Jelezko, R. Laflamme, Y. Nakamura, C. Monroe, and J. L. O'Brien, Nature (London) **464**, 45 (2010).
[5] I. M. Georgescu, S. Ashhab, and F. Nori, Rev. Mod. Phys. **86**, 153 (2014).
[6] L. Kouwenhoven and L. Glazman, Phys. World **14**, 33 (2001).
[7] I. Bloch, J. Dalibard, and W. Zwerger, Rev. Mod. Phys. **80**, 885 (2008).
[8] A. A. Houck, H. E. Türeci, and J. Koch, Nat. Phys. **8**, 292 (2012).
[9] J. Raftery, D. Sadri, S. Schmidt, H. E. Tureci, and A. A. Houck, Phys. Rev. X **4**, 031043 (2014).
[10] P. Forn-Díaz, J. J. Garcia-Ripoll, B. Peropadre, J. L. Orgiazzi, M. A. Yurtalan, R. Belyansky, C. M. Wilson, and A. Lupaşcu, Nat. Phys. **13**, 39 (2017).
[11] P. Roushan *et al.*, Science **358**, 1175 (2017).
[12] R. Ma, B. Saxberg, C. Owens, N. Leung, Y. Lu, J. Simon, and D. I. Schuster, Nature (London) **566**, 51 (2019).
[13] S. Leger, J. P. Martinez, K. Bharadwaj, R. Dassonneville, J. Delaforce, F. Foroughi, V. Milchakov, L. Planat, O. Buisson, C. Naud, W. Hasch-Guichard, S. Florens, I. Snyman, and N. Roch, Nat. Commun. **10**, 5259 (2019).
[14] I. Carusotto, A. A. Houck, A. J. Kollár, P. Roushan, D. I. Schuster, and J. Simon, Nat. Phys. **16**, 268 (2020).
[15] R. P. Feynman, R. B. Leighton, and M. Sands, *The Feynman Lectures on Physics*; New Millennium ed. (Basic Books, New York, NY, 2010).
[16] A. J. Leggett, S. Chakravarty, A. T. Dorsey, M. P. A. Fisher, A. Garg, and W. Zwerger, Rev. Mod. Phys. **59**, 1 (1987).
[17] U. Weiss, *Quantum Dissipative Systems* (World Scientific, Singapore, 1992).
[18] J. P. Martinez, S. Leger, N. Gheeraert, R. Dassonneville, L. Planat, F. Foroughi, Y. Krupko, O. Buisson, C. Naud, W. Hasch-Guichard, S. Florens, I. Snyman, and N. Roch, npj Quantum Inf. **5**, 19 (2019).
[19] R. Kuzmin, N. Mehta, N. Grabon, R. Mencia, and V. E. Manucharyan, npj Quantum Inf. **5**, 1 (2019).
[20] D. K. Weiss, A. C. Y. Li, D. G. Ferguson, and J. Koch, Phys. Rev. B **100**, 224507 (2019).
[21] A. Di Paolo, T. E. Baker, A. Foley, D. Sénéchal, and A. Blais, npj Quantum Inf. **7**, 11 (2021).
[22] A. L. Grimsmo, B. Royer, J. M. Kreikebaum, Y. Ye, K. O'Brien, I. Siddiqi, and A. Blais, Phys. Rev. Applied **15**, 034074 (2021).
[23] M. Kjaergaard, M. E. Schwartz, J. Braumller, P. Krantz, J. I.-J. Wang, S. Gustavsson, and W. D. Oliver, Annu. Rev. Condens. Matter Phys. **11**, 369 (2020).
[24] P. Cedraschi, V. V. Ponomarenko, and M. Büttiker, Phys. Rev. Lett. **84**, 346 (2000).
[25] A. Furusaki and K. A. Matveev, Phys. Rev. Lett. **88**, 226404 (2002).
[26] K. Le Hur and M.-R. Li, Phys. Rev. B **72**, 073305 (2005).
[27] K. Le Hur, Phys. Rev. Lett. **92**, 196804 (2004).
[28] M.-R. Li, K. Le Hur, and W. Hofstetter, Phys. Rev. Lett. **95**, 086406 (2005).
[29] A. Recati, P. O. Fedichev, W. Zwerger, J. von Delft, and P. Zoller, Phys. Rev. Lett. **94**, 040404 (2005).
[30] R. Lescanne, L. Verney, Q. Ficheux, M. H. Devoret, B. Huard, M. Mirrahimi, and Z. Leghtas, Phys. Rev. Applied **11**, 014030 (2019).
[31] S. E. Nigg, H. Paik, B. Vlastakis, G. Kirchmair, S. Shankar, L. Frunzio, M. H. Devoret, R. J. Schoelkopf, and S. M. Girvin, Phys. Rev. Lett. **108**, 240502 (2012).
[32] J. J. Garcia-Ripoll, B. Peropadre, and S. De Liberato, Sci. Rep. **5**, 16055 (2015).
[33] M. Malekakhlagh, A. Petrescu, and H. E. Türeci, Phys. Rev. Lett. **119**, 073601 (2017).
[34] A. Parra-Rodriguez, E. Rico, E. Solano, and I. L. Egusquiza, Quantum Sci. Technol. **3**, 024012 (2018).

[35] P. Forn-Díaz, L. Lamata, E. Rico, J. Kono, and E. Solano, Rev. Mod. Phys. **91**, 025005 (2019).
[36] A. F. Kockum, A. Miranowicz, S. De Liberato, S. Savasta, and F. Nori, Nat. Rev. Phys. **1**, 19 (2019).
[37] A. Le Boité, Adv. Quantum Technol. **3**, 1900140 (2020).
[38] J. Koch, T. M. Yu, J. Gambetta, A. A. Houck, D. I. Schuster, J. Majer, A. Blais, M. H. Devoret, S. M. Girvin, and R. J. Schoelkopf, Phys. Rev. A **76**, 042319 (2007).
[39] L. I. Glazman and A. I. Larkin, Phys. Rev. Lett. **79**, 3736 (1997).
[40] D. M. Basko, F. Pfeiffer, P. Adamus, M. Holzmann, and F. W. J. Hekking, Phys. Rev. B **101**, 024518 (2020).
[41] A. Roy, D. Schuricht, J. Hauschild, F. Pollmann, and H. Saleur, Nucl. Phys. **B968**, 115445 (2021).
[42] K. Kaur *et al.* (to be published).
[43] K. Le Hur, Phys. Rev. B **85**, 140506(R) (2012).
[44] M. Goldstein, M. H. Devoret, M. Houzet, and L. I. Glazman, Phys. Rev. Lett. **110**, 017002 (2013).
[45] B. Peropadre, D. Zueco, D. Porras, and J. J. Garcia-Ripoll, Phys. Rev. Lett. **111**, 243602 (2013).
[46] I. Snyman and S. Florens, Phys. Rev. B **92**, 085131 (2015).
[47] N. Gheeraert, X. H. H. Zhang, T. Sépulcre, S. Bera, N. Roch, H. U. Baranger, and S. Florens, Phys. Rev. A **98**, 043816 (2018).
[48] L. Magazzù, P. Forn-Díaz, R. Belyansky, J.-L. Orgiazzi, M. A. Yurtalan, M. R. Otto, A. Lupascu, C. M. Wilson, and M. Grifoni, Nat. Commun. **9**, 1403 (2018).
[49] U. Vool and M. H. Devoret, Int. J. Circuit Theory Appl. **45**, 897 (2017).
[50] See Supplemental Material at http://link.aps.org/supplemental/10.1103/PhysRevLett.127.237702 for details.
[51] W. Zwerger, A. T. Dorsey, and M. P. A. Fisher, Phys. Rev. B **34**, 6518 (1986).
[52] G. Schön and A. D. Zaikin, Phys. Rep. **198**, 237 (1990).
[53] S. J. Bosman, M. F. Gely, V. Singh, D. Bothner, A. Castellanos-Gomez, and G. A. Steele, Phys. Rev. B **95**, 224515 (2017).
[54] T. Jaako, Z.-L. Xiang, J. J. Garcia-Ripoll, and P. Rabl, Phys. Rev. A **94**, 033850 (2016).
[55] P. Nataf and C. Ciuti, Nat. Commun. **1**, 72 (2010).
[56] R. Bulla, T. A. Costi, and T. Pruschke, Rev. Mod. Phys. **80**, 395 (2008).
[57] R. Bulla, N.-H. Tong, and M. Vojta, Phys. Rev. Lett. **91**, 170601 (2003).
[58] R. Silbey and R. A. Harris, J. Chem. Phys. **80**, 2615 (1984).
[59] S. Bera, S. Florens, H. U. Baranger, N. Roch, A. Nazir, and A. W. Chin, Phys. Rev. B **89**, 121108(R) (2014).
[60] A. D. Zaikin and S. V. Panyukov, JETP Lett. **43**, 670 (1986).
[61] T. Giamarchi, *Quantum Physics in One Dimension* (Oxford University Press, New York, 2003).
[62] A. Mizel and Y. Yanay, Phys. Rev. B **102**, 014512 (2020).
[63] J. Bender, P. Emonts, E. Zohar, and J. I. Cirac, Phys. Rev. Research **2**, 043145 (2020).
[64] M. T. Bell, W. Zhang, L. B. Ioffe, and M. E. Gershenson, Phys. Rev. Lett. **116**, 107002 (2016).
[65] A. Murani, N. Bourlet, H. le Sueur, F. Portier, C. Altimiras, D. Esteve, H. Grabert, J. Stockburger, J. Ankerhold, and P. Joyez, Phys. Rev. X **10**, 021003 (2020).