HAL open science

Glacier forelands reveal fundamental plant and microbial controls on short-term ecosystem N retention

Franciska Vries, Cécile Thion, Michael Bahn, Benoît Bergk Pinto, Sébastien Cécillon, Beat Frey, Helen Grant, Graeme W. Nicol, Wolfgang Wanek, James Prosser, et al.

To cite this version:

Franciska Vries, Cécile Thion, Michael Bahn, Benoît Bergk Pinto, Sébastien Cécillon, et al.. Glacier forelands reveal fundamental plant and microbial controls on short-term ecosystem N retention. Journal of Ecology, 2021, 109 (10), pp.3710-3723. 10.1111/1365-2745.13748 . hal-03411964

HAL Id: hal-03411964

https://hal.science/hal-03411964v1

Submitted on 3 Nov 2021

HAL is a multi-disciplinary open access archive for the deposit and dissemination of scientific research documents, whether they are published or not. The documents may come from teaching and research institutions in France or abroad, or from public or private research centers.

L'archive ouverte pluridisciplinaire **HAL**, est destinée au dépôt et à la diffusion de documents scientifiques de niveau recherche, publiés ou non, émanant des établissements d'enseignement et de recherche français ou étrangers, des laboratoires publics ou privés.

Glacier forelands reveal fundamental plant and microbial controls on ecosystem N retention

Franciska T. de Vries[1,2*], Cécile Thion[3,4], Michael Bahn[5], Benoît Bergk Pinto[4], Sébastien Cécillon[4], Beat Frey[5], Helen Grant[6], Graeme W. Nicol[4], Wolfgang Wanek[7], James I. Prosser[3], and Richard D. Bardgett[2]

[1]Institute for Biodiversity and Ecosystem Dynamics, University of Amsterdam, 1090 GE Amsterdam, the Netherlands

[2]School of Earth and Environmental Sciences, Michael Smith Building, The University of Manchester, Oxford Road, Manchester, M13 9PT, United Kingdom

[3]School of Biological Sciences, University of Aberdeen, Cruickshank Building, St Machar Drive, Aberdeen, AB24 3UU, United Kingdom

[4]Laboratoire Ampère, École Centrale de Lyon, Université de Lyon, 36 Avenue Guy de Collongue 69134 Ecully, France

[5]Department of Ecology, University of Innsbruck, Innsbruck, Austria

[5]Rhizosphere Processes Group, Swiss Federal Research Institute WSL, 8903 Birmensdorf, Switzerland

[6]UK Centre for Ecology and Hydrology, Lancaster, LA1 4AP, United Kingdom

[7]Center of Microbiology and Environmental Systems Science, Department of Microbiology and Ecosystem Science, University of Vienna, 1090 Vienna, Austria

*Corresponding author: f.t.devries@uva.nl

Author contributions: FTdV, RDB, CT, and JIP conceived the study. FTdV, RDB, WW, BF, MB planned and performed field work. FTdV, CT, and HG performed laboratory analyses. FTdV, CT, BBP, SC, GWN, analysed data, and FTdV, CT, JIP, and RdB wrote the manuscript with significant inputs from all authors.

Competing Interest Statement: There are no competing interests.

Classification: Biological Sciences/Ecology; Physical Sciences/Environmental Sciences

Keywords: nitrogen, carbon, plant-soil interactions, soil microbial community, global change, nitrogen deposition, glacier foreland, succession

Abstract

The retention of nitrogen (N) is a crucial ecosystem function of both managed and natural ecosystems, and there is a long history of experimental, observational, and conceptual studies identifying its major controls. Yet, the plant and soil microbial controls on the retention of added N remain elusive. Here, we used three ecosystem chronosequences in front of retreating Alpine glaciers to test our hypothesis that the retention of reactive N increases with succession, and to identify the plant and microbial controls of ecosystem N retention. We found that the uptake and retention of N was not affected by succession, despite consistent changes in plant, soil, and microbial properties with increasing time since deglaciation. Instead, we found that plant and microbial properties that did not change with succession controlled ^{15}N uptake and retention: low root and microbial C/N ratios, as well as high root biomass, increased plant and microbial uptake of added N. In addition, high soil concentrations of nitrate and ammonium reduced the uptake of N in microbes and roots, respectively. These results indicate that plant and microbial N demand, as well as N limitation, are driving ecosystem N retention in glacier forelands. Our findings advance our understanding of the fundamental controls on ecosystem N retention and the role of plant-microbial interactions in this process. This understanding is crucial for predicting and mitigating the response of terrestrial ecosystems to the ever-increasing amounts of reactive N in the biosphere.

Significance statement

Human activities have massively increased the amount of reactive nitrogen in the biosphere, which is leading to increased N inputs in terrestrial ecosystems. This excess N can affect plant and soil communities and reduce their diversity, affect the functioning of ecosystems, and exacerbate climate change. The retention of N is an important ecosystem function, yet we have little understanding of the role of plants and soil microbes in this process. We show that plants and soil microbes together take up a significant part of added N, and that this uptake is determined by their N demand and by the availability of soil N. These findings might help predict and mitigate the effects of N enrichment of the terrestrial biosphere.

Introduction

Nitrogen (N) retention is a fundamental and important ecosystem function, particularly in the face of global nitrogen enrichment. The ability of terrestrial ecosystems to retain reactive N is an indicator of the extent to which they are N-limited, as well as being a key property of natural and managed ecosystems, where it regulates N losses that cause eutrophication of aquatic ecosystems and exacerbate climate change (1). Ecosystem N retention and its counterpart N loss are regulated by both abiotic factors, such as parent material and climate, and biotic factors, such as plant and soil microbial properties (2). While many empirical and theoretical studies have examined the role of plant and soil properties, and their nutrient stoichiometry, in regulating ecosystem N retention, our understanding of the underpinning mechanisms remains elusive. In particular, despite widespread acknowledgement of the importance of soil microbes in immobilising reactive N and reducing ecosystem N leaching losses, it is still unresolved which soil microbial community attributes are responsible for regulating ecosystem N retention, and how these are linked to plant communities and soil physicochemical properties (3).

Early studies on terrestrial ecosystem N retention demonstrated that old-growth forests have much larger N-leaching losses than early-successional forests (4). This work led to the classic conceptual model of Vitousek and Reiners, who proposed that actively growing plants in early to mid-successional ecosystems have high rates of N uptake, and, as such, these systems have high N retention (4). In contrast, late-successional systems, with slower plant growth and biomass accumulation dominated by mature trees or plant communities consisting of slow-growing species, are more 'leaky' of N. However, many observational studies do not support this classic model (3, 5). Recent work for instance has shown that ecosystems can differ strongly in their retention of reactive N and that soil, litter, and microbial biomass pools retain more N than aboveground plant biomass, and are thus more important controls on ecosystem N retention than plant N uptake (2). In particular, the accumulation of soil organic matter and higher C/N ratios of soil and litter have been linked to greater ecosystem N retention through increased microbial N immobilisation (3, 5, 6), although the microbial community attributes associated with these changes are poorly understood.

Recent studies have demonstrated the importance of interactions between plants and soil microbial communities in determining ecosystem N retention. For example, field studies in temperate grasslands show that N retention is greatest, and N leaching losses lowest, in grasslands characterised by plant communities dominated by slow-growing, nutrient-conservative species, and soil microbial communities dominated by fungi (7-10). The general mechanism underpinning this observation is that soils with low N availability select for N-

conservative plant species and fungal-dominated microbial communities (11), which compete for and immobilise significant amounts of N, thereby enhancing N retention (7). Moreover, N-conservative plant species and fungi have slower growth and lower turnover rates than fast-growing plants and bacteria, and thus the N taken up in their tissues is retained for longer, again reducing the availability and mineralisation of N in the soil (7). In contrast, controlled common garden experiments have shown that fast-growing plant species and bacteria-dominated microbial communities have the highest N uptake and retention (12-14), potentially indicating that different mechanisms might underlie ecosystem N retention under controlled conditions compared to field conditions. In particular, under field conditions, other factors than plant and microbial N uptake rates might explain ecosystem N retention, such as high soil C stocks and soil C/N ratios (15), with reduced availability of N for plant and microbial uptake. Under such conditions, plants might employ other strategies to acquire their nitrogen, for example reducing the availability of N by releasing polyphenols, and by taking up organic N forms directly or through associations with mycorrhizal fungi (16, 17). Thus, the factors affecting ecosystem N retention are complex and highly interlinked, which complicates identifying the plant and microbial properties that underlie increased ecosystem N retention in the real world.

Glacier forelands are excellent model systems for studying how fundamental ecological processes change during ecosystem succession, and studies on these systems have led to major advances in our understanding of the role of plant-soil interactions in ecosystem development (18-20). As glaciers retreat, they expose barren parent material, which is then colonised by microbes and plants and undergoes primary succession, thus creating a successional gradient with increasing distance from the glacier front. These space-for-time substitutions show predictable changes with increasing distance from the glacier forefront: plant and soil microbial biomass increase, soil organic C and N accumulate, and microbial communities become more dominated by fungi (21-23). In line with the increase in soil C and N with age since deglaciation, the abundance of N-cycling genes related to the decomposition of organic material (24) and ammonia oxidation (25) increases, while that of genes involved in denitrification decreases (25, 26). Moreover, while vegetation in the early stages of glacier foreland sites is limited by N and in later stages by P (18), findings on nutrient limitation of soil microbes are inconsistent, and seem to depend on variations in soil properties within and between glacier forelands (27-29). Thus, these systems provide a unique opportunity to study how ecosystem N retention changes during primary succession, while at the same time displaying enough variation within successional stages to identify the major plant and microbial controls of ecosystem N uptake and retention (20, 30).

Here, we aimed to identify the fundamental plant and microbial controls on ecosystem N uptake and retention using three distinct glacier forelands in the European Alps as model systems. We hypothesised that ecosystem N retention increases with ecosystem succession as a result of increased abundance of slow-growing, N conservative plants which associate with fungal-dominated soil microbial communities, and the build-up of soil organic matter. Specifically, we hypothesised that plant communities dominated by N-conservative species would select for N-conservative microbial communities, which, together with an increase in soil C/N ratio, would increase microbial immobilisation of N and decrease N leaching losses. We also identified changes in taxonomic and functional microbial community composition associated with this hypothesised increase in microbial N immobilisation. In particular, we assessed changes in the abundance of soil fungi, bacteria and ammonia-oxidising archaea and bacteria, which play a key role in nitrification. This was achieved by collecting intact soil cores from five locations in each of five successional stages (16, 38, 60, 112, and 157 years old) and one reference site (deglaciated around 2,000 years ago) in three well-documented, geographically distinct glacier forelands in the European Alps: the Damma Glacier in Switzerland (21), and the Ödenwinkelkees and Rotmoosferner glaciers in Austria (31) (see Fig. S1 for an overview of sampling scheme, sites, and site characteristics). A stable isotope approach was used to trace the fate and retention of added N in these intact soil cores: we added the equivalent of 20 kg N ha^{-1} (as a 0.05 M $^{15}NH_4{}^{15}NO_3$ solution) to each core and assessed the effect of soil age on the uptake and retention of ^{15}N in soil, roots, shoots, and microbial biomass and the amount leached after a simulated rainfall event (30 mm) 48 h after ^{15}N addition (7). Detailed analyses of soil, vegetation, and microbial community properties of paired soil samples were used to explain ecosystem N uptake and retention (i.e. the total amount of ^{15}N retained in soil, plant, and microbial pools after a rainfall event) across glaciers and soil age. This approach enabled us to identify the fundamental plant and microbial drivers of ecosystem N retention, and how these change with ecosystem succession in glacier forelands.

Results

Soil and plant properties

Measured soil properties changed predictably across the three glacier forelands. Soil pH decreased with soil age, while total soil C and N stocks and dissolved organic C (DOC) concentration increased (Table 1, Table S1). In contrast, soil C/N ratio and the availability of inorganic (NH_4^+ and NO_3^-) and organic (DON) N forms did not change significantly with soil age. Of the plant properties measured, only root N increased significantly with soil age. Other than soil pH, which was overall lowest in the Damma and highest in the Rotmoosferner glacier

174 foreland, none of the soil and plant properties differed between the three glacier forelands
175 (Table 1, Table S1, S2).
176
177 Microbial communities
178 Microbial community properties showed strong and consistent changes across primary
179 succession gradients. Microbial biomass C and N, the total amount of soil DNA, bacterial (16S
180 rRNA), fungal (18S rRNA), and ammonia-oxidising archaea (AOA) gene abundances (assessed
181 using qPCR) all increased with soil age (Table 1, Table S3, S4). While the fungal-to-bacterial
182 gene abundance ratio did not change, the ratio of ammonia-oxidising archaea to ammonia-
183 oxidising bacteria (AOB) increased with soil age. In addition to measuring changes in gene
184 abundance, we used amplicon sequencing of the 16S rRNA gene to assess taxonomic changes in
185 bacterial community composition, and used the resulting taxonomic assignments to predict
186 abundances of bacterial traits and assess changes in bacterial functional community
187 composition, using the beta version of the R package Tax4Fun (32). In contrast to the absolute
188 abundance of AOA genes, predicted relative abundances of ammonia-oxidising and ammonia-
189 transporter genes did not increase with soil age (Fig. S2). Predicted relative abundances of
190 genes associated with free-living and symbiotic N-fixation genes and chitin degradation
191 increased with soil age (Fig. S2). Because our qPCR analysis of AOB gene abundances (see
192 Methods) resulted in many missing values, and because AOB gene abundances were positively
193 correlated with predicted ammonia-oxidising gene abundances and negatively correlated with
194 ammonia-transporter gene abundance ($P < 0.0001$ and R-squared = 0.316, and $P = 0.018$ and R-
195 squared = 0.119, respectively, Fig. S3), we used these predicted gene abundances for our follow-
196 up models (see Methods).
197
198 Both taxonomic and functional bacterial community composition changed with soil age and
199 patterns were similar across the three glaciers (Fig. 1). We compared the variance explained in
200 taxonomic and functional community composition through running a PCA on arcsine-
201 transformed relative abundances of bacterial OTUs and KEGG orthologs. The first two axes of PCA
202 for functional community composition explained more variance than those for taxonomic
203 community composition – 46.5% vs. 13.8% – and soil age, glacier, and their interaction all
204 explained more variance in functional community composition than in taxonomic community
205 composition (Fig. 1). The PCA of functional community composition clearly discriminated young
206 soils from the oldest for both Damma and Ödenwinkelkees glaciers. The functional profile also
207 changed with soil age in the Rotmoosferner glacier foreland, but here discrimination was less
208 marked. Damma and Ödenwinkelkees microbial communities followed very similar shifts in
209 taxonomic composition with soil age, converging to similar structures in the oldest soils, while

210 the Rotmoosferner community was clearly distinct from the other two glacier forelands (Fig. 1).
211 Despite these clear changes in microbial community structure, neither Shannon diversity nor the
212 Gini coefficient of taxonomic bacterial community composition changed with soil age, and OTU
213 richness increased with soil age only in the Rotmoosferner glacier foreland (Fig. S4). The relative
214 abundance of several phyla changed significantly with soil age (Fig. S5). In particular, the relative
215 abundance of *Proteobacteria* and *Actinobacteria* decreased with soil age, while that of
216 *Acidobacteria*, *Planctomycetes*, *Verrucomicrobia* and *Chloroflexi* increased.
217
218 ^{15}N uptake, retention, and leaching
219 Roots and microbial biomass were the ecosystem N pools that took up and retained the largest
220 amount of added ^{15}N; across all soil ages and glaciers they retained on average 0.56 g and 0.62 g
221 ^{15}N m^{-2}, respectively, or 28% and 31% of the ^{15}N added (Fig. 2). These amounts varied strongly
222 across soil age and glacier, though the apparent increase in ^{15}N uptake by roots with soil age
223 was not significant (P = 0.094; Fig. 2). Similarly, microbial ^{15}N uptake and shoot ^{15}N uptake were
224 not affected by soil age, although the latter tended to decrease with soil age (P = 0.079; Fig. 2).
225 On average, 0.13 g, or 6%, of the added ^{15}N leached from the soil with the simulated rainfall
226 event, but the amount of ^{15}N leached did not change with ecosystem succession. As a result,
227 ecosystem ^{15}N retention was not affected by soil age.
228
229 Despite the absence of an effect of soil age on ecosystem ^{15}N uptake and retention, a significant
230 part of the variation in ^{15}N uptake in plant and microbial pools was explained by ecosystem
231 properties that did change with soil age. Microbial ^{15}N uptake increased with a larger microbial
232 biomass N pool and with decreasing microbial C/N ratio (Table 2). In addition, microbial ^{15}N
233 uptake decreased with greater soil nitrate concentrations. The model for shoot ^{15}N uptake
234 explained more variation than the model for microbial ^{15}N uptake (40% vs. 28%); shoot ^{15}N
235 uptake increased with a larger shoot N pool and decreased with soil total N. The model for root
236 ^{15}N uptake included more variables and explained the largest amount of variation (48%) of ^{15}N
237 uptake in biotic ecosystem pools. Root ^{15}N uptake increased with higher root C/N ratio and root
238 biomass, but the interaction between the two meant that high root C/N ratios increased root ^{15}N
239 uptake at low root biomass and decreased root ^{15}N uptake at high root biomass (Fig. S6). In
240 addition, root ^{15}N uptake decreased with increasing soil ammonium concentrations. Total
241 ecosystem ^{15}N retention increased with increasing microbial biomass N and was also explained
242 by PC2-axis scores of functional bacterial community composition; this model explained 25% of
243 variation. Finally, 32% of the variation in ^{15}N leaching was explained by a combination of soil
244 C/N ratio and taxonomic and functional bacterial community composition, where leaching
245 increased in soils with increasing soil C/N ratio.

The volume leached from the intact soil cores increased slightly with higher soil moisture content and the amount of ^{15}N leached weakly increased with the volume leached (P = 0.013 and R-squared = 0.068 and P = 0.063 and R-squared = 0.041, respectively; Fig. S7). However, the amount of ^{15}N leached decreased when soil moisture was higher (P = 0.004 and R-squared = 0.095, Fig. S7). The total recovery of ^{15}N in plants, soil, and leachates together was variable and not affected by soil age and glacier, and, in general, did not amount to the full 2 g m^{-2} of ^{15}N added (Fig. S8). The average recovery of added ^{15}N was 78.4 ± 29.9 (mean ± SD) % across all soil ages and glaciers, and therefore, for ^{15}N tracer experiments, relatively complete.

<u>^{15}N enrichment of ecosystem N pools</u>

Similar to total ^{15}N uptake in ecosystem N pools, ^{15}N enrichment (i.e. the percentage of ^{15}N enrichment in each ecosystem N pool, which is independent of the size of the pool) of ecosystem N pools varied little with soil age. Neither microbial, root, nor shoot ^{15}N enrichment changed with successional stage (Fig. S9). In contrast, soil ^{15}N enrichment decreased with soil age across the foreland of all three glaciers. Microbial ^{15}N enrichment increased with decreasing microbial biomass C/N ratio and with a decreasing predicted relative abundance of ammonia oxidisers (Table S5). The model for ^{15}N enrichment of shoot N only explained 8.3% of the variation and showed that shoot ^{15}N enrichment increased with higher root C/N ratio. In contrast, 68% and 69% of variation in root and soil ^{15}N enrichment was explained by the selected models, respectively. ^{15}N enrichment of the root N pool decreased with a larger root N pool size and increasing root biomass. Similar to total root ^{15}N uptake, root ^{15}N enrichment also decreased when soil ammonium concentrations increased. Soil ^{15}N enrichment decreased with an increasing size of the soil N pool.

<u>Direct and indirect controls on plant and microbial ^{15}N uptake and ^{15}N leaching</u>

Structural equation modelling (SEM) is a robust statistical method to test how well experimental data fit a hypothesised causal structure that is based on prior knowledge (33). To test our hypothesis that N-conservative plants (with high tissue C/N ratio) select for N-conservative microbial communities (with high microbial biomass C/N ratio), which would in turn increase microbial immobilisation, we fitted our data to a previously hypothesised and tested SEM (14). Importantly, in a previous common garden experiment, this SEM showed that low microbial biomass C/N ratios increased microbial N immobilisation, which contrasts with our current hypothesis (14). The data fitted this model well and confirmed that plant C/N ratio and root biomass determine plant and microbial ^{15}N uptake and leaching (Fig. 4). Shoot C/N ratio, root C/N ratio, and root biomass were all correlated. Roots with a high tissue C/N ratio

were linked to microbial communities with a high C/N ratio, which, in contrast to our hypothesis, in turn immobilised *less* ^{15}N. In addition, high root biomass increased plant ^{15}N uptake, which decreased ^{15}N leaching. ^{15}N leaching was only controlled by plant ^{15}N uptake, not by microbial ^{15}N immobilisation.

Discussion

Using the forelands of three geographically distinct retreating glaciers in the European Alps as a model system, we were able to disentangle the plant and microbial properties that regulate ecosystem N uptake and retention during ecosystem succession. Many ecosystem properties changed in a predictable way with soil age across the three glaciers but, in contrast to our hypothesis, neither microbial or plant ^{15}N uptake, nor ecosystem ^{15}N retention increased with soil age. However, total ecosystem ^{15}N retention and microbial ^{15}N immobilisation, the second largest sink for added ^{15}N, increased with a greater microbial biomass N pool, which itself increased with soil age across all three glacier forelands. Plant ^{15}N uptake, rather than microbial ^{15}N uptake, decreased the amount of ^{15}N lost via leaching and, in contrast to our expectation, ^{15}N leaching increased with higher soil C/N ratios. Moreover, we found that microbial ^{15}N uptake, a measure of microbial immobilisation of N, was primarily determined by the C/N stoichiometry and biomass of soil microbial communities, with only a minor role for changes in taxonomic or functional composition of bacterial communities.

Both taxonomic and functional bacterial community composition, and many soil microbial community properties known to influence soil N availability, were strongly affected by soil age. The AOA:AOB gene abundance ratio increased with soil age, as previously reported in a salt marsh successional gradient (34), possibly as a consequence of a preference of AOA for acidic soils (35). Of the predicted relative abundances of genes involved in the N cycle, only symbiotic and free-living N fixation increased with soil age, which is in line with legumes being more abundant at late-successional stages (Fig. S1). These findings again indicate increased N limitation with succession (36, but see 37). However, in contrast to our expectation, the ratio of fungi-to-bacteria, which has been shown to increase during ecosystem succession (22), and has been linked to increased microbial N immobilisation (7), did not increase. Moreover, none of these microbial community properties explained microbial ^{15}N immobilisation or the ^{15}N enrichment of microbial biomass. Only the predicted relative abundance of ammonia-oxidisers, which did not change with ecosystem succession, explained microbial ^{15}N enrichment; ^{15}N enrichment of microbial biomass N decreased with an increasing abundance of ammonia-oxidisers, suggesting that their abundance is indicative for microbial communities with low N affinity. While we found a strong correlation between measured AOB gene abundances (which

318 had too many missing values to use in our predictive models) and predicted ammonia-oxidiser
319 abundance, functional gene inference by tools like Tax4Fun that we used here has limited
320 reliability in environmental samples (38). Still, taken together, these findings are in line with
321 our observation that microbial ^{15}N immobilisation and ^{15}N enrichment did not increase during
322 ecosystem succession.
323
324 Rather than taxonomic and functional microbial community properties, whole-community
325 stoichiometry explained microbial uptake and enrichment of ^{15}N, irrespective of glacier foreland
326 and soil age. Microbial ^{15}N uptake increased with a greater microbial biomass N pool and with
327 lower microbial biomass C/N ratio, indicating that microbial communities with high N demand
328 immobilised most added ^{15}N. This finding is consistent with observations in controlled
329 experiments (12, 14), but contradicts field observations that fungal-dominated microbial
330 communities of high C/N ratio immobilise more added N than bacterial-dominated microbial
331 communities of low C/N ratio (7, 39). And while soil C stocks or C/N ratios did not explain
332 microbial ^{15}N immobilisation, microbial ^{15}N immobilisation decreased with increasing soil
333 nitrate concentrations, indicating that N limitation did drive microbial ^{15}N uptake (Table 2). A
334 similar pattern was found for root and shoot ^{15}N uptake. Shoot ^{15}N uptake increased with a
335 larger shoot N pool, and root ^{15}N uptake was highest with high root biomass and decreased with
336 higher soil ammonium concentrations, again indicating that ^{15}N uptake was driven both by N
337 demand and N limitation. This was confirmed by our structural equation model, which showed
338 that across these distinctly different glacier forelands, ecosystem N uptake was determined by
339 plant and microbial N demand. Thus, our results indicate that high microbial N immobilisation
340 by fungal-dominated microbial communities of high C/N ratio (7, 39) are a result of ecosystem
341 N limitation, rather than of an innate high affinity of fungi for N.
342
343 Despite the finding that both plant and microbial ^{15}N uptake were driven by their N demand, we
344 found no evidence for competition between plants and microbes for ^{15}N, as indicated by the lack
345 of a significant negative effect of microbial ^{15}N uptake on plant ^{15}N uptake (Fig. 4). Microbes
346 have been shown to be stronger competitors for N than plant roots in N-limited systems on
347 short time scales (10, 40), and it has been suggested that through selecting for specific soil
348 microbial communities, plants can alter the microbial sink strength for N (41). We did indeed
349 find that high root C/N ratios, indicative of conservative plant nutrient acquisition strategies
350 (Fig. S4), were associated with microbial communities with a high biomass C/N ratio that,
351 however, immobilised less ^{15}N. Still, high root C/N ratios were only linked to reduced root N
352 uptake when root biomass was high, which suggests that when both root and microbial C/N
353 ratios were low, plants might have increased their N uptake through investing more in root

biomass. In alpine, N-limited systems like the glacier forelands studied here, the preferential uptake of different forms of N can alleviate N competition between plants and microbes. This chemical niche partitioning has primarily been found between inorganic and organic N forms, but also between various forms of organic N (amino acids) (10, 40, 42). Our results point to a partitioning of the uptake of inorganic N forms: high soil concentrations of nitrate were associated with lower microbial ^{15}N uptake, while high soil ammonium concentrations were associated with lower root ^{15}N uptake, respectively. This finding suggests that microbes were limited by nitrate and plants by ammonium, thus when more of these forms were present, microbial and root uptake of added ^{15}N was reduced. This is consistent with the knowledge that subalpine grassland plants, especially more conservative species, have higher ammonium than nitrate uptake rates, (43), and suggests coordination between plant and microbial N uptake strategies beyond broad-scale tissue N requirements, as has been found before (44, 45).

As expected, roots and microbes together accounted for the largest proportion of ^{15}N retention. After rapid initial uptake by microbes, N is gradually released through microbial turnover and taken up by roots, while root N is translocated to aboveground biomass (7, 40), and eventually transferred to soil organic matter pools via shoot, root, and microbial turnover (46). Despite these shifts in ecosystem N allocation, the total amount of N retained in plants and microbes has been shown to remain constant for two months after ^{15}N addition, indicating that initial ecosystem N retention is indicative of longer-term N retention (6). The average total amount of ^{15}N retained in our systems was relatively high (73%) compared to N retention in temperate grasslands (2, 7, 47), and comparable to shrubland N retention (2). However, it is important to note that we only collected intact soil cores that included plants, whereas plant cover was sparse during early successional stages. Thus, our method will have resulted in an overestimation of ecosystem N retention per square meter in the field, in particular for the most recently deglaciated soils. Because of the large contribution of plant and microbial ^{15}N uptake to ecosystem N retention, it is therefore plausible that whole-ecosystem N retention increases with succession.

Our study identifies fundamental plant and microbial controls on ecosystem N retention, and establishes that plant and microbial N demand, as well as N limitation, are driving ecosystem N retention in glacier forelands. Importantly, these findings are in line with experimental studies in grasslands and forests, as well as with recent adaptations to Vitousek and Reiners conceptual model of nutrient retention (3-5). While increasing (predicted) abundances of free-living and symbiotic N fixation genes indicated increasing N limitation with soil age, we did not find an increase in N retention with ecosystem succession, likely because the main determinants of

plant and microbial ^{15}N uptake were not affected by soil age. Our findings highlight the importance of plant and microbial N uptake for ecosystem N retention and advance our understanding of the fundamental controls on ecosystem N retention. This understanding is crucial for predicting the effects of increasing atmospheric deposition of reactive N on terrestrial ecosystems, as well as for increasing the retention of N in natural and managed ecosystems.

Materials and Methods

Sample collection

Soil was collected in geographically distinct glacier forelands located in Ödenwinkelkees (Austria, 47°12' E, 12°64' N, 2,060-2,161 m altitude), Rotmoosferner (Austria, 46°83' E, 11°04' N, >2,296 m altitude) and Damma (Switzerland, 46°64' E, 8°46' N, 1,939-2,050 m altitude). Mean annual temperatures are 0.2 ± 0.6 °C, -1.0 ± 0.5 °C and 2.2 ± 0.5 °C and mean annual precipitation 2,258 ± 665 mm, 904 ± 150 mm and 2,400 ± 385 mm for the Ödenwinkelkees and Rotmoosferner (both: mean of 2000-2017), and Damma, respectively. Intact soil cores (6.4 cm diam., 15 cm depth, vegetation intact, bottom covered with mesh) and adjacent vegetation and soil samples ('field soil' hereafter, 15 cm depth) were collected from five transects at each site, at distances from the glacier forefront corresponding to an average time since deglaciation of 16, 38, 60, 112 and 157 years, as well as from plots located in each glacial valley but outside the foreland *sensu stricto*, and deglaciated more than 1,000 year ago (reference soils). This resulted in five replicates for each of five successional sites, plus one reference site for each glacier, i.e. 90 sample units. Soils (not intact cores) were sieved to 4 mm, shipped and stored at 4 °C until further analysis. Intact cores and collected vegetation were immediately shipped and stored under the same conditions (see below) until the start of the ^{15}N addition experiment and vegetation sample processing.

^{15}N addition experiment

After shipping to The University of Manchester, intact cores (with vegetation intact) were placed in controlled growth chambers (Percival USA, 9 °C, which is the average September temperature at the sites, 8 h/16 h day/night cycle, at constant moisture content) in a randomised block design and left to acclimatise for one week. Thereafter 4 x 1 ml of a 0.05 M 98.2% enriched $^{15}NH_4{}^{15}NO_3$ solution was injected in the top 5 cm of each soil core in 4 evenly spaced locations (total of 6.43 mg ^{15}N per core, equivalent to 20 kg N ha^{-1} or 2 g m^{-2}). Forty-eight hours after ^{15}N injection, the cores were leached with 97 ml demineralised water (equivalent to a 30 mm rainfall event). Past work has shown that the amount retained in the system 48 h after ^{15}N addition is a good indicator of longer-term ecosystem N retention (7). After leaching, the

426 cores were dismantled, and soil and aboveground and belowground vegetation were separated,
427 and the volume of leachates recorded.
428
429 Leachate, soil, and vegetation analyses
430 Gravimetric soil moisture contents of core and field soils were determined by drying for 24 h at
431 105 °C, and for the core soils with recorded weight and volume of stones larger than 4 mm, used
432 to determine core bulk density and fine soil (all material <4 mm) content. Leachates and field
433 soil were analysed for dissolved inorganic and organic nitrogen (DON) and dissolved organic C
434 (DOC) as described in De Vries *et al.* (7). Microbial biomass C and N in field soil and column soil
435 were determined by chloroform-fumigation extraction as described by Brookes *et al.* (48). Root
436 and shoot biomass from field samples and intact cores were separated, weighed, dried (60°C for
437 48 h), weighed again and analysed for total C and N on an Elementar Vario EL elemental
438 analyser. Dried and ground field and core soil samples were also analysed for total C and N on
439 the Elementar Vario EL elemental analyser. Leachates and microbial extracts from soil cores
440 (enriched in ^{15}N) and field soil (natural abundance of ^{15}N) were freeze-dried, and, with dried
441 and ground root, shoot, and soil material from both cores and field samples, analysed for
442 $^{15}N/^{14}N$ ratios at the Life Sciences Mass Spectrometry Facility, Lancaster node, CEH Lancaster.
443 Enough sample to provide as near as possible to 84 µg elemental nitrogen was weighed using a
444 high precision micro-balance, (Sartorius Ltd) and then sealed into a 6 x 4 mm tin capsule.
445 Samples were then combusted using an automated Carlo Erba NA1500 elemental analyser
446 (Carlo erba, part of Thermo Scientific, USA) coupled to a Dennis Leigh Technology Isotope Ratio
447 Mass-Spectrometer (Dennis Leigh Technologies, Sandbach, Cheshire, UK.). A working standard
448 of n-carbobenzyloxy-l-aspartic acid (CBA - Sigma-Aldrich Co. Ltd.) which is calibrated against
449 the certified reference material IAEA-N1 (Ammonium sulphate – NIST number 8547, Bureau of
450 Analysed Samples Ltd, Middlesbrough, UK) was analysed after every 12th sample resulting in an
451 analytical precision of 0.63‰ for the natural abundance samples. Results are expressed in δ
452 notation; i.e. $\delta^{15}N = [(R_{sample} - R_{standard})/R_{standard}] \times 1000$ (‰) where R is the ratio of ^{15}N to ^{14}N in
453 the sample and standard, accordingly. All $\delta^{15}N$ results are expressed relative to the international
454 standard of atmospheric air. $\delta^{15}N$ values from ^{15}N enriched (core soil) and natural abundance
455 (field soil) samples were then used to calculate ^{15}N excess atom percent values in the ^{15}N
456 enriched samples, after which total amounts of ^{15}N in ecosystem pools (microbial biomass,
457 shoots, roots, soil, and leachates) were calculated using their total N pool sizes, which were then
458 scaled to g m^{-2} using the bulk density and the surface area of the cores. ^{15}N retention was
459 calculated as the sum of ^{15}N in soil, microbial biomass, and aboveground and belowground
460 vegetation.
461

462 DNA extraction, qPCR, preparation of amplicons, and sequencing
463 Nucleic acids were extracted from 0.5 g field soil as previously described (49) with
464 modifications (50) and raw extracts were stored at -20 °C. The abundances of fungi, bacteria
465 and ammonia oxidising archaea and bacteria were estimated by real-time quantitative PCR
466 (qPCR). Fungal abundance was assessed using 18S ribosomal gene primers (Fung5F and
467 FF390R, Lueders et al. 2004) (51) rather than the ITS region to avoid potential bias from the
468 variable length of ITS amplicons. Bacterial abundance was assessed using 16S rRNA gene
469 primers 968F/1401R (52). Archaeal and bacterial ammonia oxidiser abundances were assessed
470 using *amoA* primers Crenamo23F/Crenamo616R (53) and amo1F/amo2R (54), respectively.
471 Illumina paired-end sequencing of the hypervariable V3-V4 region of bacterial 16S rRNA gene
472 amplicons was performed at the Centre for Genome-Enabled Biology and Medicine (Aberdeen,
473 UK). DNA quantity, measured fluorometrically using the Qubit dsDNA BR Assay Kit
474 (ThermoFisher, UK), increased with soil age and varied from 1.3 to 190 ng g^{-1} soil (Fig. S1). We
475 removed samples with less than 5 ng DNA; for each of the remaining samples, PCR (25 cycles
476 each) was performed using 5 ng template DNA, using the forward and reverse primer sequences
477 5'-CCTACGGGNGGCWGCAG-3' (Bakt_341F) and 5'-GACTACHVGGGTATCTAATCC-3' (Bakt_805R)
478 (55) and Illumina overhang adapters 5'-TCGTCGGCAGCGTCAGATGTGTATAAGAGACAG-3' and
479 5'-GTCTCGTGGGCTCGGAGATGTGTATAAGAGACAG-3', respectively. Replicate amplification
480 products were pooled and processed with AMPure purification system (Agencourt Bioscience
481 Corporation, US). Pure pooled amplicons were then indexed with 8 PCR cycles and fragment
482 size determined on a 2200 TapeStation (Agilent, Germany). Equimolar concentrations of
483 samples were pooled and sequenced on an Illumina MiSeq sequencer with V2 2x150 bp paired-
484 end chemistry including PhiX Control V3 (Illumina, US) and generated 7,576,266 quality-
485 checked reads.
486
487 Sequence cleaning and clustering
488 Sequence analysis was performed using a custom pipeline. Briefly, Illumina-generated forward
489 and reverse reads were first paired using the *PANDAseq* Assembler and trimmed to remove
490 primer sequences (56). Trimmed assembled sequences were dereplicated by *de novo* clustering
491 at 97% similarity (57) and remaining singletons (1 read in the total dataset) were removed.
492 This generated 14,622 OTUs, with an average of 68,000 reads per sample. Average read number
493 increased significantly with soil age (from 38,909 ± 7,129 to 76,545 ± 9,350). Read numbers in 5
494 samples of young soils were very low (<4,632) and were discarded from the analysis. A
495 reference V3-V4 database was generated by performing *in silico* PCR on the SILVA 115 database
496 with the same set of primers using the *TaxMan* webserver (58). Double-annotated sequences
497 and sequences with no species annotation were removed from the database, leading to a

498 reference sequence set containing 172,576 unique, fully annotated sequences. Taxonomic
499 assignment was achieved by clustering the 14,622 representative sequences against the
500 reference database using the *Uclust* algorithm (57) in combination with a custom Linux script
501 considering all possible hits at 97% similarity, dividing the number of reads of each OTU in a
502 sample by the number of potential hit sequences, to distribute the uncertainty of the annotation.
503 OTU number was used as measure of bacterial richness and computed by custom R scripts using
504 the *vegan* (59) and *ineq* (60) packages.
505
506 Inference of the functional profile using Tax4Fun
507 We selected 46 functional traits, grouped into 7 functional categories and 16 functions, related
508 to trophic niche, growth strategy, versatility, adaptation to abiotic stress and biotic interactions
509 (Table S6). For each trait, 1 to 50 functional indicators (i.e. enzymes catalysing that particular
510 functional trait) were selected, based on literature review and exploration of web-based KEGG
511 and MetaCyc resources (versions available online in May 2017) [55, 56]. Finally, for each
512 indicator, 1 to 56 KEGG ortholog genes, encoding that particular indicator, were listed for 1,849
513 KEGG orthologs (Table S7). The known biological functions of peptides and enzymes encoded
514 by each of these KEGG proxies was examined individually. KEGG pathways often include
515 orthologs that are not directly linked to the function to which they refer; e.g. the KEGG Quorum
516 Sensing pathway contains many genes that actually encode chemotaxis or pathogen virulence.
517 In addition, individual KEGG pathways related to organic compound metabolism, often contain
518 both synthesis and degradation enzymes, which were discriminated in the present analysis.
519
520 Functional profiles, consisting of the relative abundance of KEGG orthologs, were inferred for
521 each sample from the processed 16S rRNA amplicon sequences, using the beta version of the R
522 package Tax4Fun (http://tax4fun.gobics.de/), which uses available genome annotation of the
523 nearest neighbour of each OTU, based on 16S rRNA gene sequence similarity in the SILVA
524 database (32). Tax4Fun used 73.1 ± 0.1% of the nucleotide sequences within a sample for
525 prediction (i.e. 26.9 ± 0.1% of the OTUs were not used for functional inference).
526
527 Statistical analyses
528 All variables were scaled to g m^{-2} using the bulk density, stone content, and area of the intact
529 cores. All statistical analyses were done in R version 3.5.2 (61) and all data were checked for
530 normality and log-transformed where necessary. The effect of individual glacier and time since
531 deglaciation (soil age, this excluded the never-glaciated Reference sites), and their interaction,
532 on soil, vegetation, microbial properties, and ^{15}N pools was tested using linear mixed effects
533 models with an error term for block to account for the non-independence of the 5 replicate

534 samples per soil age. This was done using the function lme in the R package *nlme* (62). To
535 compare the drivers of taxonomic and functional community composition, principal component
536 analyses (PCA) of inferred Tax4Fun KEGG functional and taxonomic profiles were followed by
537 between class analysis (BCA), calculating the between- and within-group inertia percentages
538 and testing the significance of between- and within-group variances using a Monte-Carlo test
539 with 999 iterations using R package *ade4* (63). PC scores of taxonomic and functional bacterial
540 community composition were used in subsequent analyses to explain ^{15}N uptake and retention
541 in ecosystem N pools.
542
543 We used a manual model selection procedure, again using the lme function in *nlme*, to identify
544 the main drivers of ^{15}N uptake in, and enrichment of, individual ecosystem N pools, entering
545 terms individually first, retaining significant terms, and testing them in combination and in
546 interaction, following De Vries et al. (11). In these models, an error term was included where
547 soil age (including Reference sites) was nested in glacier. Model selection was done based on
548 AIC using maximum likelihood estimation and the final most parsimonious model was run using
549 restricted maximum likelihood estimation. Finally, structural equation modelling was done
550 using the package *piecewiseSEM* (64), and regressions included an error term of soil age
551 (including Reference sites) nested in glacier (as above). Model fit was assessed using Fisher's C
552 statistic.
553
554 **Data Availability**
555 Data and code are available from 10.6084/m9.figshare.13913024. This Targeted Locus Study
556 project has been deposited at DDBJ/ENA/GenBank under the accession KCJZ00000000. The
557 version described in this paper is the first version, KCJZ01000000.
558
559
560 **Acknowledgements**
561 This work was funded by a British Ecological Society Early Career Project Grant to Franciska de
562 Vries. Franciska de Vries was supported by a BBSRC Fellowship (BB/L02456X/1) and Cécile
563 Thion was funded by NERC NE/L006286/1 and the AXA Research Fund. Benoît Bergk Pinto was
564 funded by the EU Horizon 2020 research and innovation program under the Marie Skłodowska-
565 Curie ITN 675546 – MicroArctic. We thank Victor van Velzen and Caley Brown for help in the
566 laboratory, Bernd Wemheuer for allowing us to perform functional profile predictions using a
567 then unpublished version of Tax4Fun, and Matthew Gemmel and Elaina Collie-Duguid, the Centre
568 for Genome Enabled Biology and Medicine, University of Aberdeen, UK, for advice and
569 bioinformatics support.

References

1. W. H. Schlesinger, On the fate of anthropogenic nitrogen. *Proc. Natl. Acad. Sci. U.S.A.* **106**, 203-208 (2009).
2. P. H. Templer *et al.*, Sinks for nitrogen inputs in terrestrial ecosystems: a meta-analysis of N-15 tracer field studies. *Ecology* **93**, 1816-1829 (2012).
3. K. Lajtha, Nutrient retention and loss during ecosystem succession: revisiting a classic model. *Ecology* **n/a**, e02896 (2019).
4. P. M. Vitousek, W. A. Reiners, ECOSYSTEM SUCCESSION AND NUTRIENT RETENTION - HYPOTHESIS. *Bioscience* **25**, 376-381 (1975).
5. G. M. Lovett *et al.*, Nutrient retention during ecosystem succession: a revised conceptual model. *Frontiers in Ecology and the Environment* **16**, 532-538 (2018).
6. P. M. Vitousek, P. A. Matson, DISTURBANCE, NITROGEN AVAILABILITY, AND NITROGEN LOSSES IN AN INTENSIVELY MANAGED LOBLOLLY-PINE PLANTATION. *Ecology* **66**, 1360-1376 (1985).
7. F. T. De Vries *et al.*, Extensive Management Promotes Plant and Microbial Nitrogen Retention in Temperate Grassland. *PLoS ONE* **7**, e51201 (2012).
8. F. T. De Vries, E. Hoffland, N. van Eekeren, L. Brussaard, J. Bloem, Fungal/bacterial ratios in grasslands with contrasting nitrogen management. *Soil Biol. Biochem.* **38**, 2092-2103 (2006).
9. K. Grigulis *et al.*, Relative contributions of plant traits and soil microbial properties to mountain grassland ecosystem services. *J. Ecol.* **101**, 47-57 (2013).
10. R. D. Bardgett, T. C. Streeter, R. Bol, Soil microbes compete effectively with plants for organic-nitrogen inputs to temperate grasslands. *Ecology* **84**, 1277-1287 (2003).
11. F. T. De Vries *et al.*, Abiotic drivers and plant traits explain landscape-scale patterns in soil microbial communities. *Ecol. Lett.* **15**, 1230-1239 (2012).
12. D. D. Myrold, N. R. Posavatz, Potential importance of bacteria and fungi in nitrate assimilation in soil. *Soil Biol. Biochem.* **39**, 1737-1743 (2007).
13. F. Grassein *et al.*, Relationships between functional traits and inorganic nitrogen acquisition among eight contrasting European grass species. *Ann. Bot.* **115**, 107-115 (2015).
14. F. T. De Vries, R. D. Bardgett, Plant community controls on short-term ecosystem nitrogen retention. *New Phytol.* **210**, 861-874 (2016).
15. P. Manning *et al.*, Simple measures of climate, soil properties and plant traits predict national-scale grassland soil carbon stocks. *J. Appl. Ecol.* **52**, 1188-1196 (2015).
16. R. R. Northup, Z. S. Yu, R. A. Dahlgren, K. A. Vogt, Polyphenol control of nitrogen release from pine litter. *Nature* **377**, 227-229 (1995).
17. N. Wurzburger, R. L. Hendrick, Plant litter chemistry and mycorrhizal roots promote a nitrogen feedback in a temperate forest. *J. Ecol.* **97**, 528-536 (2009).
18. F. S. Chapin, L. R. Walker, C. L. Fastie, L. C. Sharman, Mechanisms of primary succession following deglaciation at Glacier Bay, Alaska. *Ecol. Monogr.* **64**, 149-175 (1994).
19. R. L. Crocker, J. Major, Soil development in relation to vegetation and surface age at Glacier Bay, Alaska. *J. Ecol.* **43**, 427-& (1955).
20. L. R. Walker, D. A. Wardle, R. D. Bardgett, B. D. Clarkson, The use of chronosequences in studies of ecological succession and soil development. *J. Ecol.* **98**, 725-736 (2010).

21. S. M. Bernasconi *et al.*, Chemical and Biological Gradients along the Damma Glacier Soil Chronosequence, Switzerland. *Vadose Zone Journal* **10**, 867-883 (2011).
22. R. Ohtonen, H. Fritze, T. Pennanen, A. Jumpponen, J. Trappe, Ecosystem properties and microbial community changes in primary succession on a glacier forefront. *Oecologia* **119**, 239-246 (1999).
23. D. Tscherko, J. Rustemeier, A. Richter, W. Wanek, E. Kandeler, Functional diversity of the soil microflora in primary succession across two glacier forelands in the Central Alps. *Eur. J. Soil Sci.* **54**, 685-696 (2003).
24. J. Zeng *et al.*, Primary Succession of Nitrogen Cycling Microbial Communities Along the Deglaciated Forelands of Tianshan Mountain, China. *Front. Microbiol.* **7**, 12 (2016).
25. R. Brankatschk, S. Towe, K. Kleineidam, M. Schloter, J. Zeyer, Abundances and potential activities of nitrogen cycling microbial communities along a chronosequence of a glacier forefield. *Isme Journal* **5**, 1025-1037 (2011).
26. E. Kandeler, K. Deiglmayr, D. Tscherko, D. Bru, L. Philippot, Abundance of narG, nirS, nirK, and nosZ genes of denitrifying bacteria during primary successions of a glacier foreland. *Appl. Environ. Microbiol.* **72**, 5957-5962 (2006).
27. H. Goransson, H. O. Venterink, E. Baath, Soil bacterial growth and nutrient limitation along a chronosequence from a glacier forefield. *Soil Biol. Biochem.* **43**, 1333-1340 (2011).
28. S. Yoshitake, M. Uchida, H. Koizumi, T. Nakatsubo, Carbon and nitrogen limitation of soil microbial respiration in a High Arctic successional glacier foreland near Ny-angstrom lesund, Svalbard. *Polar Res.* **26**, 22-30 (2007).
29. S. C. Castle *et al.*, Nutrient limitation of soil microbial activity during the earliest stages of ecosystem development. *Oecologia* **185**, 513-524 (2017).
30. J. A. Bradley, J. S. Singarayer, A. M. Anesio, Microbial community dynamics in the forefield of glaciers. *Proceedings of the Royal Society B-Biological Sciences* **281**, 9 (2014).
31. L. Philippot, D. Tscherko, D. Bru, E. Kandeler, Distribution of High Bacterial Taxa Across the Chronosequence of Two Alpine Glacier Forelands. *Microb. Ecol.* **61**, 303-312 (2011).
32. K. P. Asshauer, B. Wemheuer, R. Daniel, P. Meinicke, Tax4Fun: predicting functional profiles from metagenomic 16S rRNA data. *Bioinformatics* **31**, 2882-2884 (2015).
33. J. B. Grace, *Structural equation modeling and natural systems* (Cambridge University Press, Cambridge, UK, 2006).
34. J. F. Salles *et al.*, Successional patterns of key genes and processes involved in the microbial nitrogen cycle in a salt marsh chronosequence. *Biogeochemistry* **132**, 185-201 (2017).
35. G. W. Nicol, S. Leininger, C. Schleper, J. I. Prosser, The influence of soil pH on the diversity, abundance and transcriptional activity of ammonia oxidizing archaea and bacteria. *Environ. Microbiol.* **10**, 2966-2978 (2008).
36. M. Zheng, H. Chen, D. Li, Y. Luo, J. Mo, Substrate stoichiometry determines nitrogen fixation throughout succession in southern Chinese forests. *Ecol. Lett.* **23**, 336-347 (2020).
37. D. N. L. Menge, S. A. Levin, L. O. Hedin, Evolutionary tradeoffs can select against nitrogen fixation and thereby maintain nitrogen limitation. *Proc. Natl. Acad. Sci. U.S.A.* **105**, 1573-1578 (2008).

38. S. Sun, R. B. Jones, A. A. Fodor, Inference-based accuracy of metagenome prediction tools varies across sample types and functional categories. *Microbiome* **8**, 46 (2020).
39. F. T. De Vries, J. W. Van Groenigen, E. Hoffland, J. Bloem, Nitrogen losses from two grassland soils with different fungal biomass. *Soil Biol. Biochem.* **43**, 997-1005 (2011).
40. K. A. Harrison, R. Bol, R. D. Bardgett, Preferences for different nitrogen forms by coexisting plant species and soil microbes. *Ecology* **88**, 989-999 (2007).
41. F. T. De Vries, H. Bracht Jørgensen, K. Hedlund, R. D. Bardgett, Disentangling plant and soil microbial controls on carbon and nitrogen loss in grassland mesocosms. *J. Ecol.* **103**, 629-640 (2015).
42. T. K. Raab, D. A. Lipson, R. K. Monson, Soil amino acid utilization among species of the Cyperaceae: Plant and soil processes. *Ecology* **80**, 2408-2419 (1999).
43. N. Legay *et al.*, Studies of NH4+ and NO3- uptake ability of subalpine plants and resource-use strategy identified by their functional traits. *Oikos* **129**, 830-841 (2020).
44. D. Moreau *et al.*, Plant traits related to nitrogen uptake influence plant-microbe competition. *Ecology* **96**, 2300-2310 (2015).
45. T. A. Theodose, C. H. Jaeger, W. D. Bowman, J. C. Schardt, Uptake and allocation of N-15 in alpine plants: Implications for the importance of competitive ability in predicting community structure in a stressful environment. *Oikos* **75**, 59-66 (1996).
46. G. P. Zogg, D. R. Zak, K. S. Pregitzer, A. J. Burton, Microbial immobilization and the retention of anthropogenic nitrate in a northern hardwood forest. *Ecology* **81**, 1858-1866 (2000).
47. F. P. Wang *et al.*, Ecosystem nitrogen retention is regulated by plant community trait interactions with nutrient status in an alpine meadow. *J. Ecol.* **106**, 1570-1581 (2018).
48. P. C. Brookes, A. Landman, G. Pruden, D. S. Jenkinson, Chloroform fumigation and the release of soil-nitrogen - a rapid direct extraction method to measure microbial biomass nitrogen in soil. *Soil Biol. Biochem.* **17**, 837-842 (1985).
49. R. I. Griffiths, A. S. Whiteley, A. G. O'Donnell, M. J. Bailey, Rapid method for coextraction of DNA and RNA from natural environments for analysis of ribosomal DNA- and rRNA-based microbial community composition. *Appl. Environ. Microbiol.* **66**, 5488-5491 (2000).
50. G. W. Nicol, D. Tscherko, T. M. Embley, J. I. Prosser, Primary succession of soil Crenarchaeota across a receding glacier foreland. *Environ. Microbiol.* **7**, 337-347 (2005).
51. T. Lueders, B. Wagner, P. Claus, M. W. Friedrich, Stable isotope probing of rRNA and DNA reveals a dynamic methylotroph community and trophic interactions with fungi and protozoa in oxic rice field soil. *Environ. Microbiol.* **6**, 60-72 (2004).
52. A. Felske, A. D. L. Akkermans, W. M. De Vos, Quantification of 16S rRNAs in complex bacterial communities by multiple competitive reverse transcription PCR in temperature gradient gel electrophoresis fingerprints. *Appl. Environ. Microbiol.* **64**, 4581-4587 (1998).
53. M. Tourna, T. E. Freitag, G. W. Nicol, J. I. Prosser, Growth, activity and temperature responses of ammonia-oxidizing archaea and bacteria in soil microcosms. *Environ. Microbiol.* **10**, 1357-1364 (2008).
54. J. H. Rotthauwe, K. P. Witzel, W. Liesack, The ammonia monooxygenase structural gene amoA as a functional marker: Molecular fine-scale analysis of natural ammonia-oxidizing populations. *Appl. Environ. Microbiol.* **63**, 4704-4712 (1997).

710 55. A. Klindworth *et al.*, Evaluation of general 16S ribosomal RNA gene PCR primers for
711 classical and next-generation sequencing-based diversity studies. *Nucleic Acids Res.*
712 **41**, e1-e1 (2013).
713 56. A. P. Masella, A. K. Bartram, J. M. Truszkowski, D. G. Brown, J. D. Neufeld,
714 PANDAseq: PAired-eND Assembler for Illumina sequences. *BMC Bioinformatics* **13**, 7
715 (2012).
716 57. R. C. Edgar, Search and clustering orders of magnitude faster than BLAST.
717 *Bioinformatics* **26**, 2460-2461 (2010).
718 58. B. W. Brandt, M. J. Bonder, S. M. Huse, E. Zaura, TaxMan: a server to trim rRNA
719 reference databases and inspect taxonomic coverage. *Nucleic Acids Res.* **40**, W82-
720 W87 (2012).
721 59. J. Oksanen *et al.*, vegan: Community Ecology Package. *R package version 2.4-4*,
722 https://CRAN.R-project.org/package=vegan (2017).
723 60. A. Zeileis, Measuring Inequality, Concentration, and Poverty. *R package version 0.2-*
724 *13*, https://CRAN.R-project.org/package=ineq (2014).
725 61. R. C. Team, *R: A language and environment for statistical computing.* (R Foundation
726 for Statistical Computing, Vienna, Austria, 2018).
727 62. J. Pinheiro, D. Bates, S. DebRoy, D. Sarkar, R-Core-Team, nlme: Linear and Nonlinear
728 Mixed Effects Models. *R package version 3.1-149* (2020).
729 63. S. Dray, A. B. Dufour, The ade4 package: Implementing the duality diagram for
730 ecologists. *Journal of Statistical Software* **22**, 1-20 (2007).
731 64. J. S. Lefcheck, PIECEWISESEM: Piecewise structural equation modelling in R for
732 ecology, evolution, and systematics. *Methods in Ecology and Evolution* **7**, 573-579
733 (2016).
734

735

Tables and figures

Table 1. ANOVA table of lme models for the effect of soil age, glacier, and their interaction, on soil, plant and microbial properties. Significant effects (*P*<0.05) are highlighted in bold, significant trends (*P*>0.1) in italics.

	Soil age			***Glacier***		***Glacier x soil age***	
	$F_{1,9}$	*P*	Direction of change with soil age	$F_{2,9}$	*P*	$F_{2,9}$	*P*
Soil moisture (g g^{-1})	0.96	0.353		1.04	0.391	0.62	0.559
Soil pH	**21.75**	**<0.0001**	↓	**65.04**	**<0.0001**	2.69	0.121
Soil C (g m^{-2})	**16.18**	**0.003**	↑	*4.12*	*0.054*	2.15	0.172
Soil N (g m^{-2})	**31.30**	**0.0003**	↑	1.74	0.229	1.20	0.345
Soil C/N	0.76	0.405		1.51	0.273	0.31	0.739
NH_4^+ concentration (g m^{-2})	0.66	0.439		3.98	0.058	1.58	0.258
NO_3^- concentration (g m^{-2})	1.67	0.229		1.89	0.207	1.68	0.240
DON concentration (g m^{-2})	1.33	0.279		0.04	0.957	1.21	0.341
DOC concentration (g m^{-2})	**15.86**	**0.003**	↑	0.41	0.675	0.12	0.884
Shoot biomass (g m^{-2})	3.15	0.110		1.09	0.377	1.27	0.327
Root biomass (g m^{-2})	3.51	0.093	(↑)	2.17	0.170	0.31	0.738
Shoot N (g m^{-2})	1.39	0.267		0.45	0.652	1.49	0.276
Root N (g m^{-2})	**10.10**	**0.011**	↑	2.12	0.176	1.90	0.205
Shoot C/N	0.75	0.409		0.22	0.808	0.74	0.505
Root C/N	1.17	0.307		2.32	0.153	0.28	0.760
Microbial biomass C (g m^{-2})	**25.39**	**0.0007**	↑	1.70	0.236	0.05	0.946
Microbial biomass N (g m^{-2})	**10.46**	**0.010**	↑	1.97	0.196	0.04	0.965
Microbial C/N	1.39	0.267		1.15	0.358	0.24	0.793
DNA (ng m^{-2})	**6.57**	**0.031**	↑	0.60	0.571	0.26	0.778
16S (gene copies m^{-2})	**20.78**	**0.001**	↑	0.09	0.910	0.13	0.880
18S (gene copies m^{-2})	**18.98**	**0.002**	↑	0.64	0.548	0.28	0.765
18S/16S	1.39	0.269		**6.02**	**0.022**	2.30	0.156
AOA (gene copies m^{-2})	**48.21**	**0.0001**	↑	**7.94**	**0.010**	*3.70*	*0.067*
AOB (gene copies m^{-2})	2.58	0.147		**15.02**	**0.002**	0.90	0.446
AOA/AOB	**14.41**	**0.009**	↑	0.21	0.819	0.37	0.707

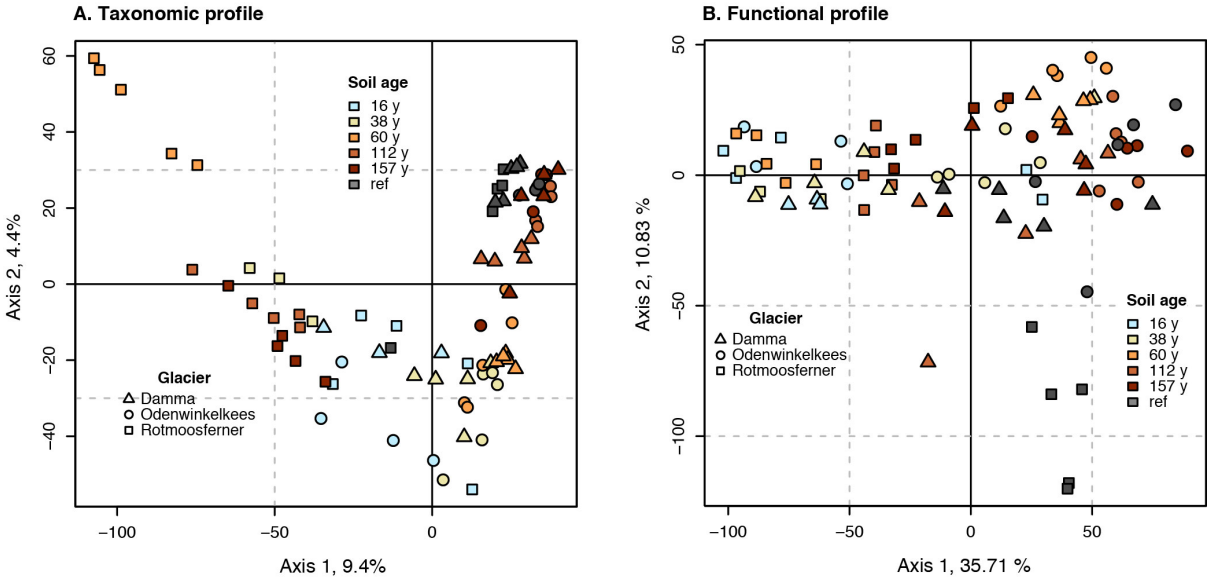

C. Variance explained by soil age and/or glacier (%)

	Taxonomy	Function
Soil age	12	23
Glacier	8	14
Soil age x glacier	40	59

Fig. 1. PCA of taxonomic (A) and functional (B) microbial community composition as affected by soil age and glacier.

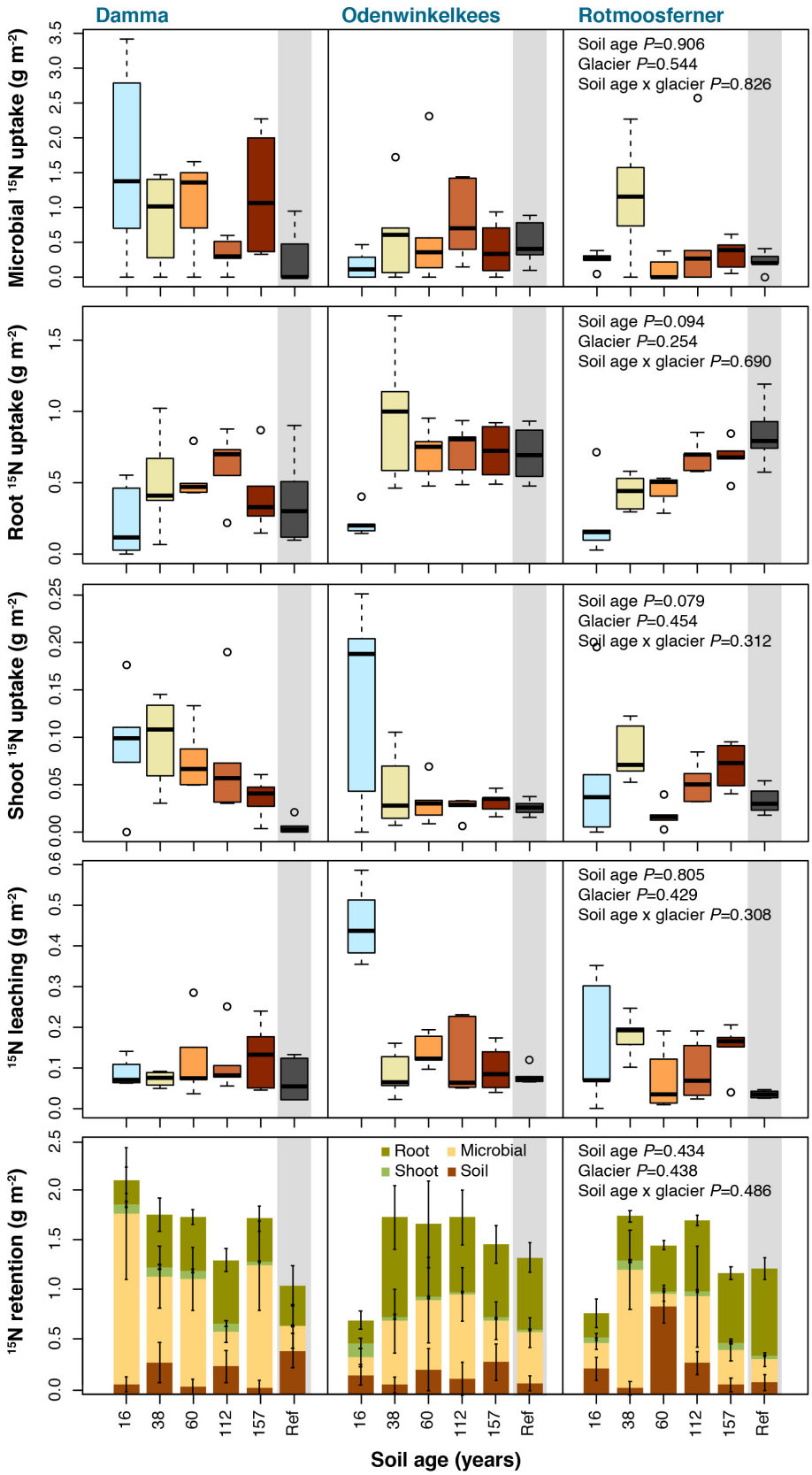

Fig. 2. Uptake, leaching, and retention of ^{15}N 48h after addition in different ecosystem N pools as affected by soil age and glacier.

Table 2. Selected linear mixed effects models for ^{15}N uptake, retention, and leaching. All biomass, C, and N parameters are expressed in g m^{-2}.

	ln Microbial ^{15}N uptake (g m^{-2})		***ln Shoot ^{15}N uptake (g m^{-2})***		***Root ^{15}N uptake (g m^{-2})***		***^{15}N retention (g m^{-2})***		***ln ^{15}N leaching (g m^{-2})***	
	Parameter value	*P*	Parameter value	*P*	Parameter value	*P*	Parameter value	*P*	Parameter value	*P*
Intercept	+0.143	0.138	+0.129	<0.0001	-0.053	<0.0001	+0.948	<0.0001	-3.355	<0.0001
Soil C and N pools			-0.028 * ln Soil N	<0.0001					+0.316 * ln Soil C/N	0.017
Microbial C and N pools	+0.056 * Micr N -0.076 * ln Micr C/N	<0.0001 0.0033					+0.088 * Micr N	<0.0001		
Plant C and N pools			+0.028 * ln Shoot N	0.006	+0.011 * Root C/N +0.0005 * Root biom -0.000007 * Root C/N * Root biom	<0.0001 <0.0001 0.0007				
Soil dissolved C and N pools	-0.127 * ln NO_3^-	0.0031			-0.282 * ln NH_4^+	0.0077				
Microbial community properties							+0.007 * Func PC2	0.013	+0.068 * Tax PC2 +0.008 * Func PC2 -0.026 * Tax PC2 * ln Soil C/N	0.008 0.080 0.006
df	59		65		68		61		59	
AIC	50.4		-286.9		57.5		157.5		246.4	
R-squared	0.280		0.401		0.481		0.248		0.318	

Abbreviations: Micr N – microbial biomass N; Micr C/N – microbial biomass C/N ratio; Func PC2 – PCA axis 2 scores for functional microbial community composition; Tax PC2 – PCA axis 2 scores for taxonomic microbial community composition

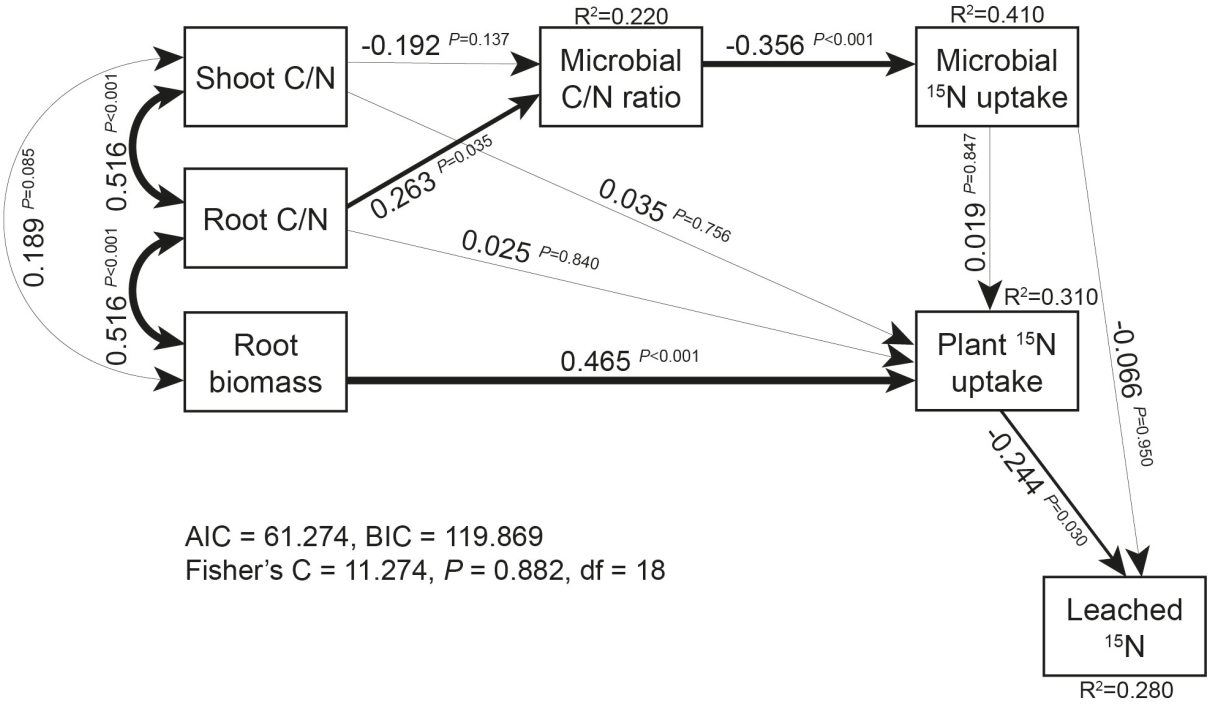

Fig. 3. Structural equation model explaining plant and microbial ^{15}N uptake and ^{15}N leaching across all glaciers and soil ages.