HAL
open science

Frugal innovation for sustainable rural electrification

Bunthern Kim, Chrin Phok, Maria Pietrzak-David, Pascal Maussion

To cite this version:

Bunthern Kim, Chrin Phok, Maria Pietrzak-David, Pascal Maussion. Frugal innovation for sustainable rural electrification. EPE'20 ECCE Europe, Sep 2020, Lyon, France. pp.1-9. hal-03210802

HAL Id: hal-03210802

https://hal.science/hal-03210802v1

Submitted on 28 Apr 2021

HAL is a multi-disciplinary open access archive for the deposit and dissemination of scientific research documents, whether they are published or not. The documents may come from teaching and research institutions in France or abroad, or from public or private research centers.

L'archive ouverte pluridisciplinaire **HAL**, est destinée au dépôt et à la diffusion de documents scientifiques de niveau recherche, publiés ou non, émanant des établissements d'enseignement et de recherche français ou étrangers, des laboratoires publics ou privés.

Open Archive Toulouse Archive Ouverte

OATAO is an open access repository that collects the work of Toulouse researchers and makes it freely available over the web where possible

This is an author's version published in: https://oatao.univ-toulouse.fr/27210

Official URL:

https://doi.org/10.23919/EPE20ECCEEurope43536.2020.9215876

To cite this version:

Kim, Bunthern and Phok, Chrin and Pietrzak-David, Maria and Maussion, Pascal *Frugal innovation for sustainable rural electrification.* (2020) In: EPE'20 ECCE Europe, 7 September 2020 - 11 September 2020 (Lyon, France).

Any correspondence concerning this service should be sent to the repository administrator: tech-oatao@listes-diff.inp-toulouse.fr

Frugal Innovation for Sustainable Rural Electrification

Bunthern Kim[(1)(2)], Phok Chrin [(1)(2)], Maria Pietrzak-David[(1)], Pascal Maussion[(1)]
(1) LAPLACE, UNIVERSITÉ DE TOULOUSE, INP, UPS, CNRS, Toulouse, France,
(2) INSTITUTE OF TECHNOLOGY OF CAMBODIA, Phnom Penh, Cambodia,
Phone: +33 5 34 32 23 59, +33 5 34 32 23 64, Fax: +33 5 61 63 75 88
bunthern.kim@laplace.univ-tlse.fr, pchrin@itc.edu.kh, Maria.David@laplace.univ-tlse.fr,
Pascal.Maussion@laplace.univ-tlse.fr,

Keywords

«Induction motor», «Generation of electrical energy», «Generator excitation system», «Photovoltaic», «Sustainable system/technology»

Abstract

In this article an original solution is proposed by using wasted electric and electronic equipment (second-life components) to create the new power generation systems for remote rural areas. This frugal innovation for rural electrification guarantees an important support social, educational and economic development goals especially in Southeast Asian countries.

Introduction

The use of second-life components, available at low cost locally, can prove to be a viable solution for the electrification of isolated villages in developing countries. If based on renewable energies, they contribute to the fight against global warming and can promote economic development and education. With local available energies, for example biogas or electricity, better education, reduced time for collecting wood, access to information or entertainment (TV, radio, laptops), improve economic activities, human health and life could be better. Indeed, many electrical and electronic products are often discarded even before their end of life [1], for reasons of fashion, marketing or change of use. This leads to an increase in the consumption of energy and raw materials. The innovative solutions proposed in this paper could offer to a new sustainable economic strategy developing countries.

This study focuses, of course, on the application of WEEE reuse in a stand-alone renewable energy system as a solution for electrification in rural areas in some developing countries. Solar, hydro or wind energy are chosen thanks the outcomes of many international reports such as [2] in a global survey regarding the energy access in the Least Developed Countries. Moreover, these energies have also been selected by many of these countries in their Intended Nationally Determined Contribution [3] for COP21, in 2015.

The different architectures developed in this study are described in next section. They include two parallel energy sources: solar panels and hydraulic generation and energy storage in in lead-acid batteries. Re-use power electronic devices with minimum modifications are used for DC/DC or DC/AC or even AC/DC conversions of energy. Different solutions have been proposed for this objective, but the main idea of this study concerns the research of minimal modifications in the existing products, so as not to increase the environmental impacts and also encourage a large dissemination. The main elements of a Life Cycle Analysis (LCA) of the solar chain are given in [4]. The minimum modifications of one ATX PC Power Supply Units (PSU) are presented and an MPPT is implemented in a Arduino microcontroller. Moreover, this sections also provides some experimental results of several PSU associations in order to increase the supplied power. Finally, simulations and tests on a test bench, with a 1,5kW 3 phase induction motor used as a single phase generator validate the system feasibility.

Global presentation of frugal solution

The global architecture of the studied system is shown in Fig. 1. It consists of two interconnected "solar" and "hydraulic" lines. The solar chain includes photovoltaic (PV) panels and a Personal Computer (PC) power supply (PSU) instead of a commercial solar converter. We opt for a Maximum Power Point Tracking (MPPT) control strategy which has been successfully implemented in an Arduino Due Microcontroller. This microcontroller is very popular because of its low cost, its high availability in the market and its open source software.

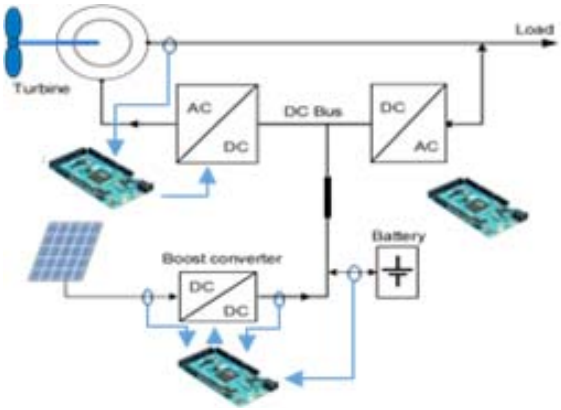

Fig. 1: Rural electrification architecture

The hydraulic line includes a second life squirrel cage induction motor which has been purchased from a local scrap dealer (Fig. 2) and a voltage source inverter (VSI), initially dedicated to supply PCs as emergency network (DC/AC converter). The energy storage will be provided by second-life automotive lead-acid batteries.

Fig. 2: Induction recovery motors in Cambodia (low cost second hand products from China, Taiwan, Malaysia, Thailand…)

Since the original objective of this frugal innovation is the electrification of remote villages in Southeast Asian countries, the functional unit is defined to satisfy the daily energy needs of a rural village over a period of 20 years. The load profile of a typical small village in Thailand [5] was chosen for this case study (Fig. 3).

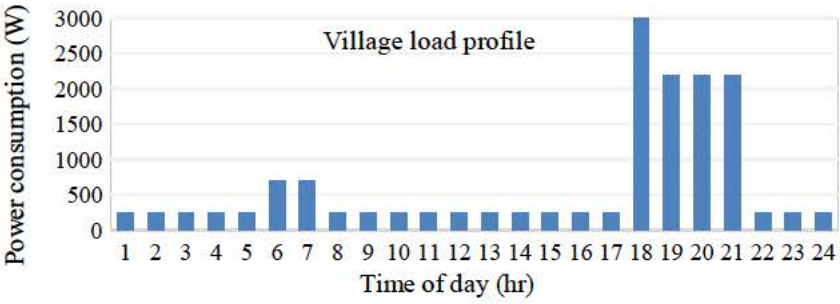

Fig. 3: Load profile of a single village in Chi Angria, Thailand [5], [6]

Solar Line Presentation

Power supply unit description and modification

The ATX PC Power Supply Units (PSU) which replace the charge controller unit are slightly modified in order to first, disable their protection functionalities, second to allow the interface between the microcontroller and the DC/DC converter of the power supply and to reduce their input voltage range (from 280V to 100V as to become more suitable to the output of a small PV generator).
The internal circuit board of HP305-00 is given in Fig. 4. The basic functionality of PSU shown in Fig. 5 is to generate regulated constant DC voltages for computer hardware from the grid (230V AC) and +12V DC as the most powerful output.

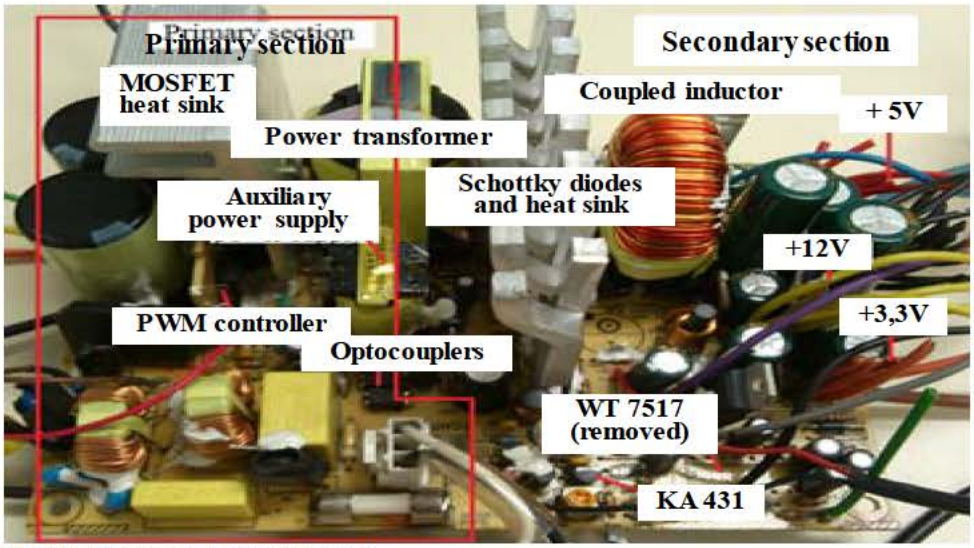

Fig. 4: HP305P-00 internal circuit board.

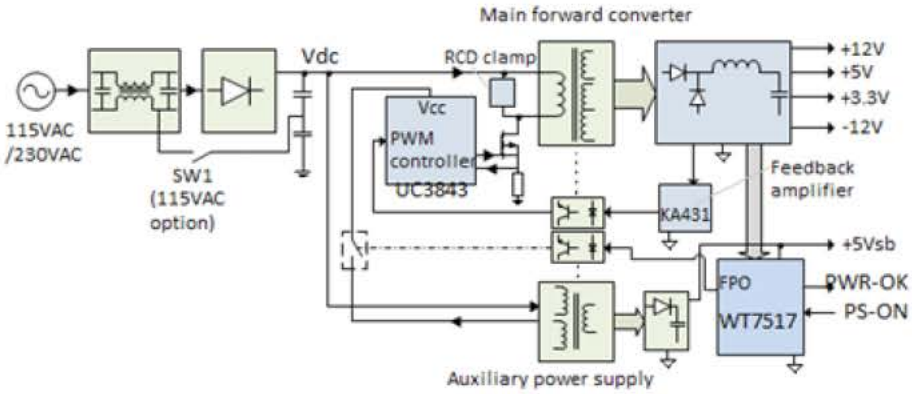

Fig. 5: Functional block diagram of DELL HP305P-00. [7]

This functionality does not fit the requirements of small renewable energy systems which provide low input DC voltage (100V) and need variable output voltage. Figure 5 shows the components which have been modified. Firstly, the protection functionality of WT7517 should be removed to allow the converter to be used independently of the limitation of the standard power supply. In addition, the range of the PSU's input voltage should be reduced by using the primary side center tap pin of the main transformer. Detailed analysis and modifications are shown in figures 6 and 7. The objectives of the feedback circuit modifications are that the output voltage can be changed by the controller through an external input voltage, given by a MPPT microcontroller for example. The different modifications are depicted in Figures 6.a and 6.b.

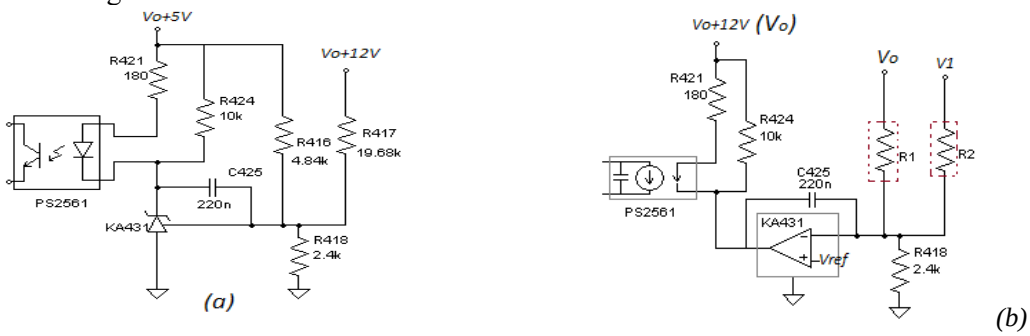

Fig. 6: Initial (a) and modified feedback (b) circuits

Then, the Schottky diodes, resistors, capacitors, inductors of the +5V, +3.3V and -12V circuits are removed and the second Schottky diode of the +12V circuit has to be grounded. After these modifications, shown in Figure 7, only the +12V works while the 5VSB is generated from another part of the converter.

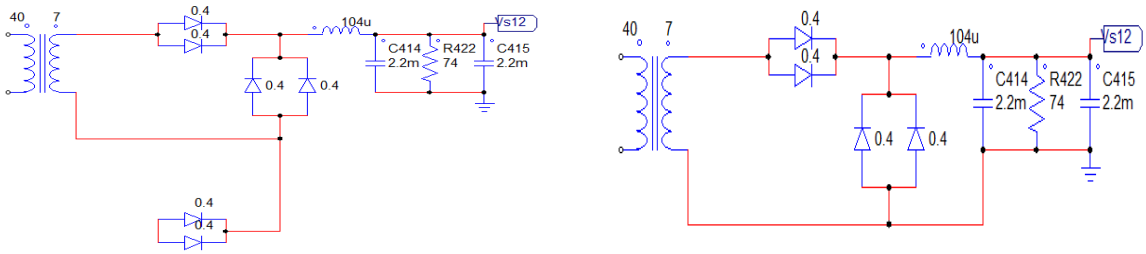

(a) (b)

Fig. 7: +12V circuit scheme before modification(a) end after (b) modification

A problem on the +12V circuit has to be solved: the maximum output voltage cannot exceed 16V, due to output filter capacitor ratings. The solution is the serial insertion of another capacitor (to increase the voltage) and a parallel connection of two identical legs to come back to the initial value of the capacitance.

The detailed analysis and experimental results are presented in [8]. The value of the resistors R_1 and R_2 in Fig. 6b are changed from 10kΩ to 18kΩ in order to avoid the ground problem and use any PSU without any danger. The relation of V_o and V_1 at steady state can be written by (1) and the output value V_o can be controlled by the injected signal V_1 following the relation (2).

$$\left(1+\frac{R_{418}}{R_1}+\frac{R_{418}}{R_2}\right)V_{ref}=\frac{R_{418}}{R_1}V_o+\frac{R_{418}}{R_2}V_1 \quad (1) \qquad V_o=20-V_1 \quad (2)$$

As a consequence of this section and without the need for a new printed circuit board, contrary to [4], this initial AC/DC static converter with regulated fixed output voltage is transformed into a DC/DC converter with variable voltage (or current) controlled. The complete modifications on the PSU are described in [8] and [9].

Control of the PSU for photovoltaic systems

The performance of the modified PSU with MPPT control have been successfully implemented an Arduino Due microcontroller and has been tested for load step changes and sun light intensity modification. The parameters used in this test for control discretised algorithms [11], i.e. Perturb-and-Observe (P&O) and Incremental Conductance (INC) methods are made with the sampling period *Ta*=0,02s and duty ratio $\Delta\alpha = 0.01$. In this way the validation of satisfactory operation of this system is confirmed (Fig. 8).

For experimental validation, the solar array consists of twelve FVG 10P solar panels (10W). These panels have been connected in two parallel strings of six panels to match the input voltage range of PSU. In this topology, at the maximum power point, the PV output voltage is equal to 105V at Standard Test Condition (STC). The 12V, 44Ah lead-acid battery has been sized for daily energy storage compliant with one day needs of a typical rural village in such rural areas [6].

Several units must be associated in serial and/or parallel configurations in order to increase the power delivered to the end users. More details could be found in [8], [9].

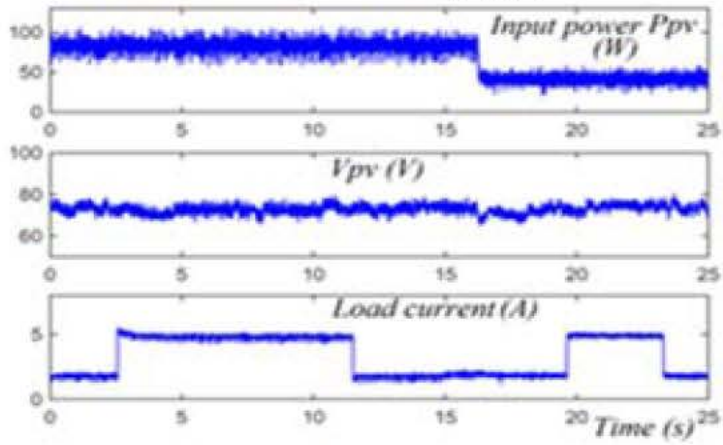

Fig. 8: PSU operation with load changing and light modification incident (INC algorithm).

Electro-Hydraulic Line

System presentation

Several work have been done according to the idea frugal innovative hydroelectric generation system, based on recycled materials, located directly in isolated villages or nearby. The electrical generation is achieved thanks to an old induction machine (IM) purchased at low price from a local scrap dealer. One phase of this IM is excited by a voltage inverter (VSI), initially devoted to PC power supply in an emergency network. As shown in Figure 9, the excited phase of the EIG is connected to the very simple push-pull DC/AC of the UPS circuit to step up the voltage through a transformer.

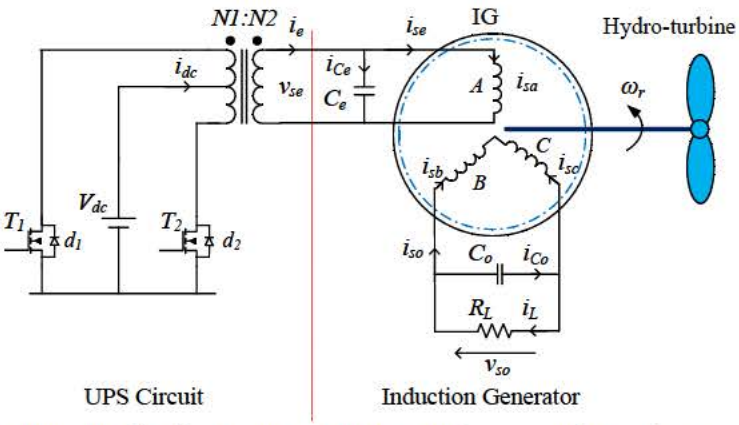

Figure 9: EIG architecture supplied by recovery UPS, transformer and reactive energy compensation capacitor

The equivalent circuit of this transformer is shown in the Figure 10. Its primary winding parameters, resistance R_1 and reactance X_1, are referred to secondary winding, i.e. $R_1'=(N_2/N_1)^2R_1$, $X_1'=(N_2/N_1)^2X_1$

So, the equivalent resistance R_{eq} and reactance X_{eq} can be expressed as shown in the Fig. 11: $R_{eq}=R'_1+R_2$, and $X_{eq}=X'_1+X_2$, ($X_{eq}=2\pi f\ L_{eq}$). The transformer output voltage can be expressed as follows:

$$v_2'=v_2+R_{eq}i_2'+L_{eq}\frac{di_2'}{dt} \tag{3}$$

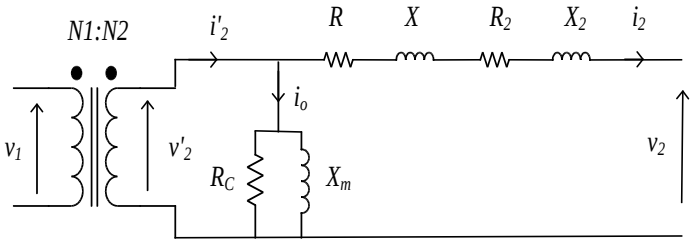

Figure 10: Equivalent transformer circuit

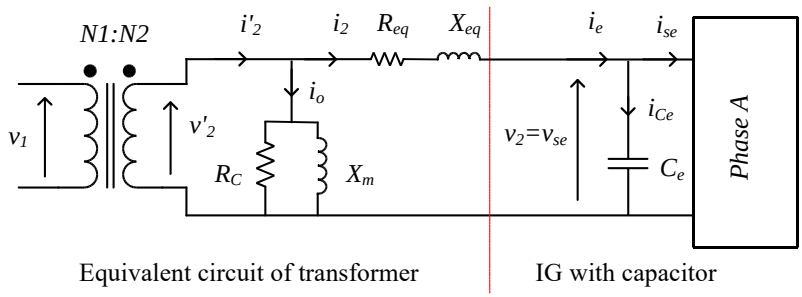

Figure 11: Equivalent circuit of transformer and EIG with capacitor [12]

As shown in the Figure 11, the transformer secondary winding is connected to the excitation phase A of EIG. So, the $v_2'=v_{se}$ and $i_2=i_e$. In fine, the state space equation describing the EIG behavior is formulated as below:

$$\dot{x}_T=[A_T]x_T+[B_T]u_T \tag{4}$$

with $x_T=[i_e\, v_{se}\, v_{so}\, i_{se}\, i_{so}\, i_{r\alpha}\, i_{r\beta}]^T$ system state space vector and $u_T=v_2'$ system input, expressed by (3).

The system matrices are expressed as follows:

$$[A_T]=\begin{bmatrix}[A_{T1}] & [A_{T2}]\\ [A_{T3}] & [A_{T4}]\end{bmatrix},\quad [A_{T1}]=[-R_{eq}/L_{eq}],\quad [A_{T2}]=[-1/L_{eq}\quad 0\quad 0\quad 0\quad 0\quad 0];$$

$$[A_{T3}]=[B_c],\qquad [A_{T4}]=[A_c],\quad [B_T]=\begin{bmatrix}1/L_{eq}\\ 0_{6\times 1}\end{bmatrix}$$

The matrices $[A_c]$ and $[B_c]$ are defined from the EIG modeling with capacitors C_e and C_0 only.

$$[A_c]=\begin{bmatrix}A_{c0} & A_{c1}\\ [B] & [A]\end{bmatrix},[B_c]=[1/C_e\quad 0_{2\times 2}]^T \text{with}[A_{c0}]=\begin{bmatrix}0 & 0\\ 0 & -1/R_LC_o\end{bmatrix},$$

$$[A_{c1}]=\begin{bmatrix}-1/C_e & 0 & 0 & 0\\ 0 & -1/C_o & 0 & 0\end{bmatrix}$$

The matrices [A] and [B] were defined in our previous study concerning the EIG modeling [12]. Finally, the dynamic system matrix [A_T] corresponds to the 7th order system written as follows:

$$
[A_T]=\begin{bmatrix}
\frac{-R_{eq}}{L_{eq}} & \frac{-1}{L_{eq}} & 0 & 0 & 0 & 0 & 0 \\
\frac{1}{C_e} & 0 & 0 & -\frac{1}{C_e} & 0 & 0 & 0 \\
0 & 0 & \frac{-1}{C_o R_L} & 0 & \frac{-1}{C_o} & 0 & 0 \\
0 & \frac{-L_{rr}}{L_1} & 0 & \frac{R_s L_{rr}}{L_1} & \frac{-\sqrt{3} L_{ms}^2 \omega_r}{L_1} & \frac{-R_r L_{ms}}{L_1} & \frac{L_{ms} \omega_r L_{rr}}{6 L_1} \\
0 & 0 & \frac{-L_{rr}}{L_b} & \frac{\sqrt{3} L_{ms}^2 \omega_r}{L_2} & \frac{2 R_s L_{rr}}{L_2} & \frac{-\sqrt{3} L_{ms} \omega_r L_{rr}}{6 L_2} & \frac{-\sqrt{3} R_r L_{ms}}{L_2} \\
0 & \frac{L_{ms}}{L_1} & 0 & \frac{-R_s L_{ms}}{L_1} & a_{t(5,4)} & \frac{R_r (L_{ls}+L_{ms})}{L_1} & a_{t(5,6)} \\
0 & 0 & \frac{\sqrt{3} L_{ms}}{L_b} & \frac{-2 L_{ss} L_{ms} \omega_r}{L_2} & \frac{-2\sqrt{3} L_{ms} R_s}{L_2} & a_{t(6,5)} & \frac{2 R_r L_{ss}}{L_2}
\end{bmatrix} \quad (5)
$$

with $a_{t(5,4)}=\frac{\sqrt{3}(L_{ls}+L_{ms}) L_{ms} \omega_r}{L_1}$, $a_{t(5,6)}=\frac{6 \omega_r L_{s1}-7 L_{ms}^2 \omega_r}{6 L_1}$, $a_{t(6,5)}=\frac{7 L_{ms}^2 \omega_r-4 \omega_r L_{s2}}{2 L_2}$, ω_r – rotation speed

L_{ls} - leakage inductance of stator winding, L_{ms}- maximal value of magnetizing inductance of stator winding

As this system is non stationary, its dynamics using pole locus evolutions and frequency responses were analyzed according to the parameter variations to find most preponderant of them modifying the system behavior [13]. This analysis helps to design the voltage control which will be discussed with details in final version of this article.

Output voltage control of the EIG

The output voltage of the push pull inverter is controlled by its duty ratio thanks to a feedback loop, given below. The output voltage of EIG depends on its excitation voltage v_{se} and its rotation speed. In this application of power generation output voltage and frequency must be always kept constant even in any disturbance condition. Moreover, in hydropower applications rotation speed variations are not easy to manage, except in high quality hydropower stations. Consequently, speed and load current variations will be considered as system disturbances. Our experimental set up of an EIG 1.5kW and disposal UPS are shown in Fig. 12.

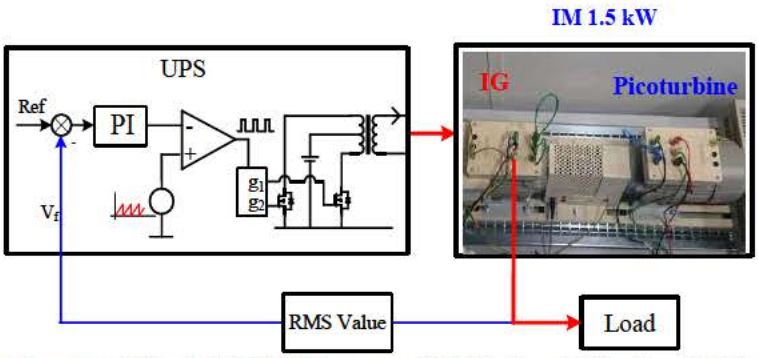

Fig. 12: Experimental setup of the 1,5 kW EIG + reused UPS, f_{sw}=50Hz, R_L=240Ω, Ce=20µF, C_o=10µF

Two identical 3-phase IM are connected on the same shaft axis. As usual and only for development purpose during lab work, a torque sensor is placed between two machines. One IM is considered as the pico-turbine and runs as a motor in order to drive the other machine operating as an induction generator. The small Single Phase Induction Generator (SPIG) has a nominal output power of 500W (on one phase) since the nominal power of the 3-phase machine is 1,5kW.

First PI controller is tested for the closed loop systems. EIG associated with the push-pull inverter of the UPS is described by a transfer function [12],[13] of a high degree (7th order). In this study, the well-known and robust Ziegler-Nichols tuning method is applied [14] to determine the controller gains. It is important to justify this choice in the framework of the re-used elements, where no data is available, nor data sheets.

Experimental results

Fig. 13 illustrates the experimental results of the 1.5 kW EIG supplied by the re-used UPS. For output voltage stability test, the feedback was tested under load resistance variations from 240Ω and 127Ω (corresponding to output powers from 200W to 380W). Four variables where recorded and compared to simulation results

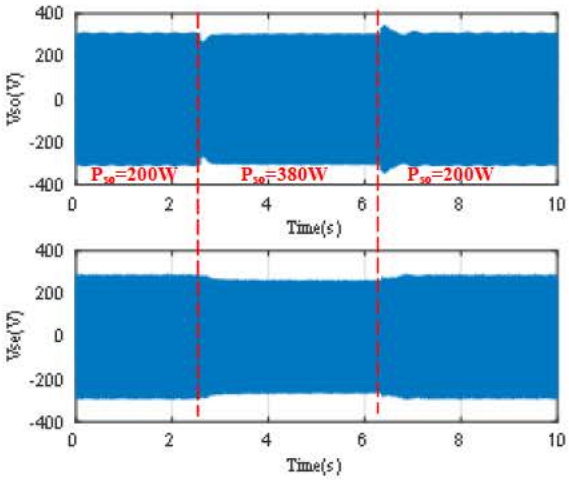

(a) Output V_{so} and input V_{se} voltage responses

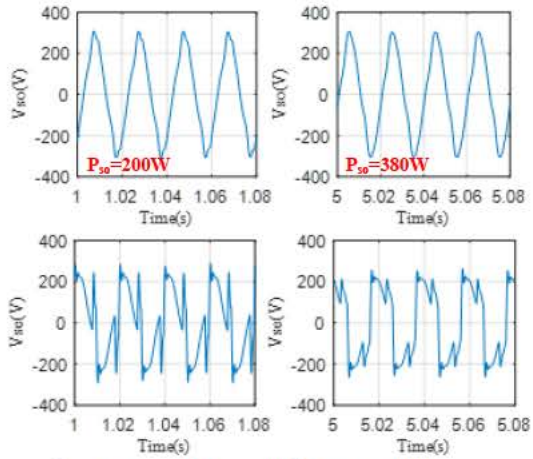

(b) Zoom of Vso and Vse responses

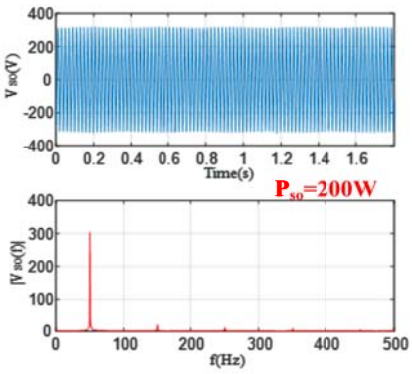

(c) FFT of output voltage when load power 200W

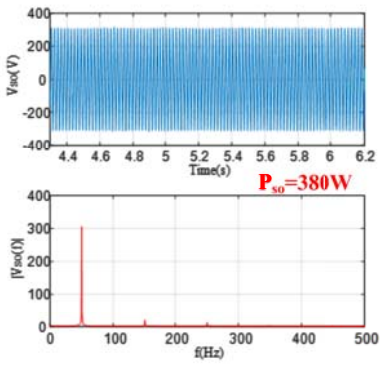

(d) FFT of output voltage when load power 380W

Fig. 13: Experimental results with PI control: voltage response of the 1.5 kW IG with reuse UPS during step load change (F_{sw}=50Hz, R_L=240Ω- 127Ω -240Ω, Ce=20µF, C_o=10µF)

The output voltage raises/drops about 55V (peak voltage in Fig. 13) and gets back to its reference with a settling time around 200ms. System voltage is stable and at the required amplitude after the transient due to load disturbances and its frequency remains constant as the excitation voltage is always 50 Hz, as shown in FFT analysis (Fig. 13 (c) and (d))

Conclusion

In this paper some innovative and original frugal solutions for rural electrification are presented and tested. The obtained experimental results are very encouraging. They are based on modeling, sizing, characterization and control of re-used materials for rural electrification in developing countries. In final version this study will supplemented by a life cycle analysis that justifies the choice of environmental impacts avoided. The reused components of power electronics and also the EIG, presents very attractive economically suitable solution for rural electrification of developing countries. Low cost of local components and frugal proposed innovative solution for rural electrification allows a creation of new life conditions for local peoples and also new future local jobs concerning all light modifications of reused products.

References

[1] Blenkinsopp, T.; Coles, S.R; Kirwan, K.; 2013. Renewable energy for rural communities in Maharashtra. India, Energy Policy, Volume 60, pp 192-199

[2] The Least Developed Countries Report 2017, Transformational energy access. United Nations Conference on Trade and Development, United Nations Publication (UNCTAD/LDC/2017). http://unctad.org/en/PublicationsLibrary/ldcr2017

[3] Intended Nationally Determined Contribution (INDCs), as communicated by Parties for the COP21. http://www4.unfccc.int/submissions/indc/Submission%20Pages/submissions.aspx

[4] Kim, B.: Contribution to the design and control of a hybrid renewable energy generation system based on reuse of electrical and electronics components for rural electrification in developing countries, 2019, PhD thesis at Toulouse INP

[5] Ketjoy,N. : Photovoltaic Hybrid Systems for Rural Electrification in the Mekong Countries, 2005, PhD Thesis at University of Kassel

[6] Nayak,C.K.; Nayak,M.R.: Optimal size and cost analysis of standalone PV system with battery energy storage using IHSA, International Conference on Signal Processing, Communication, Power and Embedded System, SCOPES, 2016

[7] Rogers,D.; Green, J.; Foster, M.; Stone, D.; Schofield, D.; Abuzed, S.; Buckley, A.: Repurposing of ATX computer power supplies for PV applications in developing countries, International Conference on Renewable Energy Research and Applications, ICRERA, 2013.

[8] Hop Dinh, T.B.; Phan,Q.D.; Mausion, P.: Associations of Second Life of Power Supply Units as Charge Controllers in PV System, IECON 2018, Washington, USA,

[9] Kim,B.; Cenni,H.; Roth,A.; Bun,L.; Pietrzak-David,M.; Maussion,P.: How to reuse PC power supply for

renewable energy applications", EPE 2015, Suitzerland
[10] Rogers, D.; Green, J.E.; Foster, M.P.; Stone,D.A.; Schofield, D.; Buckley, A.; Abuzed, S.: ATX power supply derived MPPT converter for cell phone charging applications in the developing world, 7th IET International Conference on Power Electronics, Machines and Drives, PEMD 2014
[11] Sera, D.; Mathe, L.; Kerekes, T.; Viorel Spataru, S.; Teodorescu, R.: On the Perturb-and-Observe and Incremental Conductance MPPT methods for PV Systems, IEEE Journal on Photovoltaics, Vol.3, N° 3, July 2013
[12] Chrin, P.; Maussion, P.; Pietrzak-David, M.; Dagues, B.; Bun, L.: Modeling of 3-phase Induction Machine As Single Phase Generator for Electricity Generation from Renewable Energies in Rural Areas, IEEE International Electric Machines and Drives Conference, IEMDC 2015, USA
[13] Chrin, P.: Contribution to electric energy generation for isolated-rural areas using 2nd life components and renewable energies: modelling and control of an induction generator, 2016 PhD Thesis at Toulouse INP
[14] Ziegler, J.G.; Nichols, N.B.: Optimum settings for automatic controller, Transaction, ASME 1942, vol. 64, pp. 759–768,