HAL open science

VIBRO-ACOUSTIC RESPONSE OF A STIFFENED PANEL UNDER SYNTHETIZED SPACE-TIME RANDOM EXCITATIONS

Nicolas Totaro, Puxuan Wang, Marc Pachebat, Olivier Robin

To cite this version:

Nicolas Totaro, Puxuan Wang, Marc Pachebat, Olivier Robin. VIBRO-ACOUSTIC RESPONSE OF A STIFFENED PANEL UNDER SYNTHETIZED SPACE-TIME RANDOM EXCITATIONS. e-Forum Acusticum 2020, Dec 2020, Lyon (virtual), France. 10.48465/fa.2020.0926 . hal-03191826

HAL Id: hal-03191826

https://hal.science/hal-03191826v1

Submitted on 7 Apr 2021

HAL is a multi-disciplinary open access archive for the deposit and dissemination of scientific research documents, whether they are published or not. The documents may come from teaching and research institutions in France or abroad, or from public or private research centers.

L'archive ouverte pluridisciplinaire **HAL**, est destinée au dépôt et à la diffusion de documents scientifiques de niveau recherche, publiés ou non, émanant des établissements d'enseignement et de recherche français ou étrangers, des laboratoires publics ou privés.

VIBRO-ACOUSTIC RESPONSE OF A STIFFENED PANEL UNDER SYNTHETIZED SPACE-TIME RANDOM EXCITATIONS

Nicolas Totaro[1] **Puxuan Wang**[1] **Marc Pachebat**[2] **Olivier Robin**[3]
[1] Univ Lyon, INSA-Lyon, Laboratoire Vibrations Acoustique,
F-69621 Villeurbanne, France
[2] Laboratoire de Mécanique et d'Acoustique (LMA), CNRS, Aix Marseille Univ, Centrale Marseille,
F-13013 Marseille, France.
[3] Groupe d'Acoustique de l'Université de Sherbrooke, Université de Sherbrooke,
2500 Boulevard de l'Université, Sherbrooke, QC, Canada J1K 2R1
nicolas.totaro@insa-lyon.fr, olivier.Robin@USherbrooke.ca, pachebat@lma.cnrs-mrs.fr

ABSTRACT

In the framework of the VIRTECH ANR project, alternative experimental methods are developed to replace or complement the use of large and costly facilities (reverberant room, wind tunnel) for the vibro-acoustic characterization of structures under random excitations (Diffuse Acoustic Field - DAF, Turbulent Boundary Layer - TBL, respectively). In the case of TBL excitation, numerical methods are investigated to replace Computational Flow Dynamics (CFD) methods that are computationally costly, even when flat panels without obstacle nor pressure gradient are considered. In that context, this work presents a space-time (2D+t) synthesis approach to efficiently synthetize a wall pressure field that can be coupled to a deterministic vibration model of the structure. Any model of wall pressure field (autospectra, correlation length) can be used to set up the synthesis approach to represent random excitations like DAF or TBL. The pressure field radiated by the panel can even be obtained in the time domain, and be used for sound perception purposes to evaluate the variations linked to the damping of the structure, the empirical model used for the synthesis (eg. Corcos, Mellen) or the probability density functions of the wall pressure excitation (Gaussian or non Gaussian). In the present work, a deterministic finite element model of a stiffened panel is coupled to 2D+t stationary wall pressure fields to obtain its vibroacoustic response under DAF and TBL excitations in the frequency domain.

1. INTRODUCTION

With the aim of reducing cost and complexity of tests as well as their environmental impact, researchers and manufacturers are beginning to seek alternatives to usual facilities (wind tunnels, reverberation rooms, flight tests) for the evaluation of vibro-acoustic performances of panels excited by DAF or TBL. In that perspective, experimental techniques using near-field arrays of loudspeakers [1,2] or monopole sources [3] have been proposed to reproduce acoustic (DAF) and acoustic + convective (TBL) components of a wall pressure field. From a numerical point of view, the strategy is almost similar: trying to replace costly numerical methods such as CFD by less demanding ones based on a statistical description of pressure fields. The conventional way to compute the vibro-acoustic response of a panel is to couple incompressible large eddy or detached eddy simulations for the pressure field and a finite element model for the panel response [4]. These numerical approaches are highly computation demanding and make researches find alternative approaches accurate and versatile for computation of vibro-acoustic panel response. Taking advantage of empirical models for the cross power spectral density (Corcos, Chase, Mellen [5]), Hekmati *et al.* [6] proposed a method based on the Cholesky decomposition and Karimi *et al.* [7] combined the uncorrelated wall plane wave technique and a finite element model.

In the framework of the VIRTECH ANR project, both experimental and numerical aspects are addressed. This project aims at developing and promoting such alternative approaches. The strategy is here to design experimental approaches taking advantages of the targeted application. For example, if the aim is to perform jury testing to evaluate the sound quality of different panel designs, the filtering effect of the structure as well as the one of human hearing have to be taken into account to avoid reproducing components of the wall pressure field that will be finally filtered out and will not contribute to radiated sound pressure fields. The same holds for a numerical synthesis: which empirical model (eg. Corcos, Chase, Mellen) or which probability function of the wall pressure excitation (Gaussian or non Gaussian) should be used when dealing with sound perception? To address such issues, a highly configurable and efficient approach is needed to produce a pressure respecting the desired characteristics.

Robin *et al.* [8, 9] proposed to couple a statistical space-time synthesis approach to a deterministic model to compute sound transmission loss (TL) of an isotropic and plane panel submitted to DAF or TBL excitations as well as its radiated sound pressure. The objective of the present work is to illustrate that the case of a stiffened panel can be easily and efficiently studied using this approach. Results in the frequency domain are reported.

2. SYNTHETIZED SPACE-TIME RANDOM EXCITATIONS

According to the procedure detailed in [8, 9], samples of two different pressure fields have been computed:

- Field 'A': a Diffuse Acoustic Field (see Fig. 1). The targeted pressure field is the one of a diffuse field, defined in the wavenumber domain by

$$P_{DAF}(k_x, k_y, \omega) = S_{pp}(\omega) \quad \forall |k| < \omega/c_0 \qquad (1)$$
$$P_{DAF}(k_x, k_y, \omega) = 0 \quad \forall |k| > \omega/c_0$$

  where ω is the angular frequency, c_0 is the speed of sound and $S_{pp}(\omega)$ is the pressure auto-spectrum. In the following, $S_{pp}(\omega) = 1$ Pa^2.

- Field 'B': a homogeneous and stationary turbulent boundary layer (see Fig. 2) with no pressure gradient over a smooth wall generated by a low speed subsonic Mach number flow ($M_\infty = 0.12$). The wavenumber-frequency power spectrum is imposed according to the Mellen model for a free flow speed of 40 m/s. Decay rate values are extracted from the literature, see Table 1.

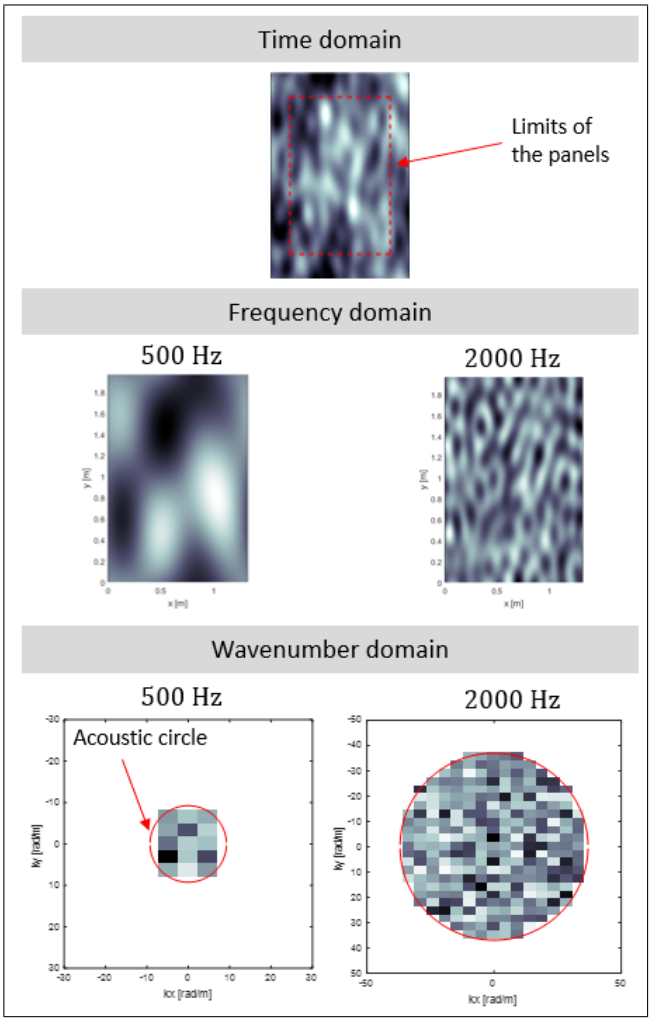

Figure 1. Synthetized field 'A' - Diffuse Acoustic Field.

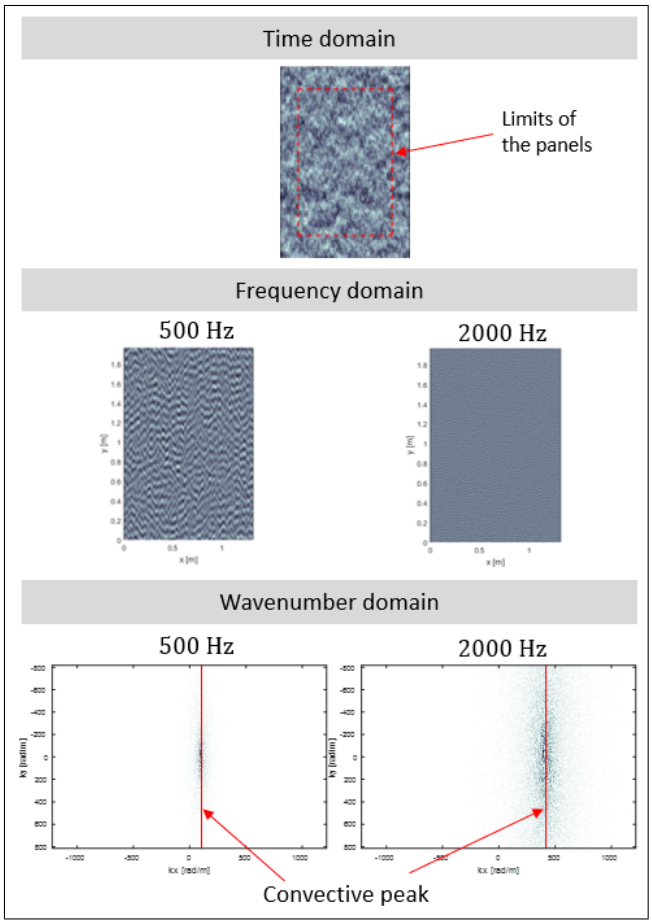

Figure 2. Synthetized field 'B' - Turbulent Boundary Layer.

The detailed characteristics of the generated pressure fields are listed in Tab. 1. In both cases, a sample of a pressure field over the spatio-temporal domain $L_x \times L_y \times T$ can be generated as a draw of a stochastic process using a spectral synthesis method, as explained in [8, 9].

Parameters	DAF	TBL
Temperature [°C]	20	
Ambiant pressure [Pa]	1.013E5	
Sound speed c_0 [m/s]	343	
Flow speed U_∞ [m/s]	/	40
Convection velocity U_c [m/s]	/	30
Spanwise decay rate α [-]	/	0.12
Streamwise decay rate β [-]	/	0.7
Spanwise dimension L_x^F [m]	1.3174	
Streamwise dimension L_y^F [m]	1.9642	
Numerical size of the fields	512 × 512	
Duration [s]	4	2
Number of time steps [-]	16384	8192

Table 1. Parameters of the synthetized pressure fields 'A' and 'B'.

As can be seen in Figs. 1 and 2, the imposed wavenumber-frequency power spectra are well retrieved in the syn-

thetized fields. It is underlined that the drawn fields represent a single sample of the stochastic process. However, they respect imposed characteristics like wavenumber pressure field in the acoustic circle for the DAF and appearance of a convective peak for the TBL. Each realization can thus be considered as a virtual experiment and can be used to perform a virtual test (and later used for listening purposes).

3. SYSTEM UNDER STUDY

In the following, the vibro-acoustic responses of two different panels excited by synthetized fields A and B are simulated. Panel 1 is a a rectangular thin clamped plate of dimensions $L_x^C \times L_y^C$ (see Fig. 3). The second has similar dimensions to panel 1 but includes longitudinal and transverse stiffeners. The rivets used to fix the stiffeners to the plate are modeled by rigid links. Transverse stiffeners are linked to the plate through junctions as can be seen in Fig. 4.

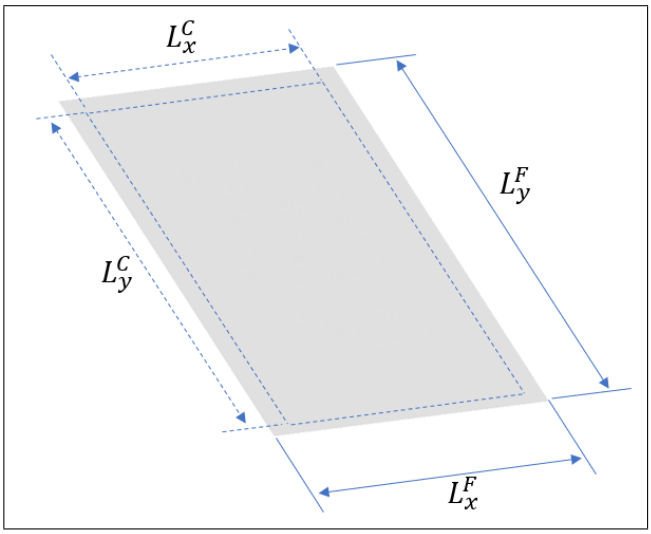

Figure 3. System under study 1: clamped rectangular thin plate.

Both panels are made of aluminum (Young's modulus $E = 75$ GPa, density $\rho = 2650$ kg/m^3, Poisson ratio $\nu = 0.3$). They have clamped boundary conditions on each of their and have dimensions $L_x^C = 0.96$ m and $L_y^C = 1.5$ m (that is excluding the clamping zone). The thickness of the main plate is in both cases $h = 1.45$ mm. The stiffeners have a thickness of 2 mm. The ratios between dimensions of the synthetized pressure field and the ones of the panels are $L_x^F/L_x^C = 1.37$ and $L_y^F/L_y^C = 1.31$.
The convergence of finite element models have been verify up to a frequency of 2000 Hz for the computation of the frequency responses of panels. As the pressure field and structure meshes do not coincide, the pressure field is interpolated on the structural mesh using linear interpolation functions. To compute the acoustic radiation of the panels, a semi-ellipsoidal finite volume is defined and a layer of infinite elements is added to ensure Sommerfeld free field radiation condition.

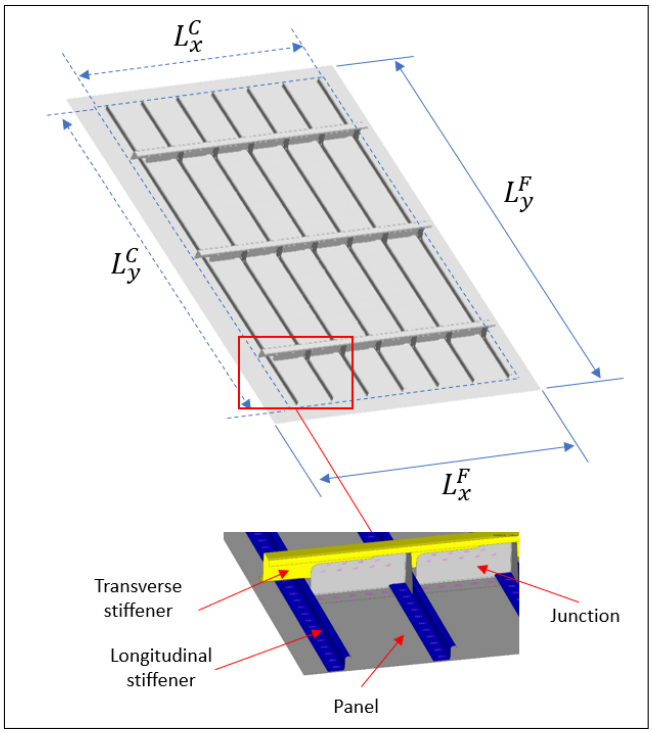

Figure 4. System under study 2: clamped rectangular stiffened plate.

4. PANEL RESPONSES

The complete simulation procedure allows computing time or frequency vibratory responses of the panels as well as the time or frequency acoustic responses (sound pressure, sound intensity, radiated acoustic power, transmission loss). In the following, only the transmission loss will be presented as an example and a first validation of the procedure for the case of stiffened panels.
Fig. 5 summarizes the results obtained: the sound Transmission Loss is plotted for the four possible combinations of panels and excitation, *i.e.* panel 1 excited by pressure fields A and B and panel 2 excited by pressure fields A and B. As it can be noticed in Fig. 5, when excited by DAF, the well-known +6 dB/octave trend (mass law) is observed below the acoustic coincidence frequency ($f_c = 7800$ Hz here) as well as a modal behavior at low frequency. When excited by a TBL, the transmission loss of the panel appears to be much more important than the one observed with DAF excitation. At 2000 Hz, the TBL transmission loss is 20 dB higher than the DAF one. This effect, due to smaller correlation lengths, has already been reported by Cacciolati *et al.* [10]. Fig. 6 presents a similar comparison taken from [10] between DAF- and TBL-induced transmission loss curves.
Interestingly, it appears that adding longitudinal and transverse stiffeners does not affect much the acoustic performance of the panel. By only considering the mass law, the TL of the stiffened panel should be larger than the one of the bare panel (the stiffened plate is almost 80 % heavier than the bare plate). Here, the most important parameter is the added stiffness: anti-peaks (and so eigenfre-

quencies of the stiffened panel) are shifted to higher frequency (approximately 10 Hz to 30 Hz for the first vibration mode). Therefore, the acoustic signature of the stiffened panel should be different from the one of the bare panel even if they have nearly equivalent TL values in the 200-2000 Hz frequency range.

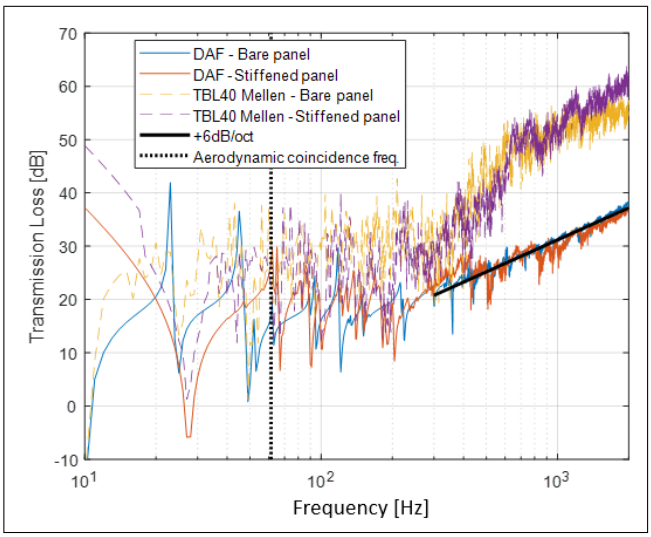

Figure 5. Transmission Loss as a function of frequency of panel A (bare panel) and B (stiffened panel) excited by DAF or TBL.

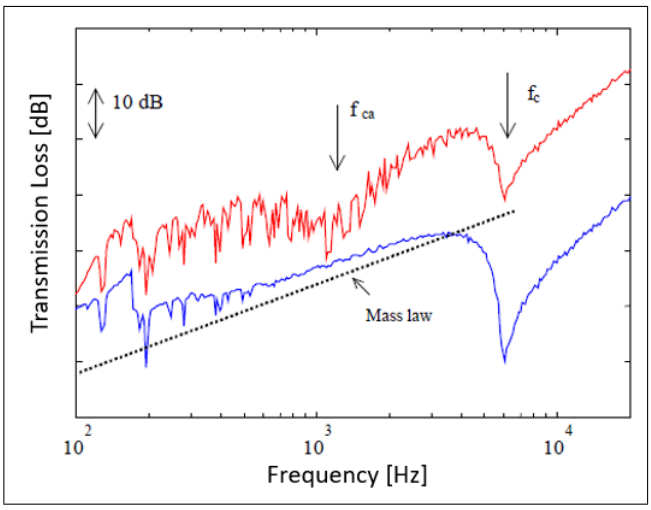

Figure 6. Transmission Loss as a function of frequency. Taken from [10]

The procedure presented in this paper can be used to evaluate influences of damping or mechanical design on vibroacoustics of structures and the perception of radiated sound from these structures. In opposite, jury testing could be used to evaluate which empirical model better represents perceived radiated sounds. Also, this procedure can be for example used to evaluate if it is worth taking into account non Gaussian probability density functions for the wall pressure excitation.

5. CONCLUSIONS

The present work intends to show how synthetized space-time random excitations coupled to finite element method can be used to compute vibroacoustic responses of various types of panels. This space-time, 2D+t, synthesis approach can be used to produce unique or consecutive draws of Diffuse Acoustic Fields or Turbulent Boundary Layers. Each of these realizations can be considered as a virtual experiment. In that way, the radiated sound pressure as a function of time or frequency and beneath a random excitation can be calculated as a function of time, and used for listening purposes.

As an example, it is shown here the acoustic performance of a stiffened panel is comparable to the one of the corresponding bare panel in given frequency bands. However, from a perceptive point of view, the acoustic signature of the panel may be highly different.

6. ACKNOWLEDGEMENTS

This work was performed within the framework of the Labex CeLyA of "Université de Lyon" (ANR-10-LABX-0060/ANR-11-IDEX-0007) and of the VIRTECH project (ANR-17-CE10-0012), operated by the French National Research Agency. The support of "Laboratoire International Associé - Centre d'Acoustique Jacques Cartier" (supported by the French National Research Agency) is also acknowledged. Finally, the authors thank Pierre Chainais for his fruitful suggestions that rooted this work.

7. REFERENCES

[1] T. Bravo and C. Maury, "A synthesis approach for reproducing the response of aircraft panels to a turbulent boundary layer excitation," *Journal of the Acoustical Society of America*, vol. 129, no. 1, pp. 143–153, 2011.

[2] O. Robin, A. Berry, and S. Moreau, "Experimental vibroacoustic testing of plane panels using synthesized random pressure fields," *Journal of the Acoustical Society of America*, vol. 135, p. 3434, 2014.

[3] L. M. Matthieu Aucejo and J.-L. Guyader, "Experimental simulation of turbulent boundary layer induced vibrations by using a synthetic array," *Journal of Sound and Vibration*, vol. 331, no. 6, pp. 3824–3843, 2012.

[4] H. Yao and L. Davidson, "Vibro-acoustics response of a simplified glass window excited bythe turbulent wake of a quarter-spherocylinder body," *Journal of the Acoustical Society of America*, vol. 145, no. 5, pp. 3163–3176, 2019.

[5] M. K. Bull, "Wall-pressure fluctuations beneath turbulent boundary layers: some reflections on forty years of research," *Journal of Sound and Vibration*, vol. 190, no. 3, pp. 299–315, 1996.

[6] A. Hekmati, D. Ricot, and P. Druault, "Numerical synthesis of aeroacoustic wall pressure fields over a flat

plate: Generation, transmission and radiation analyses," *Journal of Sound and Vibration*, vol. 332, no. 13, pp. 3163–3176, 2013.

[7] M. Karimi, P. Croaker, L. Maxit, O. Robin, A. Skvortsov, S. Marburg, and N. Kessissoglou, "A hybrid numerical approach to predict the vibrational responses of panels excited by a turbulent boundary layer," *Journal of Fluids and Structures*, vol. 92, p. 102814, 2020.

[8] O. Robin, M. Pachebat, N. Totaro, and A. Berry, "Évaluation d'une méthode de synthèse spectrale 2d+t pour la transparence de parois sous champ acoustique diffus," in *Proc. of CFA / VISHNO2016*, (Le Mans, France), 2016.

[9] O. Robin, M. Pachebat, N. Totaro, and A. Berry, "Vibroacoustic testing of panels under a turbulent boundary layer excitation using a space-time spectral synthesis approach," in *Proc. of FLINOVIA 3*, (Lyon, France), 2019.

[10] C. Cacciolati, P. Nèple, E. Guyader, J.-L. Guyader, and N. Totaro, "Comparison of the vibroacoustic behavior of a rectangular thin plate excited by a diffuse sound field and a turbulent boundary layer," in *Proc. of ICSV13*, (Vienna, Austria), 2006.