HAL
open science

Stability control of a wheel-legged mini-rover

Christophe Grand, Faiz Ben Amar, Frédéric Plumet, Philippe Bidaud

To cite this version:

Christophe Grand, Faiz Ben Amar, Frédéric Plumet, Philippe Bidaud. Stability control of a wheel-legged mini-rover. CLAWAR'02 : 5th Int. Conf. on Climbing and Walking Robots, 2002, Paris, France. pp.323-330. hal-03135889

HAL Id: hal-03135889

https://hal.science/hal-03135889v1

Submitted on 9 Feb 2021

HAL is a multi-disciplinary open access archive for the deposit and dissemination of scientific research documents, whether they are published or not. The documents may come from teaching and research institutions in France or abroad, or from public or private research centers.

L'archive ouverte pluridisciplinaire **HAL**, est destinée au dépôt et à la diffusion de documents scientifiques de niveau recherche, publiés ou non, émanant des établissements d'enseignement et de recherche français ou étrangers, des laboratoires publics ou privés.

Stability control of a wheel-legged mini-rover

C. Grand, F. Ben Amar, F. Plumet and Ph. Bidaud
Laboratoire de Robotique de Paris, Université de Paris VI
18, route du Panorama, 92265 Fontenay-Aux-Roses, France
E-mail: grand@robot.jussieu.fr

Abstract: This paper deals with the optimisation of locomotion performances of vehicle used for planetary exploration. First, the design of a reconfigurable mini-rover is described. Then, a control process that optimizes both the stability and the global traction performances is developed. Simulation results showing the rover stability performance are also presented.

Keywords: hybrid locomotion, reconfiguration, force balance, stability, wheel-ground interaction.

1 Introduction

Future planetary exploration missions will require mobile robots which are able to carry out high-performance locomotion tasks while insuring the system integrity. The locomotion of such rovers on uneven surfaces involves complex wheel-ground interactions which are related to the geometrical and physical soil properties: map roughness, rocks distribution, soil compaction, friction characteristics, etc... Enhancement of locomotion performances in such environment needs to design innovative rovers and to search for original control schemes, by taking these interactions into account.

Outdoor mobile robots design can be roughly split in two main ways of research: wheeled machines and legged machines. Main activities concerning the first categorie of vehicles are the design of active suspension[9], whereas control aspects are the main problems for the second. There exist now an interest for a new type of vehicle which inherits both advantages of wheeled and legged vehicles, namely the high velocity and payload of the first one and the high adaptive capabilities of the second ones[2]. These systems offer rough terrain adaptation capabilities based on the system reconfigurability and are able to perform hybrid locomotion like peristalsic mode[10].

This paper presents the design of a reconfigurable mini-rover[6] and an original algorithm which perform an optimisation control of both the rover static-stability and the

global traction performance. The first section is a short description of the rover design. The second one presents the rover stability control algorithm that enhance the rover stability and forces balance. Then, this method is validated through simulations which are performed on a simulation tool that integrates complex interactions between rover and soft soil.

2 The mini-rover design

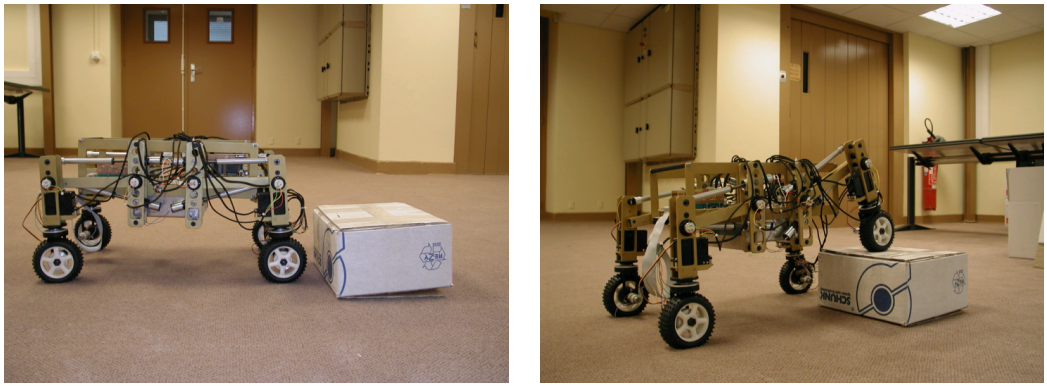

Figure 1: Illustrations of the mini-rover structure

The mini-rover prototype shown in figure 1, is approximately 40 cm long and weights 10 kg. It is a high mobility redundantly actuated vehicle. It has four legs each combining a 2 DOF suspension mechanism with a steering and driven wheel. The leg, shown in figure 2b, is driven by two electrical linear actuators. This mechanism can be seen as a large displacement active suspension.

The mini-rover is equipped with: two inclinometers to get information on platform orientation and a 3 components force sensor on each leg to measure contact forces. Four control-boards based on a 80c592 micro-controller are dedicated to the low-level control of each leg (four DOF controlled by each one). A PC-104 board is used for high-level control such as attitude control, load and traction forces balance, generation of different locomotion mode (rolling mode, peristaltic mode, ...). Communications between the PC and micro-controllers are achieved by a CAN bus.

This mini-rover was developed to provide an experimental platform to study the optimisation of rover locomotion performances on granular medias such as sandy soils. The actuated mobilities provide the system the ability: to permanently maintain the four wheels on the ground during displacements on uneven surfaces, to increase ground clearance, to increase the stability and the traction by controlling force balancing through the reconfiguration of the mini-rover. Moreover, this kinematic structure allows the use of secondary locomotion modes namely peristaltic mode (crawling motion)[7], and high obstacle clearing mode based on a coordinated wheel-leg motion.
One of the central objectives in the development of such technology is to investigate self-adaptation of the locomotion mode relatively to the terrain characteristics. This investigation is based on the observation of the internal state of the vehicle, the wheel-ground interactions and the local environment.

3 Rover stability control

In this section, we will first describe briefly the rover kinematics. Secondly, we will develop the criteria which optimise both the rover stability and the traction forces distribution. Then, an original velocity model based control of the rover platform attitude is described.

3.1 Rover kinematics

The orientation of the platform frame $\mathcal{R}_1$ is given by three angles with respect to the fixed frame $\mathcal{R}_0$, which are the conventional roll-pitch-yaw angles (ϕ,ψ,θ). The rover center-of-gravity (c.o.g) is denoted G and will be considered as fixed in platform frame. This approximation can be made by considering that the leg mass is small compared to the mass of batteries and other electronic equipments. The configuration of each leg is described by a set of parameters (α_i , β_i) defined in figure 2b. The rover reconfiguration is obtained by controlling this set of leg parameters.

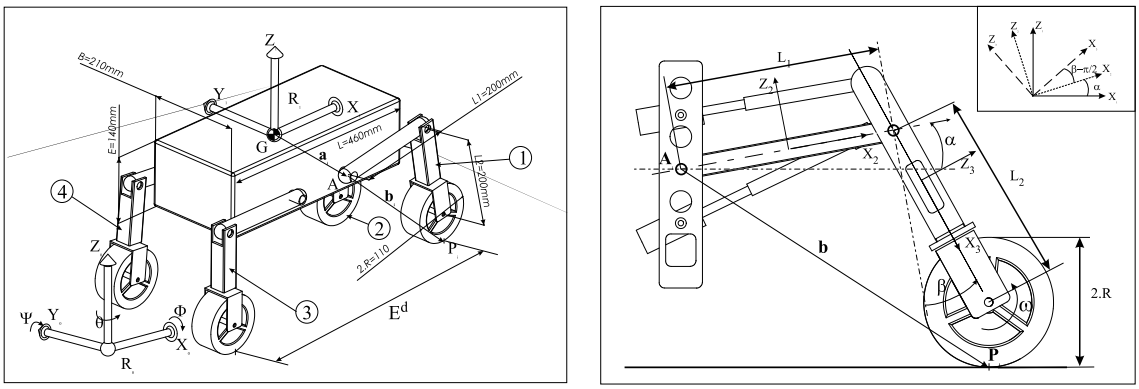

(a) (b)

Figure 2: (a) General kinematics of the mini-rover, (b) detailed kinematics of a wheeled suspension.

Let us consider $\mathbf{b}_i$ the vector joining connection point A_i to the wheel-ground contact point P_i in the sagittal plane in $\mathcal{R}_1$, and $\mathbf{a}_i$ the vector which defines position of each leg connection point A_i with respect to the platform frame $\mathcal{R}_1$.

$$\mathbf{a}_i = \left[\begin{array}{ccc} x_i & y_i & z_i \end{array}\right]^t \quad \text{and} \quad \mathbf{b}_i = \left[\begin{array}{ccc} X_i & 0 & Z_i \end{array}\right]^t \tag{1}$$

For each leg, relative position of the wheel $\mathbf{b}_i$ is expressed as a function of leg parameters, and $\mathbf{a}_i$ is a constant vector defined by the rover design:

$$\begin{array}{rcl} X_i & = & \big(l_1 \cos(\alpha_i) + l_2 \cos(\gamma_i)\big) \\ Z_i & = & -\big(l_1 \sin(\alpha_i) + l_2 \sin(\gamma_i) + R\big) \end{array} \tag{2}$$

where $\gamma_i = \alpha_i + \beta_i - \frac{\pi}{2}$. Let us consider $\mathbf{x}'_1$ a normalized vector defined as the projection of $\mathbf{x}_1$ in the horizontal plane ($\mathbf{x}_0$,$\mathbf{y}_0$). Then, in the sagittal plane, we define the desired wheelbase E^d (fig. 2a) which is the relative position of contact point P_i for each sideways couple of wheels along $\mathbf{x}'_1$ axis. The desired wheelbase is the same on the left and right

side. For each leg, we consider the parameter E_i which is the distance between the rover c.o.g and the contact point P_i along $\mathbf{x'}_1$ axis:

$$E_i = (x_i + X_i)\ \mathbf{x_1} \cdot \mathbf{x'_1} \tag{3}$$

3.2 Combined criteria for traction and stability optimisation

When the system is moving, the tangential plane of wheel-ground contact is difficult to determine from the force sensor measurements. Thus, we will assume that contact planes stay horizontal, i.e., the ground is represented instantaneously by four discrete horizontal planes with different altitudes. Furthermore, each leg is supposed to be in contact with the ground. This assumption is justified by the use of an independent force feedback control on each one.

The aim of the control algorithm is to reach the most stable configuration from the current rover state. In these conditions and by considering static analysis of forces distribution, we can assume that the rover stability is maximum when vertical component of contact-forces are equal on each leg. It is well known that vertical contact-forces balance can be reached by minimizing the projected distance, on horizontal plane, between the rover c.o.g and the geometric center of wheel-ground contacts. Moreover, this criterion also optimizes the traction force distribution. Consequently, if the ground is locally homogeneous in terms of its physical properties, the global traction of the propulsion system is enhanced.

Since the gauge is constant for the particular design of this rover, it is clear that the sideways force balance, in the front view, is obtained by constraining the platform roll angle to zero :

$$F_{z_1} + F_{z_3} = F_{z_2} + F_{z_4} = \frac{P}{2} \iff \phi = 0, \tag{4}$$

where F_{z_i} is the vertical force at the ith wheel-ground contact and P is the total rover weight. The second constrain concernes forces balance in the sagittal plane, on right and left sides. For a specified wheelbase E^d, the forces balancing criterion is verified if:

$$F_{z_i} = \frac{P}{4} \iff E_i = \frac{E^d}{2} \tag{5}$$

The third condition concernes the rover ground clearance value Z_g, computed from measure of (α_i, β_i) with the equation (2). Control algorithm consists to reach the desired value Z_g^d:

$$Z_g = Z_g^d \quad \text{where} \quad Z_g = \frac{1}{4} \sum_i (Z_i) \tag{6}$$

The platform orientation is also constrained to stay in an horizontal plane $(\mathbf{x}_0, \mathbf{y}_0)$. This is needed for scientific measures or stable vision system. This constrain is necessary to make the system controllable and leads to: $\psi = 0$.

3.3 Velocity model based control

For a continuous optimisation of the rover stability, we propose a velocity model based control of the system. Let denote $\mathbf{V}_r = \{V_x, V_y, V_z\}$ and $\mathbf{\Omega}_r = \{\Omega_x, \Omega_y, \Omega_z\}$ the screw components which define the relative motion of $\mathcal{R}_1$ with respect to $\mathcal{R}_0$, and $\mathbf{V}_i = \{V_{x_i}, 0, V_{z_i}\}$ the velocity of each wheel center with respect to $\mathcal{R}_1$.

Thus, vertical velocity V_{z_i} of each point A_i could be expressed as a function of linear velocity $\mathbf{V}_r$ and angular velocity $\mathbf{\Omega}_r$ of the rover platform:

$$V_{z_i} \;=\; \Omega_x\, y_i - \Omega_y\, x_i + V_z\,, \tag{7}$$

and the horizontal velocity component is controlled in such way to reach a constant wheelbase E_i through a proportional feedback:

$$V_{x_i} \;=\; -K_{v_x}\,(E_i - \frac{E^d}{2})\,, \tag{8}$$

where K_{v_x} is a constant gain.

The aim of the attitude control algorithm is to force the platform orientation to be horizontal and to control the rover ground clearance. This is achieved through, first the control of its angular velocity:

$$\mathbf{\Omega}_r = \begin{bmatrix} \Omega_x = -K_\psi\,\psi \\ \Omega_y = -K_\phi\,\phi \\ \Omega_z = 0 \end{bmatrix}_{\mathcal{R}_1}, \tag{9}$$

and secondly, the control of the ground clearance Z_g:

$$\mathbf{V}_r = \begin{bmatrix} V_x = 0 \\ V_y = 0 \\ V_z = -K_{v_z}\,(Z_g - Z_g^d) \end{bmatrix}_{\mathcal{R}_1}, \tag{10}$$

where ϕ and ψ are the measured pitch and roll angles and Z_g is computed from the measure of $(\alpha_i,\, \beta_i)$. K_{v_z}, K_ϕ and K_ψ are constant gains.

The velocity of each wheel center can be expressed as a function of $(\alpha_i,\, \beta_i,\, \dot{\alpha}_i,\, \dot{\beta}_i)$ in the rover sagittal plane $(\mathbf{x}_1,\, \mathbf{z}_1)$. Since the velocity of each point A_i in $\mathcal{R}_1$ is related to the velocity of the wheel center, we can write:

$$\begin{pmatrix} V_{x_i} \\ V_{z_i} \end{pmatrix} = \mathbf{J}_i(\alpha_i,\, \beta_i) \begin{pmatrix} \dot{\alpha}_i \\ \dot{\beta}_i \end{pmatrix} \quad \text{and} \quad \mathbf{J}_i(\alpha_i,\, \beta_i) = \begin{bmatrix} -l_1\,\sin(\alpha_i) & -l_2\,\sin(\gamma_i) \\ l_1\,\cos(\alpha_i) & l_2\,\cos(\gamma_i) \end{bmatrix} \tag{11}$$

Then, by setting desired wheelbase E^d and ground clearance Z_g^d from an high level planning algorithm, each leg are controlled. The aim is to minimize Z_g^d and maximize E^d under geometrical rover-ground collision constraint:

$$\begin{pmatrix} V_{x_i} \\ V_{z_i} \end{pmatrix} = \mathbf{F}_i\,(E_i,\, Z_g) \;\text{ and }\; \begin{pmatrix} \dot{\alpha}_i \\ \dot{\beta}_i \end{pmatrix} = \mathbf{J}_i^{-1} \begin{pmatrix} V_{x_i} \\ V_{z_i} \end{pmatrix} \tag{12}$$

4 Simulation and evaluation of the stability control

In this section, we present the simulation and evaluation of the rover stability control algorithm. We introduce evaluation metrics of the rover stability and the vertical contact-forces balance. Then, we describe results of simulations performed with a simulator that integrates the whole dynamics of the rover and its interactions with the environment.

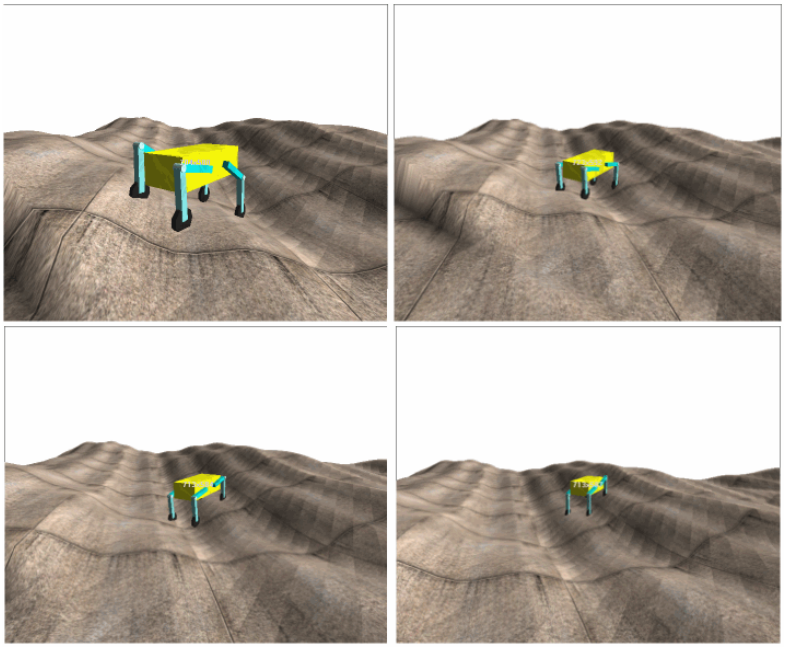

Figure 3: Illustrations of the motion simulation with stability control.

4.1 Evaluation criteria

In order to qualify the proposed rover stability control algorithm a measure of the stability is necessary. Definition of stability metrics for mobile robots evolving on uneven surface has been investigated by previous authors. This is a recurrent problem specially in the case of legged robots or mobile manipulators [1, 12].

In section 3.2, we had considered the distance between c.o.g and geometric center of wheel-ground contact as a criterion for a combined optimisation of the rover stability and the global traction. Instead, for a pure stability evaluation that is independent of the traction, we consider a more sophisticated metric. So, a stability margin metric that takes rover altitude into account is needed because of the high unevenness of considered terrains. In our evaluation, the stability margin defined by Papadopoulos[11] is used.

This technique can be summarized as follow: the line joining each consecutive terrain-contact point P_i define a tipover axis. The vector $\mathbf{l}_i$ joining the rover c.o.g. G to the center of each tipover axis is computed. Then angles θ_i between each $\mathbf{l}_i$ and the gravitational force vector $\mathbf{f}_g$ are computed as the stability angle over each tipover axis. The overall rover stability margin is defined as the minimum of all the stability angles:

$$\text{Stability margin} \quad : \quad m_s = \min\{\theta_i, i = 1..n\} \tag{13}$$

A second metric is used to quantify the balance of contact-forces between each wheel and the ground. This is an adimensional index defines as follow :

$$\text{Forces distribution index} \quad : \quad C_f = \frac{\min(F_{z_i})}{P/4} \tag{14}$$

The index takes values from zero to one. The maximum value is obtained when the force balance is optimal and it is zero when at least one leg is not in contact with the ground.

4.2 Implementation and simulation results

In the aim to evaluate the locomotion performances of planetary rover, we have developed a simulator[8, 3] that takes into account the dynamics of mobile robot, and also the dynamic behaviour of soft soil. Interaction models between rover wheels and soils are also integrated. This simulator allows to evaluate the dynamic behaviour of mobile robot evolving on different terrains from the case of rigid surface to the case of soft soil like sand. Geophysical properties of the ground are experimentally defined by a triaxial test performed on a sample of soil[5]. The computation of the ground geometry is based on frequency synthesis that allows realistic artificial terrain [4]. By observing natural forms, it was established that landscape forms have an A/f^p frequency spectra where A defines the roughness and p relates to the fractal dimension. So, by using the spatial inverse Fourier transform of this spectral signal, an altitudes map of considered terrain is computed. Figure 3 gives illustations of the motion simulation with stability control.

These simulations present the same initial conditions in terms of soil properties and rover state. Horizontal displacements of the rover are defined through a velocity control, the ground velocity is 30 cm/sec. The two simulations concerne the case of a fixed configuration rover and the case of reconfigurable rover using the stability control.

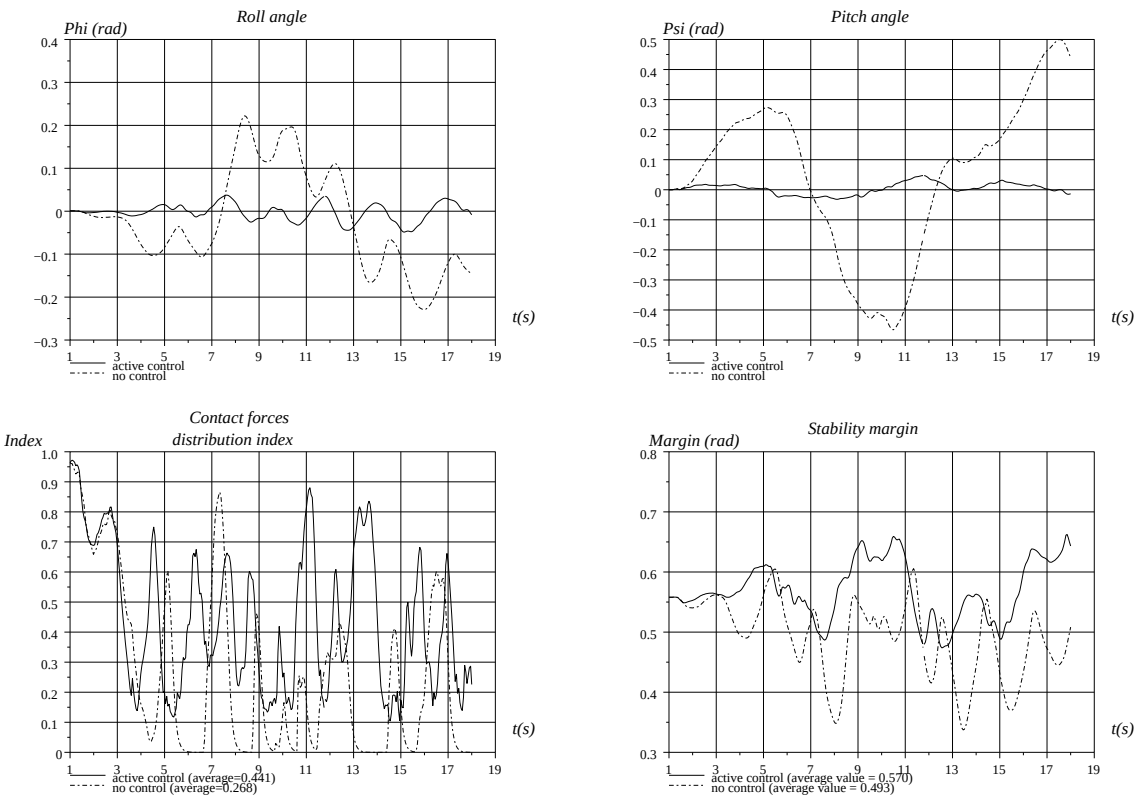

Figure 4: Simulation results of a locomotion task on rough terrain, with and without the use of stability control.

Simulation results are shown in the figure 4. The mean stability of the system performing stability control is 17% greater than with a fixed configuration of rover. The minimum

stability value is 27° in the case where stability control is used, and is 19° in the other case. This represents an enhancement of the minimum stability margin about 40%.

Concerning the vertical forces balance index, the mean value of this index is increased by about 64% when the stability control is active. Without the stability control, the force feedback control on each wheel is not active, so all the wheel are not necessary in contact with the ground. This case appears, when index value equals zero. When the stability control is used the index value is alway greater than zero, so the preliminary assumption we made in section 3.2 about the constant wheel-ground contact on each leg, is verified.

5 Conclusion

An original velocity based algorithm that improved both the global traction and the stability performances of a reconfigurable rover has been presented. This method is simple to implement and needs only few sensors which are: inclinometers for the pitch and the roll measurements and position sensors for the leg mechanism. This algorithm has been validated through simulations, and illustrates the capabilities of such redundantly actuated rover to enhance its own integrity and thus its autonomy on critical environments.

References

[1] A.Ghasempoor and N.Sepehri. A measures of machine stability for moving base manipulators. In *Proceedings ICRA's of the Int. Conf. on Robotics and Automation*, pages 2249–2254, 1995.

[2] A.Halme, I.Leppänen, S.Salmi, and S.Ylönen. Hybrid locomotion of a wheel-legged machine. In *Proceeding CLAWAR's of the International Conference on Climbing and Walking Machine*, Madrid, 2000.

[3] G. Andrade Barroso. *Modélisation et Adaptation du Mouvement de Robot Tout-Terrain.* PhD thesis, Université de Paris VI, 2000.

[4] B.Mandelbrot. *The fractal geometry of nature.* W.H. Freeman, 1982.

[5] Braja M. Das. *Advanced Soil Mechanics.* Taylor and Francis, ISBN 0-89116-980-6 1983.

[6] F.BenAmar, V.Budanov, Ph.Bidaud, F.Plumet, and G.Andade. A high mobility redundantly actuated mini-rover for self adaptation to terrain characteristics. In *Proceedings CLAWAR's, 3th International Conference on Climbing and Walking Robots*, pages 105–112, 2000.

[7] G.Andrade, F.BenAmar, Ph.Bidaud, and R.Chatila. Modeling wheel-sand interaction for optimization of a rolling-peristaltic motion of a marsokhod robot. In *Proceedings IROS's International Conference on Intelligent Robots and Systems*, pages 576–581, 1998.

[8] C. Grand, F. Ben Amar, P. Bidaud, and G. Andrade. A simulation system for behaviour evaluation of off-rooad mobile robots. In *Proceedings CLAWAR's of the International Conference on Climbing and Walking Robots*, pages 307–314, Germany, 2001.

[9] A.L. Kemurdjian. Planet rover as an object of the engineering design work. In *Proceedings ICRA's of the International Conference on Robotics and Automation*, pages 140–145, Belgium, 1998.

[10] K.Iagnemma, A.Rzepniewskia, S.Dubowsky, P.Pirjanianb, T.Huntsbergerb, and P.Schenker. Mobile robot kinematic reconfigurability for rough-terrain. In *Proceedings SPIE's International Symposium on Intelligent Systems and Advanced Manufacturing*, August 2000.

[11] E.G. Papadopoulos and D.A. Rey. A new mesure of tipover stability for mobile manipulators. In *Proceedings ICRA's of the Int. Conf. on Robotics and Automation*, pages 3111–3116, 1996.

[12] S. Sugano, Q. Huang, and I. Kato. Stability criteria in controlling mobile robotic systems. In *Proceedings ICRA's of the Int. Conf. on Robotics and Automation*, pages 832–838, 1993.