HAL
open science

Advanced European Re-Entry System Based on Inflatable Heat Shields: Technology Roadmap and Technical challenges (EFESTO project)

Giuseppe Governale, Davide Bonetti, Ingrid Dietlein, Giovanni Gambacciani, Giuseppe Guidotti, Ysolde Prevereaud, Nicole Viola

To cite this version:

Giuseppe Governale, Davide Bonetti, Ingrid Dietlein, Giovanni Gambacciani, Giuseppe Guidotti, et al.. Advanced European Re-Entry System Based on Inflatable Heat Shields: Technology Roadmap and Technical challenges (EFESTO project). IAC 2020 - 71st International Astronautical Congress, Oct 2020, Online, Spain. pp.60084. hal-03122695

HAL Id: hal-03122695

https://hal.science/hal-03122695v1

Submitted on 8 Feb 2021

HAL is a multi-disciplinary open access archive for the deposit and dissemination of scientific research documents, whether they are published or not. The documents may come from teaching and research institutions in France or abroad, or from public or private research centers.

L'archive ouverte pluridisciplinaire **HAL**, est destinée au dépôt et à la diffusion de documents scientifiques de niveau recherche, publiés ou non, émanant des établissements d'enseignement et de recherche français ou étrangers, des laboratoires publics ou privés.

Copyright ©2020 by the International Astronautical Federation (IAF). All rights reserved.

IAC-20-D1.1.1

Advanced European Re-Entry System Based on Inflatable Heat Shields Technology Roadmap and Technical challenges (EFESTO project)

G. Governale[d]*, D. Bonetti[a], I. Dietlein[b], G. Gambacciani[c], G. Guidotti[e], Y. Prevereaud[f], N. Viola[d]

[a] *DEIMOS Space S.L.U., Tres Cantos, Spain*
[b] *Deutsches Zentrum für Luft- Und Raumfahrt e.V. (DLR), Köln, Germany*
[c] *AVIOSPACE SRL, Turin, Italy*
[d] *Department of Mechanical and Aerospace Engineering, Politecnico di Torino, Turin, Italy*
[e] *Centro Italiano Ricerche Aerospaziali (CIRA), Capua, Italy*
[f] *Office National d'Etudes et de Recherches Aerospatiales (ONERA), Toulouse, France*
* Corresponding Author: giuseppe.governale@polito.it

Abstract

The payload capability and the landing sites for Mars exploration missions may be boosted using inflatable decelerators. Similarly, these may allow recovering launcher upper stages for Earth re-entry enabling reusability.

The EFESTO project, funded by the European Union programme H2020, aims at raising the European TRL of Hypersonic Inflatable Aerodynamic Decelerators. It includes design, development, and test for the flexible TPS (F-TPS) and the inflatable structures of the heat shield for atmospheric entry missions, as well as validation of tools used in the project. The project culminates with the design of an In-Orbit Demonstration (IOD) mission, setting the basis for a technology development programme. Within EFESTO, the technology roadmap, planning the necessary development activities, is generated to support the European strategic decisions in this field. A rational and logical methodology is proposed for the technology roadmap generation, considering the robustness of the result and the influence of the chosen parameters through sensitivity analysis. Multi-attribute theories are considered and implemented to include features of different nature and the preference among them. An ad hoc database of the past, present, and planned efforts in the field of atmospheric entry systems is developed and implemented in the process.

The technology roadmap defined responds to the multiple technical challenges identified in the different disciplines involved: system aspects, addressing geometric and functional integration of critical uncommon sub-systems as the F-TPS and the inflatable structure in folded state, concerning the available volume and cross-section, and during re-entry conditions in consideration of the centre of gravity position and related impact on flight stability and control; aerothermodynamic aspects, strong fluid-structure interactions along the atmospheric entry which are critical for the TPS design; materials and structures aspects related with not yet matured technologies including the design of a flexible thermal protection sheet able to withstand the peak heat fluxes experienced during entry, as well as a suitable underlying inflatable structure that allows maintaining the optimal aerodynamic shape during the entirety of the mission; mission and GNC aspects, controlled entry on Earth combined with parafoil descent and Mid-Air Retrieval and ballistic entry combined with supersonic retro propulsion for Mars.

Purpose of this paper is to propose a methodology to define the technology roadmap for a hypersonic inflatable aerodynamic decelerator, addressing the main technical challenges and giving the incremental technology development to cope with them.

This project has received funding from the European Union's Horizon 2020 research and innovation programme under grant agreement No 821801.

Keywords: Technology Roadmaps, Flexible TPS, Inflatable Structure, Aerodynamic Decelerators, EDL.

Acronyms/Abbreviations

Angle of Attack (AoA), Attitude and Vernier Upper Module (AVUM), Centre of Gravity (CoG), Cold Gas Generator (CGG), Descent and Landing (D&L), European Flexible hEat Shields: advanced TPS design and tests for future in-Orbit demonstration (EFESTO), European Space Agency (ESA), Flexible thermal protection system (F-TPS), Guidance Navigation and Control (GNC), Horizon 2020, is the financial instrument implementing the Innovation Union, a Europe 2020 flagship initiative aimed at securing Europe's global competitiveness (H2020), Hypersonic Inflatable Aerodynamic Decelerator (HIAD), Inflatable Aerodynamic Decelerator (IAD), In-Orbit Demonstrator (IOD), Mars Orbiter Laser Altimeter (MOLA), National Aeronautics and Space Administration (NASA), Supersonic Retro-Propulsion (SRP), Thermal Management System (TMS), Thermal Protection System (TPS), Technology Readiness Level (TRL), United Launch Alliance (ULA).

Copyright ©2020 by the International Astronautical Federation (IAF). All rights reserved.

1. Introduction

In the development of a new concept several technical challenges arise. The EFESTO project aims at providing advances in the three areas of thermal control, materials, and structures by the design and testing of innovative inflatable TPS solutions for re-entry vehicles. It will enable new space mission concepts, which require bringing a payload from space to ground of a planetary body with an atmosphere beyond the current limits imposed by launcher fairing size or rigid heat shields geometrical and structural aspects. Morphing solutions will allow for example landing bigger or heavier payload on Mars or will enable the reusability of launchers' upper stages enhancing European reusability and cost reductions in the access to space industry. Non space applications in the areas of materials and structures will also be considered. Leveraging on the consortium background and on past, current and planned tests results in the field, competitiveness in the space sector will be fostered and key contributions to the long-term European re-entry technology roadmap will be provided. EFESTO will advance from the current European state of art to the preparation of an IOD mission, overall increasing the TRL of this technology in Europe. Two main applications (Mars Robotic Exploration and Reusable Small Launchers Upper Stages) for the EFESTO technology have been carried out in the mission design process, that included the system design, TPS, structure, and aerothermodynamic simulations.

For the Mars Application, the robotic exploration mission class resulted in a 10 m diameter IAD class, with about 6600 kg of entry mass, and a BC of about 50 kg/m². The current mission (see parallel IAC paper D2.3.4 for more details [1]) foresees a direct Mars entry and combines the use of hypersonic IAD (HIAD) in a ballistic entry with Supersonic Retro-Propulsion (SRP, activated about Mach 2.3) to deliver about 2500 kg of payload at a landing altitude of MOLA +2 km.

For the Earth Application, the VEGA upper stage (AVUM) has been selected as baseline study case. The current mission foresees a deorbiting from SSO orbit, a controlled lifting entry phase (BC of about 30 kg/m2) and combines the use of hypersonic IAD (HIAD, 4.5m diameter class) with parachutes and parafoil for Mid-Air-Capturing (MAR) with an helicopter. Refurbishment of the recovered stage is planned as necessary step before a re-flight of the launcher stage.

Following the ongoing design phases, the next project steps will include laboratory tests as preparatory activities for a future In-Orbit Demonstrator mission. Test in DLR arc-heated facility LBK will be reconstructed by numerical simulations to assess the heat and mass transfer interaction between the material and the flowfield. Test in CIRA facility of the inflatable structure will be reconstructed by numerical simulation to validate structural models.

Placing the future IOD mission in the context of a broader and longer-term technology context is also one of the project goals, open and willing to find synergies with ongoing and future efforts in the European context. This paper gives an overview of the project main technical challenges and present a preliminary roadmap to place EFESTO in the worldwide context.

2. Aerothermodynamics

From an aerothermodynamic point of view, strong fluid-structure interactions are encountered along the atmospheric entry leading the team to face 3 technical challenges.

The first concerns the simulation of fluid-structure interactions (see Fig. 1), simultaneously considering the thermal coupling between the flow and material, the surface recombination of the chemical species according to the wall catalysis and the wall oxidization.

The second challenge is related to the evaluation for the Mars mission of the radiative heat transfer from the shock layer.

Finally, the third challenge is linked to the estimation of the turbulence effect on the wall heat transfer.

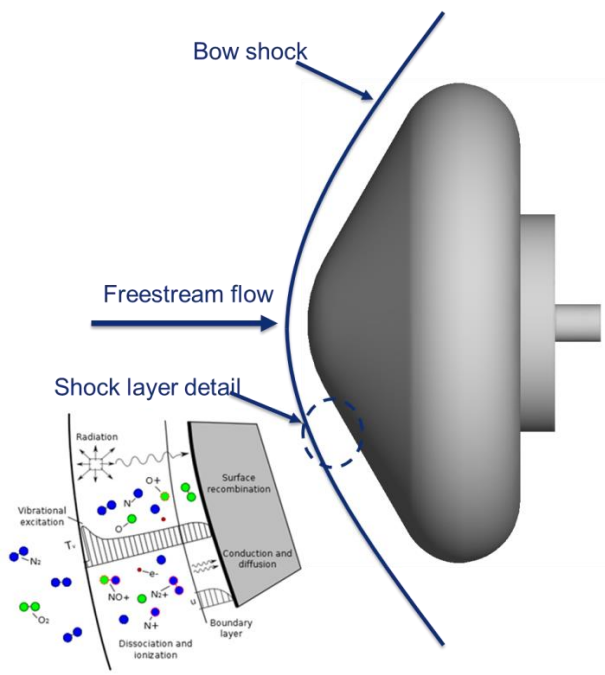

Fig. 1. Aerothermodynamics aspects.

Due to the inflatable structure enveloped with the flexible TPS material, the shape of the body wall might be a source of instabilities. The deformed surface could promote boundary layer transition leading to an

Copyright ©2020 by the International Astronautical Federation (IAF). All rights reserved.

important heating increase due to turbulence mechanism.

The next EFESTO outcomes will be:

- Validation of the CFD simulations, including fluid-structure interactions, by comparison with results from the arc jet experiments. These simulations will include heat transfer mechanism (convective, diffusive, and radiative) related to hypersonic non-equilibrium flows (CEDRE, CFD ONERA code). Moreover, the material response will be investigated thanks to coupling CFD and material codes (MoDeTheC ONERA code, allowing to simulate the thermochemical behaviour of materials)
- Ground-to-flight Extrapolation
- Study of the complete atmospheric entry using engineering code (ARES) coupling flight dynamics, aerothermodynamics, thermal response of the material.

3. F-TPS

EFESTO is hence challenged in the design of a flexible thermal protection system able to withstand the peak heat fluxes experienced during entry.

The F-TPS must simultaneously:

- withstand high temperatures (up to 1800ºC)
- reject the incident heat (up to 600kW/m2)
- avoid transmission of heat to the underneath structures
- do not allow gas penetration from the environment
- exhibit flexibility and foldability

The real possibility of making such a membrane and its final performance (weight and size) depends on the characteristics of the materials used. There is no material able to fully satisfy, on its own, all the requirements listed above: typically F-TPS are multi-layer structures where the outer layer, the one that interacts with the external environment, it's exposed to the highest temperature, and the inner layers are built to prevent the diffusion of heat in order to isolate and protect the internal structures of the system.

Therefore, the final goal is to achieve an integrated stack-up of different materials able to work as a very efficient flexible thermal barrier and fulfil all the requirements.

In details, the most important challenges are:

- the development of a faithful simulation methodology of the thermal behavior of a multi-layer and multi-material system
- the characterization of the materials from a mechanical point of view, and the development of a methodology of simulation to predict the final stiffness and shape of the complex membrane
- the manufacturing of the F-TPS: the raw materials are available as small blankets (1 – 2 m wide, typically), while the final assembly is a cone-shaped structure more than 10m wide
- the design of the interfaces between rigid TPS and flexible TPS: the main issue here is due to the fact that rigid TPS structures are extremely hot and can assume only elementary geometries
- the design of the interfaces with the support and tensioning structure: those structures are typically designed to work at low-temperature but requires complex shapes to fix the F-TPS and distribute the load correctly as well as lead it during deployment

Different configurations are hence analysed and tested throughout the project (Fig. 2).

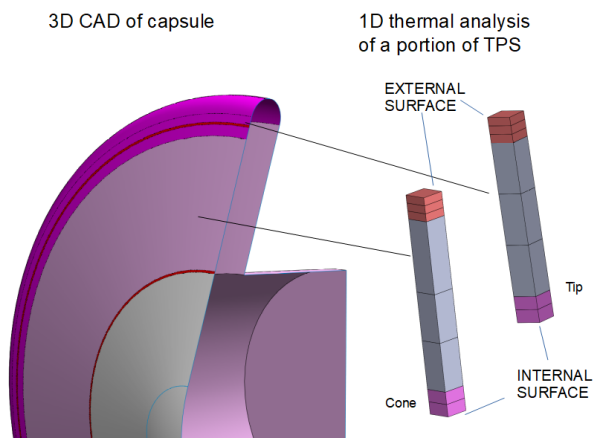

Fig. 2. F-TPS membrane.

4. Inflatable structure

The literature IAD configurations based on multi-tori or stacked-toroid architectures imply some critical issues as:

- Non-scalability
- Structural indeterminacy and instability
- High complexity of assembly and integration
- High cost

The EFESTO project proposes the adoption of an innovative solution developed by Thin Red Line Aerospace (CIRA subco) and based on proprietary patent. The concept of "the Annulus shape-factor" configuration for both main and secondary inflatable volumes allows a more effective architecture eliminating the above criticalities (Fig. 3).

.

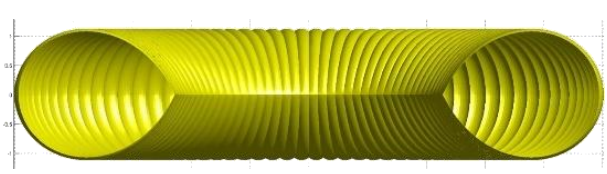

Fig. 3. Annulus inflatable structure.

Copyright ©2020 by the International Astronautical Federation (IAF). All rights reserved.

5. System design

The challenges at system level are related to addressing the geometric and functional integration of critical and unconventional sub-systems such as the F-TPS and the inflatable structure in folded state Notable challenges to be addressed and to be overcome by the team during the design process are:

- Conflicting requirements with respect to the lateral position of the centre of gravity (CoG) during ascent and descent. A minimum angle of attack (AoA) during re-entry is necessary to generate sufficient lift in order to meet precise target conditions at parachute deployment. This requires a specific CoG lateral offset from the longitudinal axis of the re-entry compound. At the same time, launcher requirements dictate a maximum allowed lateral offset for the payload in order to maintain the entire launch system within controllable limits, see [3]. To this issue several solutions can be envisaged, for instance:
    - A trim mass for re-entry plus an additional trim mass for ascent counterbalancing the re-entry trim mass. For the present design this approach is selected as the baseline solution.
    - A movable mass system. A suitable drive would move the trim mass from a neutral position assumed during ascent to the desired lateral position prior to re-entry.
    - A HIAD geometry that assumes the shape of a cone that is tilted with respect to the stage when inflated. In this manner, the longitudinal position of the stage CoG will act will partially have the effect of a lateral displacement with respect to the cone axis during re-entry.
- Integration of the folded HIAD in ascent configuration with the commercial VEGA payload on top while providing sufficient volume to the packed HIAD
- Integration of the Descent & Landing system to the stage.

The architecture for Earth application in re-entry configuration with the inflated HIAD is shown in Fig. 4. The cold gas generator (CGG) and the chute containers composing the descent & landing (D&L) system are laterally positioned in order to reduce the need of the additional re-entry trim mass. This trim mass could be positioned just on the outer side of the chute containers and ideally serve as a thermal protection to the D&L system during re-entry.

The major mass contributions to the system mass is shown by Fig. 5.

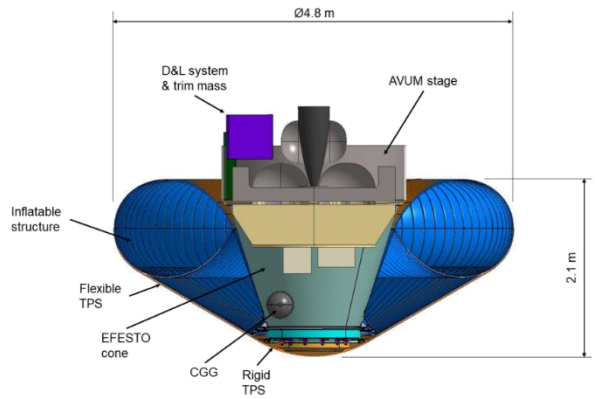

Fig. 4. System configuration for Earth application.

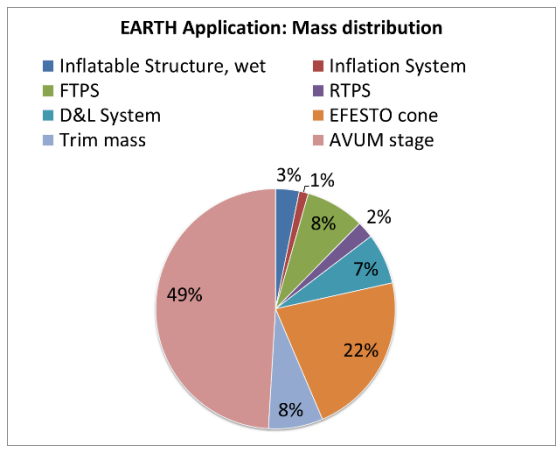

Fig. 5. Mass breakdown for Earth application (re-entry configuration).

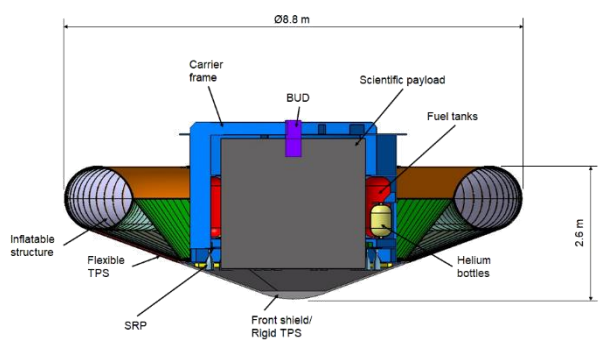

Fig. 6. System configuration for Mars application.

Architecture challenges on system level are smaller for Mars due to a larger degree of freedom at this stage of study for this application. A cut of the virtual 3D model of the current design of the Mars application in re-entry configuration is shown in Fig. 6. It shall be

Copyright ©2020 by the International Astronautical Federation (IAF). All rights reserved.

noted that only the descent module is part of the design work within EFESTO.

The study case application for an exploration mission to Mars adopts a similar approach to landing a scientific payload on Mars as the Mars Science Laboratory by lowering it to the surface in a crane-like manoeuvre from a carrier frame (for the concept of operations see Fig 9). The carrier frame also provides an interface to the propulsion and fluid system and stowage volume for the HIAD in folded state.

The scientific payload, the carrier frame and the subsystems of the descent module will be thermally shielded by a rigid TPS and the flexible TPS covering the Inflatable System itself. The HIAD and the front shield will be separated at approximately Mach 2.3 prior to engine ignition for the final descent.

The baseline configuration foresees to use of the shelf thrusters such as the Aerojet Rocketdyne's MR-80B3100 [3] for the Supersonic Retro-Propulsion (SRP) system to be fuelled by hydrazine. This thruster can be throttled between 31 N and 3601 N making it particularly suitable for the envisaged descent strategy. In case a higher performance is required it may be considered to switch to using N2O4/UDMMH as bi-propellant combination.

The mass distribution can be consulted in Fig. 7.

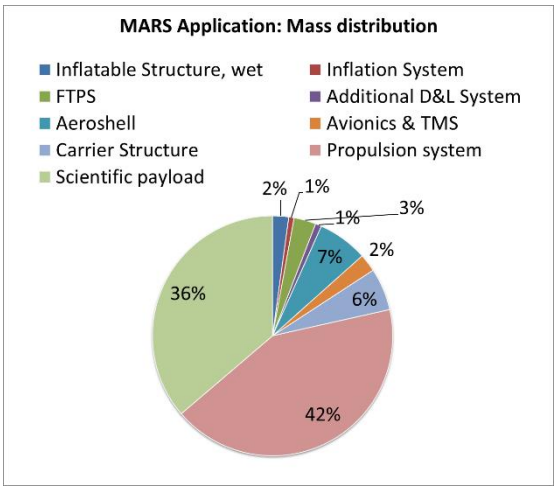

Fig. 7. Mass breakdown for Mars application (re-entry configuration).

6. Mission and GNC challenges

The mission phase of main interest for the EFESTO project is the Entry phase, where the HIAD, focus of the project, is primarily operating. In Fig 8 and Fig 9 the concept of operations for both the Earth and Mars scenarios for the entry phase is shown, where the HIAD works in combination with other technologies to achieve an end to end feasible mission.

For the Earth application, the main challenges lay on achieving a precise landing, to recover and reuse the AVUM (following refurbishment on ground). To achieve the recovery, the GNC aspects are critical, and a controlled entry combined with a parafoil descent and Mid-Air Retrieval (MAR) is conceived. The current mission requires a relatively accurate deorbiting manoeuvre as additional new feature with respect to current AVUM design. Refurbishment of the recovered stage is planned as necessary step before a re-flight of the launcher stage. Demonstrating in flight the feasibility of these mission operations will be required for the confirmation of a successful business case; so far the target set is to limit the position dispersion at MAR within the range capability of one single helicopter.

The Mars application instead, foresees a ballistic entry combined with supersonic retro propulsion (SRP, activated about Mach 2.3), to achieve delivering of 2500kg of payload at a landing altitude of MOLA +2km. The HIAD alone cannot slow down the vehicle to terminal conditions, and the propulsion has to assist the power landing of this mission, from low supersonic to ground (hovering when the payload is released under a skycrane manoeuvre, similar to NASA MSL).

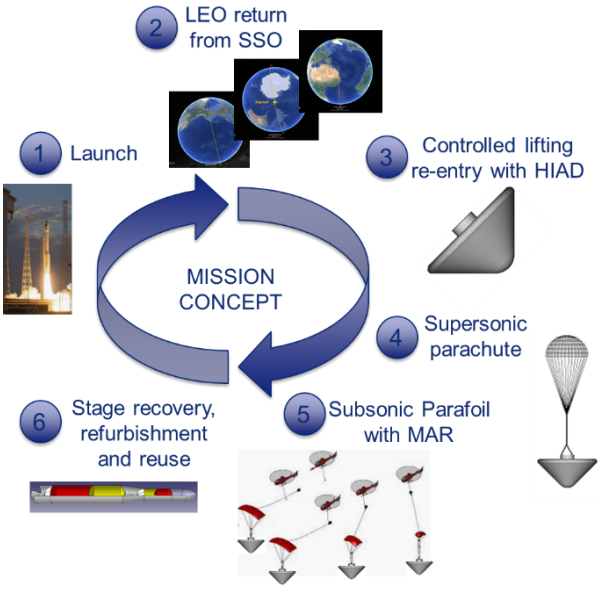

Fig 8: Earth application: concept of operations.

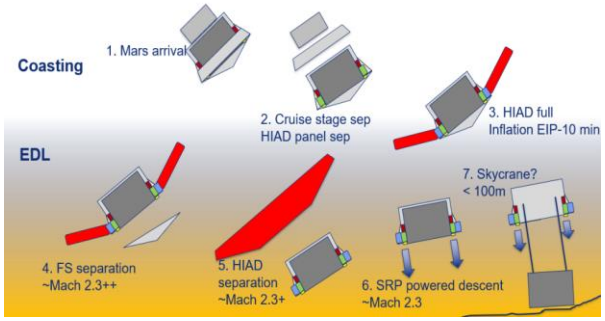

Fig 9: Mars application: concept of operations.

Copyright ©2020 by the International Astronautical Federation (IAF). All rights reserved.

7. Preliminary technology roadmap

A technology roadmap places the project in the worldwide context suggesting the step by step development for the European effort in the field. The roadmapping methodology includes stakeholder analysis, elements identification, prioritisation of the potential scenarios and technologies, planning definition, roadmap analysis.

At this stage of the project, the Consortium had identified and characterise the elements involved for the development of an inflatable aerodynamic decelerator (IAD). These will serve to the generation of the technology roadmap.

A relatively large number of relevant technologies have been identified (more than 25), and the technology groups most related to the project and the operational capabilities identified are (according to the ESA Technology Tree [5]):

- Structural Material Concepts
- Joining Technologies For Inflatable and Deployable Structures
- New Advanced Hot Structures Materials
- Landing Attenuation Technologies
- Reusable Subsystems
- Coatings and Insulation
- Thermal Analysis of Materials

In particular, the project focuses on the development of flexible structural and TPS material.

During the development, some system and performance parameters are considered to evaluate the state of the development. The main are identified as: the decelerated payload, the inflatable system stowing and deploying properties, the F-TPS performances. These parameters are used during the trade-off analyses to choose among different scenarios and concept evolutions.

A survey of space missions and programmes in the same technology domains has been performed. A timeline spanning from 1996 to 2025 has been populated with the data retrieved (more than 70 relevant programmes). The number and distribution of such programmes in the timeline is proof of the common interest and need in developing the aerodynamic decelerator technologies.

The NASA's HIAD IRVE programme demonstrated the feasibility of the inflatable spacecraft technology with the stacked torus design of diameter up to 3.5 m. However, the flight program allowed post-flight reconstruction and comparison with design tools predictions. Post-flight analysis was mainly focused on trajectory [6], aerodynamics and attitude control system performance [7]. For structural point of view, successful deployment and inflation of the heat shield was achieved at an apogee of 469 km at the beginning of the IRVE-3 flight [7]. However, since the flight trajectories of the IRVE program are less critical (Mach 10 for IRVE-3) than the target one, F-TPS resistance to heat transfer and mechanical constraints cannot be validated. Investigations in these areas are, up to now, limited to ground experiments [8][9].

The EFESTO annulus concept is the present moment of the inflatable technology development, where the Arc jets tests on the F-TPS together with the structural models and tests will provide breakthrough knowledge for future IOD missions.

Among the future programmes, it is worth mentioning LOFTID by ULA and NASA [1], that will demonstrate second-generation F-TPS materials and higher diameters (6 m) of the inflatable decelerators. The LOFTID system is the most similar to the EFESTO concept, it may be considered its European analogue. It is however remarked that while ULA aims at suborbital applications (recovery of Vulcan 1st stage engines), EFESTO pushes the technology to re-entry from orbit, targeting applications for upper stages of small launchers, at higher altitude and velocity ranges.

Further development, to enable the mission scenarios proposed, sees the need of an IOD mission in the midterm. For this aim, a potential EFESTO 2.0 is advised. The mentioned programmes are represented in the preliminary technology roadmap in Fig. 10, with respect to the programmes timeline divided in current, +5 years, and +10 years. At the end of this roadmap the mission scenarios are represented.

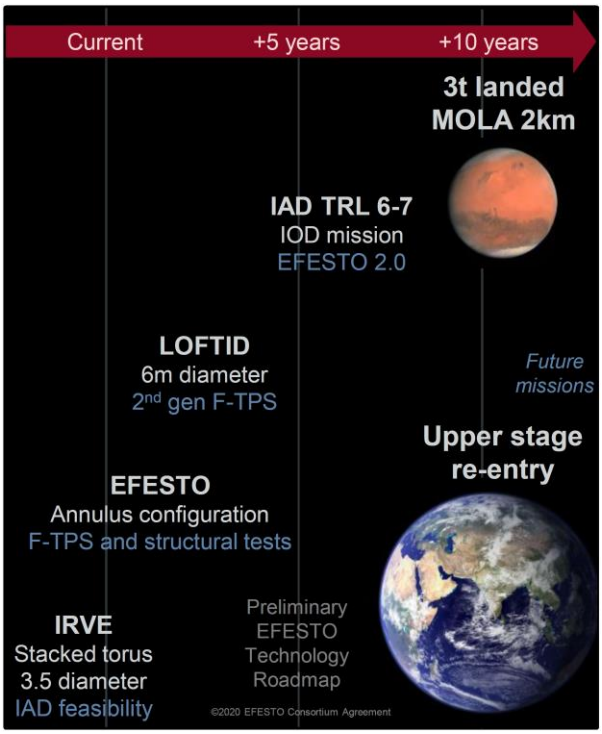

Copyright ©2020 by the International Astronautical Federation (IAF). All rights reserved.

Fig. 10. EFESTO preliminary technology roadmap.

The development activities will enable larger inflatable aerodynamic decelerators and hence they will increase the space exploration capabilities. Moreover, the EFESTO project outcomes may serve not only to the missions mentioned, i.e. the Earth and Mars application, but it could be studied also for integration to future space exploration missions involving other planets or natural satellites.

The Technology Readiness Level (TRL) of materials yet under development is monitored as for the potential integration in the further development of the IAD concept and its configurations.

The EFESTO outcomes may be a gamechanger for the European entry capabilities, for both robotic and human space exploration allowing to land heavier payload at higher Mars altitudes or to recover launch assets back on Earth.

8. Conclusions

EFESTO main technical challenges and technology development have been presented.

Concepts design for Earth and Mars inflatable heatshields applications are under development. The technologies explored in EFESTO are expected to have a promising impact on future missions, including breakthrough performance improvements in Mars exploration and real possibility of applications for future reusable launcher concepts, notably for the European VEGA launcher upper stage AVUM.

Beyond space missions, the innovation introduced in flexible TPS and inflatable structures can find applications on multiple other fields, in particular in fire protection solutions.

The next steps following the concept design will include the completion of the detailed design, laboratory tests and preparatory activities for a future in-orbit demonstration mission.

Placing this future mission in the context of a broader and longer-term technology roadmap is also one of the project goals, open and willing to find synergies with ongoing and future efforts in the European context.

Two workshops will be organized and hosted by Politecnico di Torino as dissemination and outreach activities to both technical and non-technical public (target dates: Q1 2021 and Q1 2022). More information will be available at: http://www.efesto-project.eu.

Acknowledgements

This project has received funding from the European Union's Horizon 2020 research and innovation programme under grant agreement No 821801. More information available at https://cordis.europa.eu/project/id/821801

The EFESTO consortium acknowledges essential contributions of TRLA Aerospace Canada and ALI Scarl Italia.

References

[1] D. Bonetti et all, "Advanced European Re-Entry System Based on Inflatable Heat Shields Detailed Design (EFESTO project)" 71st International Astronautical Congress (IAC) – The CyberSpace Edition, 12-14 October 2020.

[2] Dillman, R. A. DiNonno, J. M. Bodkin, R. J. Hughes, S. J. "Planned Orbital Flight Test of a 6m HIAD". 15th IPPW. 2018.

[3] Arianespace. "Vega User's Manual". Issue 4 Revision 0. April 2014.

[4] Aerojet Rocketdyne. "In-Space Propulsion Data Sheets, Monopropellant and Bipropellant Engines," September 1019.

[5] J. Westman, ESA Technology Tree, version 4.0 ESA STM-277 3rd ed., April 2020.

[6] S. O'Keefe, D. Bose, "IRVE-II Post-Flight Trajectory Reconstruction" AIAA Atmospheric Flight Mechanics Conference, 02 August 2010 - 05 August 2010, Toronto, Ontario, Canada, https://doi.org/10.2514/6.2010-7515.

[7] A. Olds et all, "IRVE-3 Post-Flight Reconstruction", AIAA Aerodynamic Decelerator Systems (ADS) Conference, 25-28 March 2013, Daytona Beach, Florida, https://doi.org/10.2514/6.2013-1390.

[8] B. R. Hollis, "Aerothermodynamics of a Hypersonic Inflatable Aerodynamic Decelerator (HIAD) with Flexible TPS", 47th AIAA Fluid Dynamics Conference, 5-9 June 2017, Denver, Colorado, https://doi.org/10.2514/6.2017-3122.

[9] Lichodziejewski et all, "Design and Testing of the Inflatable Aeroshell for the IRVE-3 Flight Experiment", 53rd AIAA/ASME/ASCE/AHS/ASC Structures, Structural Dynamics and Materials Conference, 23 - 26 April 2012, Honolulu, Hawaii, https://doi.org/10.2514/6.2012-1515.

More information at: http://www.efesto-project.eu.