HAL open science

Thick fluid interface modelling

Roger Prud'Homme, Renée Gatignol

To cite this version:

Roger Prud'Homme, Renée Gatignol. Thick fluid interface modelling. International Journal of Thermal Sciences, 2004. hal-03041583

HAL Id: hal-03041583

https://hal.science/hal-03041583v1

Submitted on 5 Dec 2020

HAL is a multi-disciplinary open access archive for the deposit and dissemination of scientific research documents, whether they are published or not. The documents may come from teaching and research institutions in France or abroad, or from public or private research centers.

L'archive ouverte pluridisciplinaire **HAL**, est destinée au dépôt et à la diffusion de documents scientifiques de niveau recherche, publiés ou non, émanant des établissements d'enseignement et de recherche français ou étrangers, des laboratoires publics ou privés.

Thick fluid interface modelling[1]

Roger Prud'homme, Renée Gatignol[2]

Abstract
Basic concepts of interface and interfacial layer are flrst introduced. Orthogonal curviiinear coordinate analysis, used to study interfacial zones depending of time, is presented. Classical 3D and 2D thermodynarnical relations are reminded and second gradient formulation is introduced. General balance laws are written inside the interfacial layer and then, by using an asymptotic approach, balance laws are obtained for interfaces. The constitutive relations are deduced from thermodynamics of irreversible processes. More or less classical examples are given to illustrate the purpose.

Nomenclature

$\mathcal{A}_S^\alpha$	interfacial generalized force	
$\vec{e}_1, \vec{e}_2, \vec{e}_3$	unit basic vectors of the orthogonal curvilinear frame	
g^j	chemical potential per unit mass of the species j in a mixture	
$\vec{\mathcal{J}}_S^\alpha$	interfacial generalized flux	
j	wave number	m^{-1}
L_0	hydrodynamic scale m	
$L_S^{\alpha\beta}$	interfacial phenomenological coefficient	
n	normal coordinate at small scale	m
p_*	interfacial pressure	Pa
q	physical parameter	
S	entropy, interface	
S_3	coordinate surface	
t	time s	
$\vec{\vec{T}}$	bulk viscous stress tensor	Pa
U	velocity	m
$\vec{V}$	local fluid velocity	$m\ s^{-1}$
w	velocity of the surface S_3	$m\ s^{-1}$
$\vec{W}$	interfacial velocity equal to $\vec{V}_{//} + w\vec{e}_3$	$m\ s^{-1}$
x, y, z	Cartesian coordinates	m
x_1, x_2, x_3	curvilinear coordinates	m
$\vec{x}$	position of a point	m
Y^j	mass fraction of species j	
Greek symbols		
δ_0	interfacial thickness	m
ε	small parameter, $= \delta/L_0 << 1$	
λ	capillarity coefficient	$N\ kg^{-2}\ m^{-6}$
ψ	any property per unit mass	
ξ	normal coordinate at any scale	m
$\vec{\xi}$	unit normal to the interface	
ρ	fluid density	$kg\ m^{-3}$
σ	surface tension	$N\ m^{-1}$
$\vec{\vec{\Sigma}}$	bulk stress tensor	Pa
$[\![\varphi]\!]$	jump $\varphi_{II} - \varphi_I$	
Subscripts		
1, 2	both sides for superposed fluids	
I, II	lower and upper limits of an interfacial layer	
$,_i$	space derivative $\partial / \partial x_i$	
//, S	parallel to the interface	
$\perp$	normal to the interface	

1. Introduction

Interfaces are often seen as geometrical surfaces. But these surfaces have internal physical properties. They are the seat of multiple exchanges with their surrounding, i.e. the bulks in contact with them. Thermodynamical properties and balance laws of interfaces are not always simple to obtain. It is often necessary to work with several scales of analysis. At microscopic

[1] Published by Internal Journal of Thermal Sciences **43** (2004) 339-345)
[2] *Laboratoire de modélisation en mécanique, Université Pierre et Marie Curie, 4 Place Jussieu, 75252 Paris cedex 05, France.* Received 28 January 2003; accepted 21 August 2003

scale, 2D interfaces become 3D interfacial layers, where thermodynamical relations and balance equations must be written. A review is presented in our book [1].

In order to be clear we use the two designations: *interfacial layer* and *interface*. An interfacial layer is a region of space where strong gradients of some properties take place in a thin layer. At this small scale, the medium is three dimensional with generally non-classical properties. At the macroscopic scale, the interface is similar to a material surface with zero thickness, which exchanges matter, momentum and energy with the surrounding.

Interfacial modeling interested many authors. The states that exist in a thin intermediate and inhomogeneous layer between gas and liquid phases can be described by the fundamental equations of van der Waals's theory [2], if the temperature is below the critical temperature. In the famous paper of Cahn and Hilliard [3], the properties of a flat interfacial layer between two coexisting phases are determined. In particular it is proved that its thickness increases with increasing temperature and becomes infinite at the critical temperature. Other papers give the link between the molecular aspect and the continuum mechanics such as the review paper of Ono and Kondo [4] and the book of Rowlinson and Widom [5] The establishment of a direct link between capillarity phenomena and the intermolecular forces is based on the statistical mechanics of systems that are highly inhomogeneous on the scale of length of the range of these forces [5]. Much more sophisticated developments have been published in the basis of the so-called density function theory, for example, in the paper by Evans [6].

Interfacial fluid layers endowed with internal capillarity were also studied by Casal [7, 8], Germain [9]. Casal and Gouin [10], Seppecher [11] and Gatignol and Seppecher [12]. Concept of interface extended to stretched flames were considered by Klimov [13], Sivashinski [14], Clavin and Joulin [15], Prud'homme [16]. For the concept of an "interface" with internal energy per unit area, one can cite Delhaye [17], Scriven [18], and Slattery [19]. Rocard [20] gave a statistical approach and Casal, Gouin, Germain, Seppecher a macroscopic approach.

In many papers an emphasis is put on the different interfacial velocities. For the interface without mass, discussions were driven by Landau and Lifschitz [21], Bedeaux, Albano and Mazur [22], Napolitano [23], Prosperetti [24] and, for interfaces with surface mass, by Ghez [25, 26], Prud'homme [27]. In relation with the concept of an "interfacial layer", Ishii [28], Gogosov [29], Sanfeld and Steinchen [30] utilize true quantities, and on the contrary, Landau and Lifschitz, Meinhold and Heerlein [31] excess quantities. The concept of dividing surface was utilized by Gibbs [32], Slattery [33], and Defay et al. [34]. Many authors have established interfacial balance equations, but not always with the desirable strictness. One tries here to point out some crucial problems and suggest solutions.

2. Interface and interfacial layer

The concept of an interface is relative. Some material surface seams very thin at a given scale and appears to be thick at a smaller one (Fig. 1). As examples of interfacial layers and interfaces, one can mention various systems: a fluid layer endowed with capillarity and an interface with surface tension, a thin layer with diffusion of species between two miscible fluids, and so on. One considers here only fluid interfaces, i.e., themselves fluid, without rigidity, and located between bulk fluids.

Modeling of such interfaces means establishing equations of material surfaces (2D balance equations) and closing the obtained system by constitutive relations.

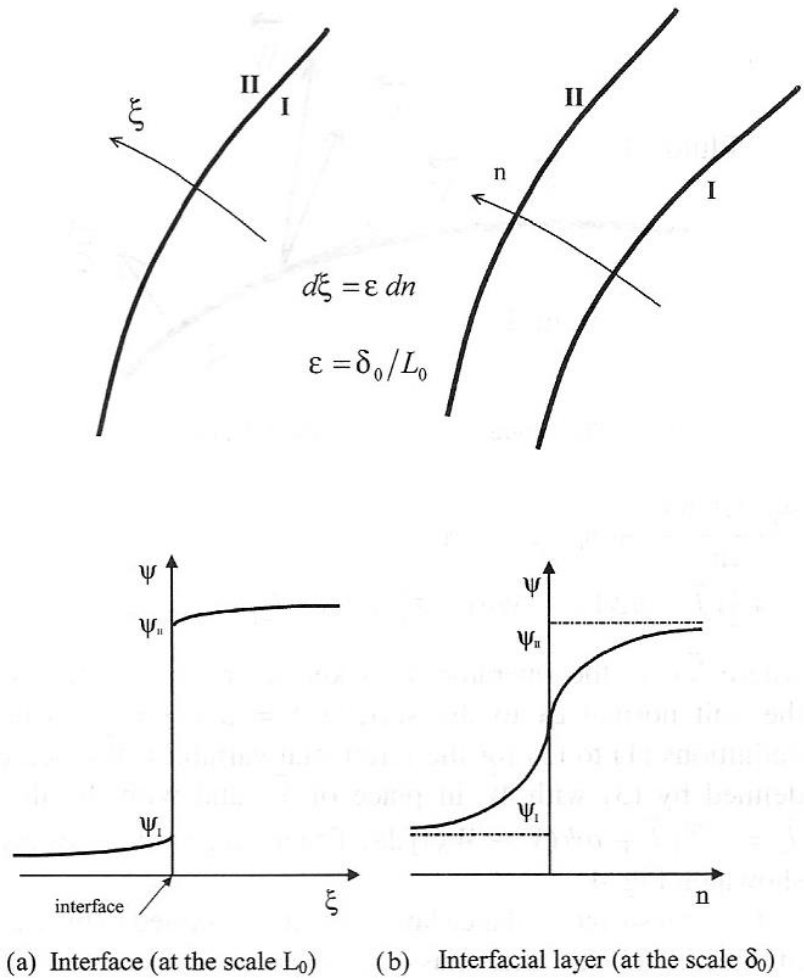

Fig. 1. Interface and interfacial layer.

2D interfacial quantities can be deduced from 3D analysis, by integration across the interfacial layer. Then, interfacial quantities ψ_a and ψ_S are deduced from local 3D quantities by integration between layer. It gets

$$\psi_a = \rho_a \psi_S = \int_{\xi_I}^{\xi_{II}} \rho \psi \, d\xi \quad (1)$$

with the surface density

$$\rho_a = \int_{\xi_I}^{\xi_{II}} \rho \, d\xi \quad (2)$$

Applying (1) to the fluid velocity i it gets

$$\rho_a \vec{V}_S = \int_{\xi_I}^{\xi_{II}} \rho \vec{V} \, d\xi \quad (3)$$

So $\vec{V}_S$ is the mean fluid velocity in the interfacial fluid, defining the velocity of the interface *S* at each point.

To calculate the integrals of the right hand member it is sometimes necessary to apply an asymptotic expansion method and to use a new coordinate n at smaller scale than ξ with $d\xi = \varepsilon\, dn$

$$\psi_a = \int_{\xi_I}^{\xi_{II}} \rho\psi \, d\xi \cong \varepsilon \int_{-\infty}^{+\infty} \rho\psi \, dn \qquad (4)$$

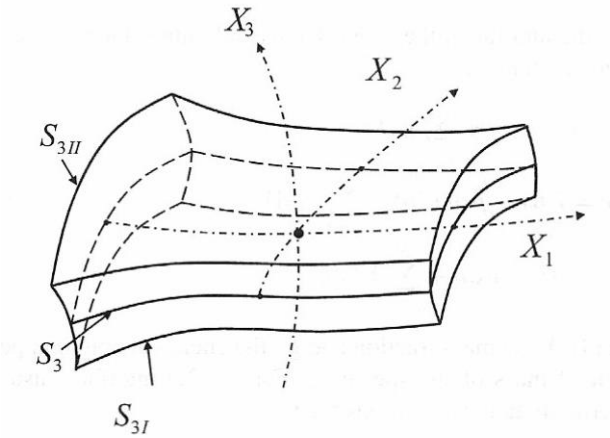

Fig. 2. Curvilinear orthogonal coordinates; coordinate surfaces.

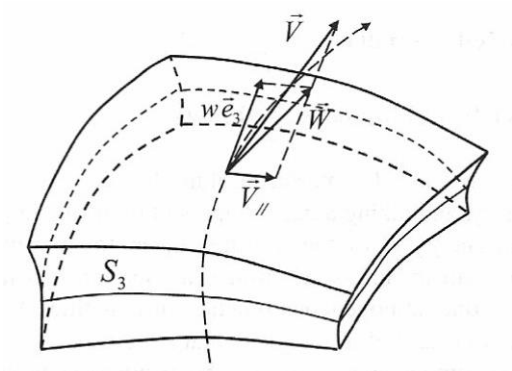

Fig. 3. Velocities inside the interface layer.

3. Orthogonal curvilinear coordinates

It is generally convenient to consider the interfacial layer as a stratified structure. On each surface of this structure we suppose that the value of a characteristic parameter q (local density, temperature or concentration) is constant. Use of a system of orthogonal curvilinear coordinates can be made, and each surface of the stratified structure, on which the characteristic parameter q remains constant, can be seen as a coordinate surface S_3 (x_3, t) or S_3 for a given value of x_3 at time t .

Let us consider the following moving curvilinear system

$$\begin{aligned} x &= x(x_1, x_2, x_3, t) \\ y &= y(x_1, x_2, x_3, t) \quad \text{or} \quad \vec{x} = \vec{x}(x_1, x_2, x_3, t) \\ z &= z(x_1, x_2, x_3, t) \end{aligned}$$

(5)

r, y and z being the Cartesian coordinates in an orthonormal basis ($\vec{i}, \vec{j}, \vec{k}$), x_1, x_2, x_3 the curvilinear coordinates and t the time. We call $\vec{h}_i$ the vector of components ($x_{,i}$, $y_{,i}$, z_i). For an orthogonal curvilinear system of coordinates, the vectors $\vec{h}_i, \vec{h}_j (i \neq j)$ are orthogonal. Dividing by the norm $\left|\vec{h}_i\right| = h_i$ we obtain the normalized vector $\vec{e}_i = \vec{h}_i / h_i$ and we define the curvilinear abscissa by $dX_i = h_i \, dx_i$ (Fig. 2).

The mean curvature of surface S_3 is then

$$\frac{1}{\delta S_3}\frac{\partial(\delta S_3)}{\partial X_3} = \vec{\nabla}\cdot\vec{e}_3 = \frac{1}{h_3}\left(\frac{h_{1,3}}{h_1} + \frac{h_{2,3}}{h_2}\right) \quad (6)$$

where δS_3 is a current surface S_3 element.

Projection operators can be defined [1] (for instance, one define $\vec{\vec{I}}_\perp = \vec{e}_3\,\vec{e}_3$ and $\vec{\vec{I}}_{/\!/} = \vec{\vec{I}} - \vec{e}_3\,\vec{e}_3$, and a local velocity $\vec{W}$ inside the interfacial layer is introduced (Fig. 3) by the formula

$$\vec{W} = \vec{V}_\parallel + w\vec{e}_3 \quad (7)$$

with

$$\vec{V}_{/\!/} = \vec{\vec{I}}\cdot\vec{V}, \quad \frac{\partial x}{\partial t} = \vec{h}_t, \quad w = \vec{e}_3\cdot\vec{h}_t$$

The stretch of a surface S_3 moving locally at velocity $\vec{W}$ is then

$$\frac{1}{\delta S_3}\frac{d_{\vec{W}}(\delta S_3)}{dt} = \vec{\nabla}\cdot\vec{W} - \vec{\nabla}_\perp\cdot\vec{W} = \vec{\nabla}_\parallel\cdot\vec{W} \quad (8)$$

with $\vec{\nabla}_\perp = \vec{\vec{I}}_\perp\cdot\vec{\nabla}$, $\vec{\nabla}_{/\!/} = \vec{\vec{I}}_{/\!/}\cdot\vec{\nabla}$ and where $d_{\vec{W}}/dt$ stands for the convective derivative associated to $\vec{W}$. Quantities defined by (6), (7) and (8) are very important for the interface description because they have physical meaning.

4. Thermodynamical relations

For the bulk and the interfacial layer in the case of a classical fluid mixture with N species, the internal energy E of a given volume of fluid is an order one homogeneous function of its entropy S, its volume V and of the masses of species m_j which are extensive quantities. This gives, for the unit mass, the Euler, Gibbs and Gibbs-Duhem well-known relations:

$$e = Ts - pv + \sum_{j=1}^{N} g^j Y^j$$

$$de = T\,ds + p\,d(1/\rho) + \sum_{j=1}^{N} g^j\,dY^j$$

$$0 = s\,dT - v\,dp + \sum_{j=1}^{N} Y^j\,dg^j \quad (9)$$

In (9), Y^j is mass fraction and g^j the chemical potential per unit of mass of the species j. For the 2D interface, usual thermodynamical relations read

$$
\begin{aligned}
& e_S = T_S s_S + \sigma/\rho_a + \sum_{j=1}^{N} g_S^j Y_S^j \\
& \mathrm{d}e_S = T_S\,\mathrm{d}s_S + \sigma\,\mathrm{d}(1/\rho) + \sum_{j=1}^{N} g_S^j\,\mathrm{d}Y_S^j \\
& 0 = s_S\,\mathrm{d}T_S + (1/\rho_a)\,\mathrm{d}\sigma + \sum_{j=1}^{N} Y_S^j\,\mathrm{d}g_S^j
\end{aligned}
\tag{10}
$$

In the case of 3D interfacial fluid layers with internal capillarity, and taking a one component fluid for simplicity, internal energy E of the stratified layer, for a volume V with a small thickness around a coordinate surface, is an order one homogeneous function of quantities S, V, of the mass m, and of a complementary extensive variable S which is homogeneous to an area, but is not equal to the area of the part of S_3 contained in the considered volume. One has $S = \int_V \frac{1}{v}\left|\frac{dv}{d\xi}\right| dV$, and the internal energy per unit mass becomes $e = e(s, v, \left|\frac{dv}{d\xi}\right|)$.

One can write

$$
\begin{aligned}
& e = Ts - pv + \Lambda\left|\frac{\mathrm{d}v}{\mathrm{d}\xi}\right| + g \\
& \mathrm{d}e = T\,\mathrm{d}s - p\,\mathrm{d}v + \Lambda\,\mathrm{d}\left|\frac{\mathrm{d}v}{\mathrm{d}\xi}\right| \\
& 0 = s\,\mathrm{d}T - v\,\mathrm{d}p + \left|\frac{\mathrm{d}v}{\mathrm{d}\xi}\right|\mathrm{d}\Lambda + \mathrm{d}g
\end{aligned}
\tag{11}
$$

More usually, one write [1, 6]

$$
\begin{aligned}
& e = e\left(s, \rho, |\vec{\nabla}\rho|^2\right) \\
& \mathrm{d}e = T\,\mathrm{d}s - p\,\mathrm{d}\left(\frac{1}{\rho}\right) + \lambda\vec{\nabla}\rho\cdot\mathrm{d}\left(\vec{\nabla}\rho\right)
\end{aligned}
\tag{12}
$$

where λ is defined as the capillarity coefficient [1].

5. General balance law

The local form of the balance equation for any property, whose volumetric value is denoted by $\rho\psi$ is

$$
\frac{\mathrm{d}_{\vec{W}}(\rho\psi)}{\mathrm{d}t} + \rho\psi\vec{\nabla}\cdot\vec{W} + \vec{\nabla}\cdot\left[\vec{J} + \rho\psi\left(\vec{V} - \vec{W}\right)\right] = \rho\phi \tag{13}
$$

where velocity $\vec{W}$ is defined by (7). An integration of the two sides of (13) across the interfacial layer leads to the balance law for the 2D interface [1].

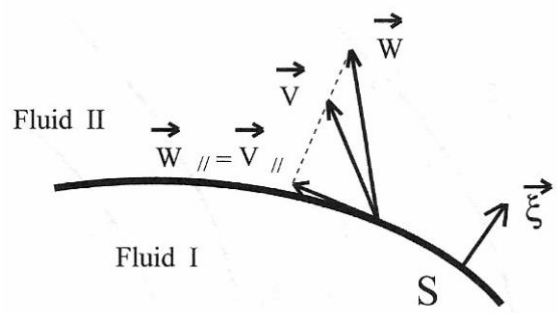

Fig. 4. The different velocities on the (2D) interface S.

$$\frac{\mathrm{d}_{\vec{W}_S}(\rho_a \psi_S)}{\mathrm{d}t} + \rho_a \psi_S \vec{\nabla}_S \cdot \vec{W}_S + [\![(\vec{J} + \rho\psi(\vec{V} - \vec{W}_S)) \cdot \vec{\xi}]\!] + \vec{\nabla}_S \cdot \vec{J}_{a\parallel} = \rho_a \phi_S \tag{14}$$

where $\vec{\nabla}_S$ is the operator $\vec{\nabla}_{//}$ taken at $x_3 = 0$, and $\vec{\xi}$ is the unit normal $\vec{e}_3$ to the surface $S = S_3(x_3 = 0)$, with definitions (1) to (3) for the interfacial variables, $\vec{W}_S$ being defined by (3) with $\vec{W}$ in place of $\vec{V}$, and with the flux $\vec{J}_a = \int_{\xi_I}^{\xi_{II}} [\![(\vec{J} + \rho\psi(\vec{V} - \vec{W}_S)) \cdot \vec{\xi}]\!]_S \, d\xi$. The average velocities are shown on Fig. 4.

General surface balance law (14) can be applied to masses of species and to total mass. An alternative form of (14) may then be deduced by using the mass balance and by introducing the mass flow rate $\dot{m} = \rho(\vec{V} - \vec{W}_S) \cdot \vec{\xi}$

$$\rho_a \frac{\mathrm{d}_S \psi_S}{\mathrm{d}t} + [\![J_\perp + \dot{m}(\psi - \psi_S)]\!] + \vec{\nabla}_S \cdot \vec{J}_{a\parallel} = \rho_a \phi_S \tag{15}$$

and may be applied to momentum, total energy, internal energy, and entropy [1].

6. Interfacial constitutive relations

6.1. 2D closure relations

Using mass, species and internal energy balance equations deduced from (15) and using the relations of system (10), an interfacial Clausius-Duhem inequality is then written in which it appears a sum of products of terms of zero, one and two tensorial order terms [1] In fact, the two-dimensional surface entropy production is such that the surface dissipation $T_s\Delta_a$ has the symbolic form:

$$T_S \Delta_a = \sum_{\alpha=1}^{m} \mathcal{A}_S^\alpha \mathcal{J}_S^\alpha \geqslant 0 \tag{16}$$

Each product corresponds to an irreversible phenomenon, and $\mathcal{A}_S^\alpha$ and $\mathcal{J}_S^\alpha$ represent the generalized forces and fluxes.

This result suggests applying the general principles of irreversible Thermodynamics [35] and writing linear closure relations between generalized forces and fluxes of same tensorial order

$$\mathcal{J}_S^\alpha = \sum_{\beta=1}^{m} L_S^{\alpha\beta} \mathcal{A}_S^\alpha \tag{17}$$

This method is usually applied to classical problems of surfaces without mass [1] but with surface tension. At equilibrium, the momentum equation is the Laplace law

$$p_{II} - p_I = -\sigma \vec{\nabla} \cdot \vec{\xi}$$

Out of equilibrium, the momentum equation becomes

$$[\![\dot{m}\vec{V}]\!] - [\![\vec{\vec{\Sigma}}]\!] \cdot \vec{\xi} - \vec{\nabla}_S \cdot \vec{\vec{\Sigma}}_{a\parallel} = 0 \tag{18}$$

With or the bulk $\vec{\vec{\Sigma}}$ stress tensor and $\vec{\vec{\Sigma}}_{a//}$ for the interfacial stress tensor. Tensor $\vec{\vec{\Sigma}}_{a//}$ may contain surface viscosities terms [33].

Marangoni effect, Bénard-Marangoni instability [36], surface heat transfer, evaporation-condensation, near-equilibrium surface chemical reactions, may be studied with this method.

Coefficients $L_S^{\alpha\beta}$ of relation (17) are generally deduced from molecular theory and experimental measurements. The previous method is no more valid for material surfaces notably far from equilibrium, but constitutive relations can be found in the literature in specific cases, as for vapor recoil [37, 39], adsorption-desorption, and surface chemical reaction with non-linear kinetics.

6.2. 3D closure relations

Some situations cannot be directly studied using surface equations, and a preliminary study of the interfacial layer behavior is necessary. Fluid layers with capillarity must be considered as 3D interfacial layers, and the second gradient method utilized [1, 7, 11]. For such a fluid inside the interfacial layer far from any wall, and assuming that it is without dissipation

$$\vec{\vec{\Sigma}} = -p_* \vec{\vec{I}} - \lambda \vec{\nabla}\rho \vec{\nabla}\rho \tag{19}$$

In simple cases it is possible to connect surface tension u to capillarity coefficient λ [11], writing

$$\sigma = \int_{\xi_I}^{\xi_{II}} -p_*(\xi)\,\mathrm{d}\xi \cong \int_{\xi_I}^{\xi_{II}} \lambda \left|\vec{\nabla}\rho\right|^2 \mathrm{d}\xi \tag{20}$$

Fluid with capillarity can also be applied near a wall. This is the case for some wetting problems [40, 41].

For some generalized interfaces, as premixed flames with high activation energy [13-16], shock waves and relaxation zones behind shock waves [1, 42, 43], interfacial layer instability between two miscible fluids [44], interfacial layer instability in a pure heated supercritical

fluid [45], some shear layers [46], it is possible to deduce surface properties. But this results from a detailed study of the interfacial layer, which obeys generally to linearized (heat and species diffusion, viscosity) or non-linear (chemical kinetics) classical constitutive relations.

For premixed flames with high activation energy, the obtained combustion velocity is a linear function [15] of sur face stretch $\vec{\nabla}_S \cdot \vec{W}_S$ as defined by (8), but in strongly turbulent flows the stretch dependence becomes non-linear.

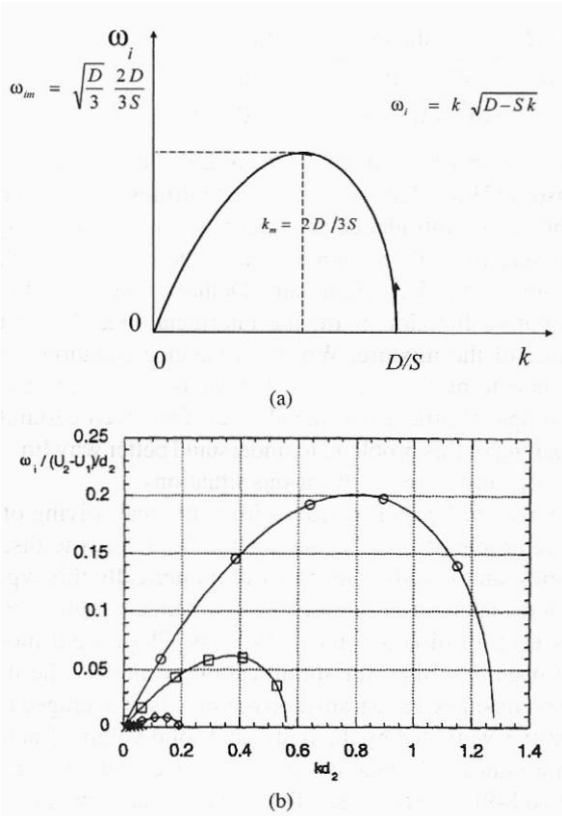

Fig. 5. Amplification factor for two semi-infinite superposed fluids, without gravity: (a) In inviscid fluids with surface tension σ, $S = \dfrac{\sigma}{\rho_1 + \rho_2}$, $D = \dfrac{\rho_1 \rho_2 (U_1 - U_2)^2}{(\rho_1 + \rho_2)^2}$ [1]. (b) With no surface tension but a linear velocity profile through the gaseous boundary layer $r_2=\infty$: and: o S_2 =1; □ $S_2 = 10^{-1}$; ◊ $S_2 = 10^{-2}$; × = $S_2 = 10^{-3}$, $r_2=U_2/U_1$, $S_2=\rho_2/\rho_1$ (Raynal 1997 [46]).

In the case of interfacial layer with species diffusion between two miscible fluids, but also in the case of shear layers with momentum transfer, the stability analysis shows an influence of the interfacial layer on the growing curve (ω_i, in function of k) similar to the one of surface tension on Rayleigh and Kelvin-Helmholtz instability growing curve. In Fig. 5a, and similarly in Fig. 5b, there is a domain of instability for $\omega_i > O$ with a maximum of ω_i and a cut-off wave number. This suggests inserting of an effective surface tension in the second case.

7. Conclusion

Other relevant questions can be considered.

A *first question* deals with the description of deformations inside the interfacial zone. Interfacial zone appeared as a stratified region. This is a relatively comfortable situation, where the equation for area deformation can be directly deduced from interfacial kinematics

written in curvilinear coordinates. Indeed, the material derivative of $\Sigma = \delta S_3 / \delta V$, the density of area per unit volume of the structured layer, reads (see (8))

$$\begin{aligned} \frac{1}{\Sigma}\frac{\mathrm{d}_{\vec{W}}\Sigma}{\mathrm{d}t} &= \frac{1}{\delta S_3}\frac{\mathrm{d}_{\vec{W}}\delta S_3}{\mathrm{d}t} - \frac{1}{\delta V}\frac{\mathrm{d}_{\vec{W}}\delta V}{\mathrm{d}t} \\ &= \vec{\nabla}_{\parallel}\cdot\vec{W} - \vec{\nabla}\cdot\vec{W} = -\vec{\nabla}_{\perp}\cdot\vec{W} \end{aligned} \tag{21}$$

This relation (in another form) is utilized by Candel and Poinsot [47] for flames. In turbulent burning flows, average quantities are introduced, and source terms appear on right hand side of (20). Another case is the one of two-phase mixtures. Lhuillier, Morel and Delhaye [48] introduce a distribution function δ_{I} for the interfacial area Σ per unit volume of the mixture. Writing a balance equation for δ_{I} a source term γ appears, which vanishes in the case of our simple stratified interfacial layer. One need certainly a deepening of this problem, to understand better why Eq. (20) remains valid in so much various situations.

The *second question* deals with numerical solving of interface problems. The 2D description often leads to discontinuities, and it is difficult in solve numerically this type of problem. Then, some authors try to obtain continuous equations even in discontinuous situations. Phase field models have been described for solidification of alloys. The interface is considered as a transition region where averaged local quantifies weighted by the liquid and solid volume fractions are introduced. At macroscopic scale, we find an enthalpy method [49] whereas at smaller scale, balance equations are deduced by minimization of free energy in functional analysis [50] Jamet et al. [51] use a second gradient method with an artificially thickened interface, and Jamet and Petitjeans [52] apply phase field models to interfaces of diffusion. Research attempt would certainly be useful on the topic “Phase field methods for fluid interfaces”.

To conclude, we can say that in this paper, interfacial modeling of fluid was presented in such a manner that 2D description result generally from 3D analysis. Many examples where briefly presented. The reader will find a more detailed presentation in the book [1]. Other examples of application could certainly be considered.

References

[1] R. Gatignol, R. Prud’homme, Mechanical and Thermodynamical Modeling of Fluid Interfaces, in: Ser. Adv. Math. Appl. Sci., vol. **58**, World Scientific, Singapore, 2001.

[2] J.D. Van der Waals, P.H. Kohnstamm, Lehrbuch der Thermostatik, vols. I and II, Verlag von Johann Ambrosius Barth, Leipzig, 1928.

[3] J.W. Cahn, I.E. Hilliard. Free energy of a nonuniform system. I. Interfacial free energy, J. Chem. Phys, **28** (1958) 258-267.

[4] S. Ono, S. Kondo, Molecular theory of surface tension in liquids, in: S. F (Ed.), Handbuch der Physik, vol. **X**, Springer, Berlin, 1960, pp. 134-277.

[5] J.S. Rowlinson, B. Widom, Molecular Theory of Capillarity, Clarendon Press, Oxford, 1982.

[6] R. Evans, The nature of the liquid-vapour interface and other topics in the statistical mechanics of non-uniform, classical fluids, Adv. Phys. **28** (1979) 143-200.

[7] P. Casal, La capillarité interne. Cahier Groupe Français Rhéologie CNRS VI 3(1961) 31-37.

[8] P. Casal, La théorie du second gradient et la capillarité, C. R. Acad. Sci Paris Sér. A **274** (1972) 1571-1574.

[9] P. Germain, La méthode des puissances virtuelles en mécanique des milieux continus, J. Mécanique **12** (1973)235-274.

[10] P. Casal, H. Gouin, A representation of liquid-vapor interfaces by using fluids of second grade, Ann. Phys. Colloq. 2 Suppl. 3(13 1988)

[11] R Seppecher, Etude d'une modélisation des zones capillaires fluides:

Interfaces et lignes de contact, Thèse de Doctorat de l'Université Pierre et Marie Curie, Paris, 1987.

[12] R. Gatignol, P. Seppecher, Modelisation of fluid-fluid interfaces with material properties, J. Mécan. Theory Appl. Numéro Spécial (1986) 225-247.

[13] A.M. Klimov, Zhur. Pricl. Mech. Tekhn. Fiz. **49** (3) (1963).

[14] G.I. Sivashinsky, Structure of Bunsen flames, J. Chem. Phys. **62** (1975) 638-643.

[15] P. Clavin, G. Joulin, Premixed flames in large and high intensity turbulent flow, J. Phys. Lett. **44**(1) (1983) Ll-L12.

[16] R. Prud'homme, Fluides Hétérogènes et Réactifs: Écoulements et Transferts, in: Lecture Notes in Phys., vol. **304**, Springer, Berlin, 1988,

[17] J.-M. Delhaye, Jump conditions and entropy sources in two-phase systems, Internat. J. Multiphase Flow **1**(1974) 395-409.

[18] LE. Scriven, Dynamics of a fluid interface. Equation of motion for Newtonian surface, Chem. Engng. Sci. **12** (1960) 98-108.

[19] J.C. Slattery, General balance equation for a phase interface, I&EC Fundamentals **6**(1) (1967) 108.

[20] Y. Rocard. Thermodynamique, Masson et Cie, Paris, 1967.

[21] L.D. Landau. E.M. Lifschitz, Statistical Physics, Pergamon Press, New York, 1959.

[22] D. Bedeaux, A.M. Albano, P. Mazur, Boundary conditions and non equilibrium thermodynamics. Physica A **82** (1976) 438—462.

[23] L.G. Napolitano, Thermodynamics, and dynamics of surface phase, in: XXIX Congress of the International Astronautical Federation Dubrovnik, Yugoslavia, 1978 (preprint IAF-78-207).

[24] A. Prosperetti, Boundary conditions at a liquid-vapor interface, Meccanica **14** (1979) 34-47.

[25] R. Ghez, A generalized Gibbsian surface, Surface Sci. **4** (1966) 125- 140.

[26] R. Ghez, Irreversible thermodynamics of a stationary interface, Surface Sci. **20** (1970) 326-334.

[27] R. Prud'homme, Equations du bilan de systèmes comprenant des interfaces, J. Phys. Colloq. C5 Tome B Supp 32 (10) (1971) 62-63.

[28] M. Ishii, Thermo-Fluid Dynamic Theory of Two-Phase Flow, Eyrolles, Paris, 1975.

[29] V.V. Gogosov, VA. Naletova, Chung Za Bin, G.A. Shapeoshnikova, Conservation laws for the mass, the momentum and energy on a phase interface for true and excess surface parameters, Fluid Dynamics **6** (1983) 923-930.

[30] A, Sanfeld. A. Steinchen, Surface excess momentum balances by integration across the surface of the volume balances, in: A. Steinchen (Ed.), Dynamics of Multiphase Flow Across Interfaces, in: Lecture Notes in Phys., vol. **467**, Springer, Berlin, 1996, pp. 28-36.

[31] Meinhold-Heerlein, Surface conditions for the liquid-vapor system. taking in account entropy production caused by mass and energy transport across the interface, Phys. Rev A **8** (1979) 2574—2585.

[32] J.W. Gibbs, The Scientific Papers of J.W. Gibbs, Dover, New York, 1961, pp. 219-274.

[33] J.C. Slattery, Interfacial Transport Phenomena, Springer, Berlin, 1990.

[34] R. Defay, I. Prigogine, A. Bellemans, D.H, Everett, Surface Tension and Adsorption, Longmans Green, London, 1966.

[35] S.R. De Groot, P. Mazur, Non-Equilibrium Thermodynamics, North Holland, Amsterdam, 1984.

[36] LE. Scriven, CV. Sternling, On cellular convection driven by surface- tension gradients: Effects of mean surface tension and surface viscosity, Chem. Engng. Mech. **19** (1964)321-340.

[37] H.J. Palmer, The hydrodynamic stability of rapidly evaporating liquids at reduced pressure, J. Fluid Mech. **75** (1976) 487-511.

[38] K. Sefiane, D. Bénielli, A. Steinchen, A new mechanism for pool boiling crisis, recoil instability and contact angle influence, Colloids and Surfaces A: Physicochem. Eng. Aspects **142** (1998) 361-373.

[39] V.S. Nicolaiev, D.A. Beysens, Bolling crisis and non-equilibrium drying transition, Europhys. Lett. **47** (1999) 345-351.

[40] P. Seppecher, Equilibrium of Cahn md Hilliard fluid on a wall: Influence of the wetting properties of the fluid upon the stability of a thin liquid film, European J. Mech. B/Fluids **12** (1993) 69-84.

[41] Y. Pomeau, Moving contact line, J. Phys. IV France 11(6) (2001) 199- 212.

[42] N. Jamet, Modélisation des discontinuities dans les écoulements diphasiques compressibles, Thèse de Doctorat de l'Université Pierre et Marie Curie, Paris, 1998.

[43] N. Jamet, R. Prud'homme, L. Gottesdiener, Modélisation interfaciale de chocs dans les suspensions, in: XVème Congrès Français de Mécanique, 3-7 Septembre 2001.

[44] P. Kurowski. C. Mibab, S. Tchourkine, Gravitational instability of a fictitious front during mixing of miscible fluids, Europhys. Lett. 29

(1995) 309—3 14.

[45] B. Zappoli, S. Amiroudine, S. Gauthier, Instabilité gravitationnelle dans un fluide supercritique pur, C. R. Acad. Sci. Paris Sér. IIb **325** (1997) 1-6.

[46] L. Raynal, Instabilité et entrainement à l'interface d'une couche de mélange liquide-gaz, Thèse de Doctorat de l'Université Joseph Fourier, Grenoble, 1997.

[47] S.M. Candel. T. Poinsot, Flame stretch and the balance equation for the flame area, Combust. Sci. Technol. **70** (1990) 1-5.

[48] D. Lhuillier, C. Moel. J.-M. Delhaye, Bilan d'aire interfaciale dans un mélange diphasique: approche locale vs approche particulaire, C. R. Acad. Sci. Paris Sér. IIb **328** (2000) 143-149.

[49] M. El Ganaoui, Modélisation numérique de la convection thermique instationnaire en présence d'un front de solidification déformable, Thèse de l'Université d'Aix-Marseille. 1997.

[50] M. Plapp, A. Karma, Eutectic colony formation: A phase field model, Cond-mat/0112194.

[51] D. Jamet, O. Lebaigue, N. Coutris, J.-M. Delhaye, A numerical description of a liquid-vapor interface based on the second gradient theory, Fluid Mech. Res. Mars (1997).

[52] D. Jamet, Ph. Petitjeans, A physical justification of a phase-field model for interfaces separating miscible fluids, in: International Workshop on Miscible Interfaces, ESPCI, Paris, 2-5 July 2001.