HAL
open science

Preliminary proliferation study of the molten salt fast reactor

Michel Allibert, Elsa Merle, Sylvie Delpech, Delphine Gerardin, Daniel Heuer, Axel Laureau, Simon Moreau

To cite this version:

Michel Allibert, Elsa Merle, Sylvie Delpech, Delphine Gerardin, Daniel Heuer, et al.. Preliminary proliferation study of the molten salt fast reactor. EPJ N - Nuclear Sciences & Technologies, 2020, 6, pp.5. 10.1051/epjn/2019062 . hal-03037616

HAL Id: hal-03037616
https://hal.science/hal-03037616

Submitted on 3 Dec 2020

HAL is a multi-disciplinary open access archive for the deposit and dissemination of scientific research documents, whether they are published or not. The documents may come from teaching and research institutions in France or abroad, or from public or private research centers.

L'archive ouverte pluridisciplinaire **HAL**, est destinée au dépôt et à la diffusion de documents scientifiques de niveau recherche, publiés ou non, émanant des établissements d'enseignement et de recherche français ou étrangers, des laboratoires publics ou privés.

EPJ Nuclear Sci. Technol. **6**, 5 (2020)
© M. Allibert et al., published by EDP Sciences, 2020
https://doi.org/10.1051/epjn/2019062

EPJ Nuclear Sciences & Technologies

Available online at:
https://www.epj-n.org

Regular Article

Open Access

Preliminary proliferation study of the molten salt fast reactor

Michel Allibert[1], Elsa Merle[1,*], Sylvie Delpech[2], Delphine Gerardin[1], Daniel Heuer[1], Axel Laureau[1], and Simon Moreau[1]

[1] CNRS/IN2P3/LPSC – UGA – Grenoble INP, Grenoble, France
[2] CNRS/IN2P3/IPN Orsay, Orsay, France

Received: 15 March 2019 / Received in final form: 17 September 2019 / Accepted: 12 December 2019

Abstract. The molten salt reactor designs, where fissile and fertile materials are dissolved in molten salts, under consideration in the framework of the Generation IV International Forum, present some unusual characteristics in terms of design, operation, safety and also proliferation resistance issues. This paper has the main objective of presenting some proliferation challenges for the reference version of the Molten Salt Fast Reactor (MSFR), a large power reactor based on the thorium fuel cycle. Preliminary studies of proliferation resistance are presented here, dedicated to the threat of nuclear material diversion in the MSFR, considering both the reactor system itself and the processing units located onsite.

1 Introduction

The Generation IV International Forum (GIF) [1] has proposed a methodology that should allow the analysis of proliferation resistance and physical protection (PR&PP) issues in advanced nuclear reactors under development. An initial application of this methodology to the MSFR [2] is presented here, including an analysis of both the reactor and the fuel processing units, these being located in situ in this concept. For this initial study, we have focused our attention on a portion of the methodology retained by GIF and restricted our study to what is specific of this reactor concept.

Because the MSFR is in the design phase, we have adopted a gradual approach of the issues, focusing on the seemingly most critical situations. The idea is to carry out many partial analyses on topics such as Safety and Proliferation Resistance (PR), to define constraints that should be fulfilled in its final design. This is a way of getting Safety-by-design and Proliferation-Resistance-by-design instead of adding relevant features afterward, which is usually more expensive. By doing so the analysis cannot be complete but allows an early detection of potential problems: it is a gradual approach. The first PR case studied for the MSFR and presented here focuses on the threat of a concealed diversion of material by a host state having unlimited means, followed by processing of this material in an undeclared facility. It is limited, as a first step, at documenting the system response as designers.

By applying the GIF methodology to this case, we successively identify the elements of the nuclear power plant (NPP) site, we identify the targets for material diversion and the pathways to achieve diversion, and we suggest countermeasures to prevent this. This corresponds to the designer's work and do not contain risks evaluation.

The data provided hereafter correspond to a so-called MSFR mentioned as "Reference Reactor" [2] chosen for the design and safety studies carried out during the Euratom SAMOFAR (Safety Assessment of the Molten Salt Fast Reactor) project of the Horizon 2020 program [3] that allow a correct technical level of knowledge of the system for the proliferation resistance studies presented in this article.

After a short presentation of the MSFR concept, the materials that could be diverted are identified and located in the NPP. A focus has been done on the Pa diversion case because it is specific to the concept. Then, consequences are presented for the design of the onsite chemical processing unit related to proliferation resistance issues.

2 Presentation of the MSFR concept

Starting from the Oak-Ridge National Laboratory Molten Salt Breeder Reactor project [4], the innovative MSFR concept has been proposed, resulting from extensive parametric studies in which various core arrangements, reprocessing performances and salt compositions were investigated with a view to the deployment of a thorium based reactor fleet on a worldwide scale [2]. The primary

* e-mail: elsa.merle@lpsc.in2p3.fr

This is an Open Access article distributed under the terms of the Creative Commons Attribution License (https://creativecommons.org/licenses/by/4.0), which permits unrestricted use, distribution, and reproduction in any medium, provided the original work is properly cited.

feature of the MSFR concept versus that of other older MSR designs is the absence of graphite moderator in the core (graphite-free core), resulting in a breeder reactor with a fast neutron spectrum and operated in the thorium fuel cycle as described below. The treatment of ^{233}Pa, whose extraction is mandatory in the MSBR to achieve breeding and known as problematic regarding proliferation resistance, is thus completely different in the MSFR compared to the historical thermal neutron spectrum reactors. The ^{233}Pa is not extracted in the processing scheme of the MSFR as detailed below, because the fast spectrum allows an excellent breeding ratio without requiring such an extraction. The MSFR has been recognized as a long term alternative to solid fuelled fast neutron systems with a unique potential (excellent safety coefficients, small fissile inventory, no need for surplus reactivity, simplified fuel cycle...) and has thus been officially selected for further studies by the GIF since 2008 [5,6].

2.1 Concept overview

The reference MSFR is a 3000 MWth reactor with a fast neutron spectrum and based on the thorium fuel cycle as previously mentioned. In the MSFR, the liquid fuel processing is an integral part of the reactor where a small fraction of the molten salt (40 L/day) is set aside to be processed for fission product removal and then returned to the reactor. This is fundamentally different, and less proliferation resistant, from a solid-fuelled reactor where separate facilities produce the solid fuel and process the spent nuclear fuel (SNF). The MSFR can be operated with widely varying fuel compositions thanks to its online fuel control and flexible fuel processing: its initial fissile load may comprise ^{233}U, ^{235}U enriched (between 5% and 30%) uranium, or the transuranic (TRU) elements currently produced by pressurized water reactors (PWRs) [7]. In the present work we have considered two versions of the MSFR, one version started with ^{233}U as fissile material, and a second version started with a mix of TRU elements and enriched uranium as fissile material.

2.2 Systems description of the MSFR fuel circuit

The MSFR plant includes three main circuits involved in power generation: the fuel circuit, the intermediate circuit and the power conversion circuit. The fuel circuit is defined as the circuit containing the fuel salt during power generation and includes the core cavity and the cooling sectors allowing the heat extraction. The nuclear fission reactions take place in the cavity where a critical mass of the flowing fuel salt is reached. The core cavity can be decomposed in three volumes: the active core, the upper extraction volume and the lower injection volume. The core is surrounded by a fertile blanket filled with a fertile salt containing thorium.

The fuel circuit is connected to an emergency draining system which can be used in case of incident/accident leading to an excessive temperature being reached in the core, or in case of leakage from the fuel salt circuit. In such situations the fuel salt geometry can be passively reconfigured by gravity driven draining of the fuel salt into tanks located under the reactor where a passive cooling and adequate reactivity can be implemented.

The three circuits of power production are thus associated with other systems composing the whole power plant: an emergency draining system, a routine draining system and storage areas, and bubbling and chemical processing units located onsite.

2.3 Control and processing of the molten salts

As mentioned above, the fuel salt undergoes two types of processing treatments: an online neutral gas bubbling in the core and a remote mini-batch processing onsite [8].

The in-core gas (He and recycled Kr and Xe) bubbling system is used to clean the salt from gaseous fission products and metallic particles. In the present version of the system, the gas is injected at the bottom of the core and recovered at the top to be cleaned up from a part of the fission products in the gas processing unit. This can be done in the fuel circuit out of the core if necessary.

The chemical fuel processing is done through online fuel punctures (10 to 40 L), the loading being done by fluid transfer during reactor operation. The fertile salt is cleaned also using the same process at a rate that can be different according to the objectives. Thus, fuel salt and fertile salt samplings are regularly performed to control and adjust their chemical composition and inventory.

3 Proliferation analysis: nuclear material diversion

3.1 Element identification

The option chosen for the present PR analysis is to consider a country with a limited number of nuclear sites with large power units. In this case the NPP site could contain several reactors sharing common facilities such as the fuel cleaning unit where small amounts of fuel salt are processed to remove part of the fission products and where bred ^{233}U is extracted from fertile salt to feed the on-site reactors.

The setup considered for an MSFR nuclear plant site delivering large power consists in several buildings that are interconnected by devices able to ensure the transfer of these radioactive materials.

Due to the penetrant 2.6 MeV gamma radiations (see next section) from the Th/U fuel cycle, these transfers will be achieved via remote control within enclosures fitted with several confinement barriers and a gamma ray protection shield. Safety also requires a physical separation (door) between the system's buildings to ensure confinement. All the materials and equipment can thus be conveyed via chambers equipped with control devices (radiation measurement, visual and thermal monitoring, scales, etc.) as illustrated in Figure 1.

This scheme is not final: the question of which elements are shared between reactors and which are dedicated to a single reactor is not decided from the safety point of view. It is likely that a more complex structure will be necessary, in

particular for the fuel cleaning unit, depending on the proliferation resistance analysis results. The schematic will be modified as the design progresses.

3.2 Target identification

Here, the goal is to determine where in the installation a fissile material diversion could occur. The amounts of materials and the isotopic vector of the actinides present in the various zones of the MSFR system can be estimated through the simulations of the fuel salt evolution according to the parameters characterizing the reactor, the fuel cleaning methodology and the operation mode. The numbers listed below correspond to the "reference reactor" presented in the preceding section, if it is started with ^{233}U or a mix of 13% enriched U and the TRUs from a PWR [7].

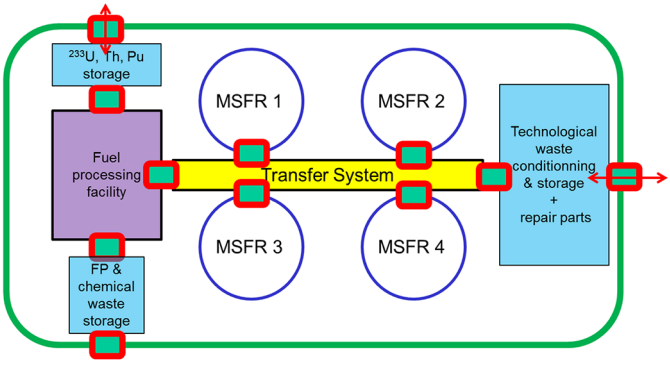

Fig. 1. Schematic representation of a nuclear site with 4 reactors sharing common facilities. Green rectangles with red contours represent monitoring chambers for any transfer in or out the elements. Internal transfers on site are made by remote handling (yellow).

The inventories of the isotopes of U, Pu, and Np are shown in Table 1, for an 18 m^3 fuel volume and 7.7 m^3 fertile blanket volume. Special attention has been given to ^{232}U whose presence is considered to favor proliferation resistance due to the 2.6 MeV gamma radiation generated in its decay to ^{208}Pb. ^{232}U, whose half-life is 68.9 yr is mainly produced via the $(n,2n)$ reaction of fast neutrons on ^{232}Th nuclei, followed by an (n,γ) reaction on ^{231}Pa:

$$\begin{cases} {}^{232}_{90}\mathrm{Th} \xrightarrow[(n,2n)]{} {}^{231}_{90}\mathrm{Th} \xrightarrow[\beta^-(25.5\mathrm{h})]{} {}^{231}_{91}\mathrm{Pa} \\ {}^{231}_{91}\mathrm{Pa} \xrightarrow[(n,\gamma)]{} {}^{232}_{91}\mathrm{Pa} \xrightarrow[\beta^-(1.31\mathrm{d})]{} {}^{232}_{92}\mathrm{U}. \end{cases}$$

The 2.6 MeV gamma radiation systematically co-occurs with ^{233}U in the reactors based on the Th/U cycle. It makes the remote handling of Th mandatory (see Fig. 2) and it facilitates the detection of any attempted diversion of this element.

Table 1 shows that plutonium's isotopic vector is degraded compared to that in the solid fuel of today's reactors, so it is not an attractive target. This is also illustrated in Figure 3: the ^{238}Pu content stays consistently

Table 1. Isotope inventories (in kilograms, unless otherwise stated).

Isotope	Half life (Short)	^{233}U – started 1y	^{enr}U+TRU – started 1y	Fuel salt Equ. 200y	Fertile salt
^{232}U	69.8 y	3.5	142 g	13	34 g
^{233}U		**4976**	**514**	**4658**	**58.5**
^{234}U		143.9	12.8	1769	0
^{235}U		4.9	2506	510	0
^{236}U		0	149.5	562	0
^{237}U		0			0
^{238}U		0	16300	1	0
^{232}U/U		***700 ppm***	***50 ppm***	***1700 ppm***	***600 ppm***
^{233}U/U		**97%**	**2.7%**	**62%**	**99%**
^{238}Pu		0	239	161	0
^{239}Pu		0	3265	66	0
^{240}Pu		0	1617	57	0
^{241}Pu		0	641	48	0
^{242}Pu		0	491	10	0
^{239}Pu/Pu			***52%***	***19%***	
^{231}Pa		300 g	900 g	10	630 g
^{232}Pa	1.3 d	3.9 g	0	15 g	15.4 g
^{233}Pa	**27 d**	**124**	**45.6**	**108**	**13**
^{234}Pa	6.8 h	20 g	6.5 g	15.7 g	1 g
^{236}Np		0	7 g	9.4 g	0
^{237}Np		**0**	**377.8**	**145**	**0**
^{238}Np	2.1 d	0	507 g	200 g	0
^{239}Np	2.4 d	0	5.4	0	0

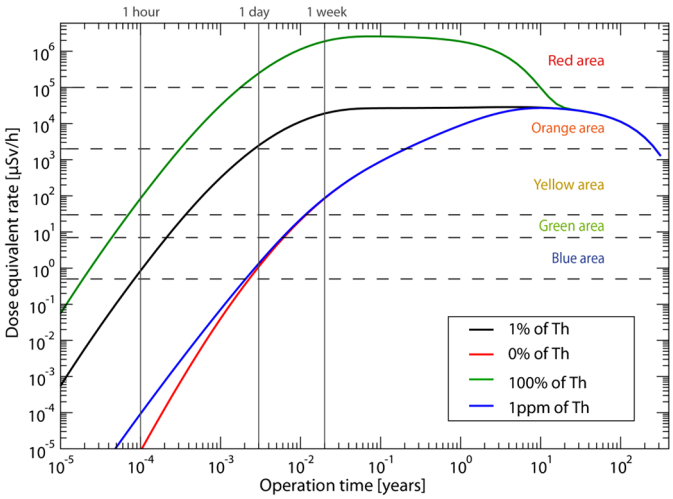

Fig. 2. Evolution of the dose equivalent rate of a fuel salt batch in the storage area of the chemical cleaning unit for four scenarios of thorium extraction, with a mention to the 5 areas defined by the French classification [9]. The case "0% of thorium" (red curve) is the weaker concerning proliferation resistance since the dose equivalent rate is the lower during the first hours.

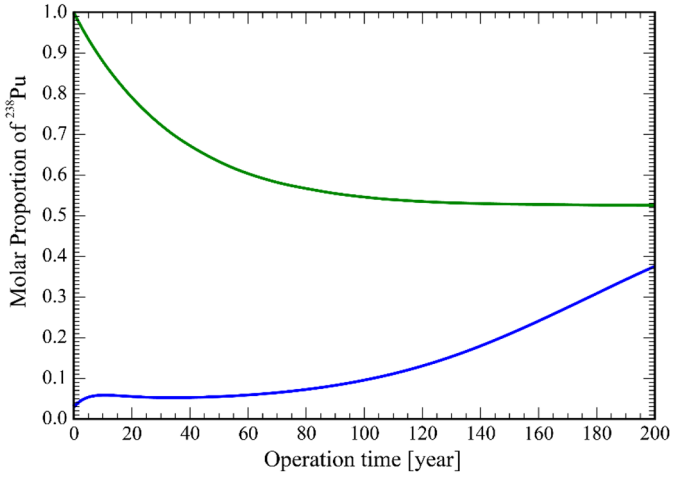

Fig. 3. Time evolution of the ^{238}Pu content in the total Pu for a reactor started with ^{233}U (green curve) and with $^{\text{enriched@13\%}}$U+TRU (blue curve).

larger than 5%. Since the proliferation resistance of this fissile material has already been studied in other reactor concepts and is not specific to MSR, it is not treated here as mentioned previously. Finally, pure ^{237}Np can be obtained but its use as alternative nuclear explosive has been questioned [10]. Two targets remain to be considered: U from breeding in the blanket and stored for future use to start other reactors, and the Pa.

In conclusion, the diversion of nuclear material contained in the reactor core seems impossible, so that we will consider only the possibilities for nuclear material diversions within the chemical processing unit.

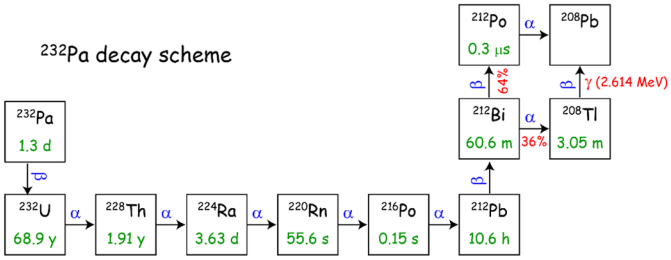

Fig. 4. ^{232}Pa decay chain leading to ^{208}Pb and the emission of the associated 2.6 MeV gamma ray. If the most attractive targets (Pa and U) are separated from the elements to their right, the gamma ray emission will be suspended for a relatively long time, allowing their undetected diversion.

3.3 Pathway identification

The fuel contains ^{233}Pa with 140 ppm ^{232}Pa, giving a dose rate for the uranium formed (containing, at the beginning of decay, up to 3000 ppm ^{232}U) on the order of 200 to 6000 times larger than the dose rate associated with reactor grade Pu. The 2.6 MeV gamma ray emitted by the ^{208}Pb formed by the decay of ^{232}Pa is the main contributor to this dose rate and its attenuation requires a large shielding mass.

Concealed diversion of these targets is possible only after they have been separated from the other actinides and under the provision that such separation allows a significant reduction of the 2.6 MeV gamma radiation emissions. This separation could take place in the salt cleaning unit, before lanthanide separation. This salt cleaning unit seems the most sensitive from the proliferation resistance point of view. To grasp the stakes, the decay chain leading from ^{232}Pa to ^{208}Pb has to be examined, as well as the separation means that it would be used for normal system operation but could be misused for the purposes of diversion. The decay chain leading to ^{208}Pb is shown in Figure 4.

The 2.6 MeV gamma radiation can be suppressed in two ways. One is to isolate the Pa from all the other actinides, then wait for the decay of the ^{232}Pa so as to divert ^{233}Pa after having extracted from it the U and its descendants, in one or several passages within the fuel salt cleaning unit (see Fig. 5). The other is to efficiently separate the Th and its descendants from the U to cut the decay chain at the ^{228}Th level. The second option suspends the 2.6 MeV gamma radiation while the first attenuates it indefinitely. The procedures used to clean the fuel or extract the U from the blanket have to be evaluated in this perspective.

Figure 6 illustrates the reduction of the radiation emitted by the stored Pa that is obtained with a periodical extraction of the U. Such an extraction limits the radiation level so that the storage of Pa in the cleaning unit may be undetected. The recycling of ^{232}U in the fuel salt weakens the effect of the concealed storage on the fuel's gamma radiation emission. If the Pa remains in the cleaning unit for 3 weeks, the emission due to the Pa that has not been transformed into U becomes very small, making its diversion from the nuclear site much easier.

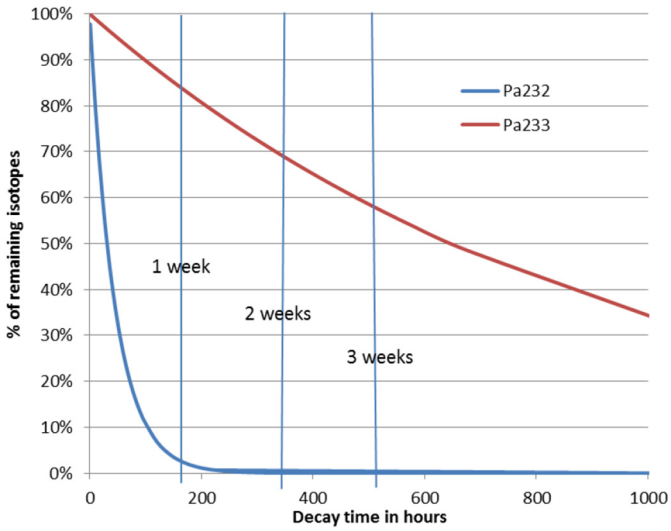

Fig. 5. Remaining Pa isotope fractions after Pa isolation. After 3 weeks of decay, the remaining fractions are 58% ^{233}Pa and 13 ppm ^{232}Pa (respectively 70% and 560 ppm after 2 weeks).

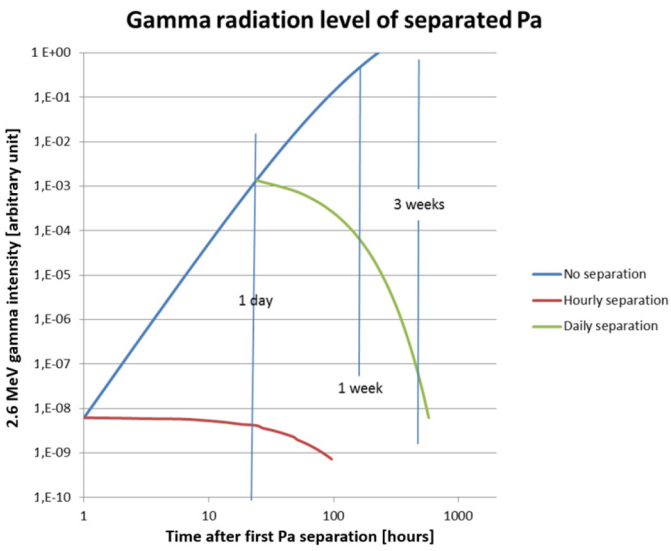

Fig. 6. Influence on the radiation level of a periodic extraction of the U and its descendants. An hourly extraction seems to be the most frequent feasible. A daily extraction is easier to implement but the radiation level of the diverted materials is then five orders of magnitude larger.

3.4 Countermeasures

The main target for Pa or U diversion is the fertile blanket of a breeder reactor. Since an MSFR can be operated without a blanket while ensuring quasi break-even fuel breeding, a first option consists in delivering only blanket-free MSFRs to risk prone states. The need then arises to periodically inject fissile material in the fuel salt so as to ensure good reactivity precludes any diversion of Pa: the flow of necessary fissile material would have to be increased to compensate for the missing U that the diverted Pa would have produced. In the presence of a blanket, the most efficient diversion is that of Pa that rests on the ability to separate the elements in the fuel cleaning unit. The methods used in this unit are not precisely determined and options remain to be chosen. Similarly, work needs to be done to determine how this unit will be organized.

3.4.1 Choice of actinide separation methods

The main proliferation risk is related to the possibility of separating the Pa from the other actinides and from all the ^{232}Pa descendants (U, Th, and Ra essentially). This separation would be done at first when the Pa is extracted from the fuel salt and the blanket and subsequently repeated regularly to conceal the storage of Pa. The two operations can be distinct but must make use of the methodology available in the fuel salt cleaning unit. The less efficient the separation techniques are, the better the proliferation resistance will be. Indeed, the fuel composition adjustment as well as the utilization of the U from breeding do not require a good separation efficiency, since the actinides have to be recycled. It is thus possible to limit the risks associated with these means of separation by opting for inefficient separation methods.

Two methods are being considered for the extraction of the actinides: fluorination and reduction (chemical or electrochemical) in a metallic bath.

Fluorination consists in forming gaseous actinide fluorides via the oxidation of the salt by gaseous fluorine. These fluorides are produced at temperatures ranging between 600 and 900 °C, the gases being subsequently cooled and condensed on inert or reactive (alkaline fluorides) media. Depending on the operating conditions, the U (UF_6) and other actinides (Pa, Np, Pu) are also removed but not the Th, or the minor actinides. The fluorination has another function, i.e. the extraction of some elements such as O, I, S, Se, Te, Cr, Mo which produce fluorides with low condensation temperatures, lower than or similar to that of UF_6. This means that it is not easy to condense the wastes and the actinides separately. Ideally, all the actinide fluorides would be condensed together in a temperature range that would allow the separation of a large part of the wastes. The non-separation of the actinides on distinct physical containers could be a means to reinforce proliferation resistance. This issue needs further study.

Using the fluorination device to periodically remove the U produced by the decay of Pa, by vaporizing only the U, would leave the Th and the Ra with the Pa without suspending the decay chain leading to ^{208}Pb. If the U and the Pa were to be vaporized together (requiring high temperature), then another separation, that of Pa/U, would have to be done immediately, while avoiding the vaporization of PaF_5 (at low temperature).

The reduction of actinides to a metallic state dissolved in liquid Bi is a method that, in principle, does not allow as good a separation of the elements as fluorination (on the order of 90% in one passage, compared to >99% in the case of fluorination) A difficulty, that has already been identified, is

that a fraction of the Th is transferred to the metal along with all of the reduced actinides. It is thus not possible to fully break up the decay chain of ^{232}Pa to ^{208}Pb. This actinide extraction method is less proliferant than the vaporization of the fluorides but it is much more cumbersome because it requires many more steps. It has not yet been validated experimentally but it could be if this method were to be considered essential for the extraction of the lanthanides in the presence of Th (see Sect. 2.3).

The methods used for salt cleaning and ^{233}U extraction from the blanket are still an open issue, the final choice will have to consider the possible consequences on proliferation resistance.

3.4.2 Detection of material transfers

Batch transfers of materials can be observed as they transit through the control chambers, or they can be detected by way of their consequences on the isotopic balances. Provided a full history of the power generated by each reactor, of the amounts of salt processed, and of the fuel temperatures is available, it is possible to monitor the full data set consistency with a simulation program. The reliability and the precision of such a program remain to be assessed.

Note that, to obtain one significant quantity (SQ) of ^{233}U (8 kg) from a diversion of Pa dissolved in Bi, one would have to execute 50 out of site transfers of a Bi mass on the order of 500 kg, the Bi having been stored and processed in the cleaning unit during 2 weeks; the Pa would then have to be concealed for 3 months in a separate installations to finally obtain the desired ^{233}U.

The salts originating from a reactor generate residual heat that can be considerable so that the transfer vehicles need to have a large thermal inertia; their mass must then be large compared to that of the salt they carry. By limiting as tightly as possible the transfer capacities, with the possibility of more frequent transfers if needed, a limit is set on the masses that can be covertly handled. In this respect, the question arises: should the transfers within the fuel cleaning unit be submitted to specific monitoring to allow the detection of illegitimate storage that is required by the diversion of Pa? This unit would then be subdivided to form multiple elements, each containing a chemical reactor or a temporary storage. Each element would be placed in a well surrounded by a radiation shield to reduce the background noise in the unit and allow, via directional radiation detection, to monitor the inputs and outputs of each well. To prevent any modification of the initial design, the space available in each well would be limited to the exact size of the chemical reactor or to the dimensions of the device for the foreseen temporary storage needs.

3.4.3 Fuel storage before processing

Fluorination is a very efficient method for the extraction of the U from the blanket salt, which is the main source of Pa (116 kg inventory in 7.7 m^3 of salt). About 40 L of this salt have to be processed each day (0.63 kg Pa per day). This technique is generally considered efficient for Pa extraction. In order to reduce proliferation risks, it could be advisable to store the samples taken from the blanket for 6 months before transferring to the U extraction unit. During this time span, 99% of the ^{233}Pa has decayed and produced ^{233}U mixed with ^{232}U. In this manner, the source of Pa would not reach the chamber containing the devices that could be used to divert the Pa. However, such a storage would generate higher operating costs so that doing without a blanket altogether might be a preferred solution.

4 Conclusions and recommendations

The present study focuses on a specific threat: the diversion of ^{233}Pa by the host state, exfiltrating it from the site, and processing it in a concealed independent installation, in view of producing nuclear weapons. Our main hypothesis is that the 2.6 MeV gamma radiation emitted by the decay from ^{208}Tl to ^{208}Pb allows the detection of any illegitimate handling of nuclear materials. With this hypothesis, we conclude that it would be impossible to divert nuclear materials directly from the salt circulating in the reactor but that it would be possible to do so by misusing the salt cleaning facility. Means to impede such diversion are mentioned that take advantage of the MSFR's flexibility. Indeed, the concept offers many adaptation possibilities according to various sorts of constraints, e.g. the market or national and international regulations. Proliferation risk analysis can lead to recommendations on the design or operating mode of a future reactor. Such recommendations can be used to attribute a proliferation resistance weight to each design option. These design options will also be given an economic and a regulation compliance weight. The combination of all will govern the design optimization of each reactor. In this first partial and trial application of the GIF PR&PP methodology to the MSFR, we have not encountered particular difficulties, given that this procedure is to be updated constantly in the course of the MSFR concept development.

On the horizon, finally, a ranking of options and complete proliferation resistance studies will have to be performed, the present study being the beginning of a gradual approach of this issue. The next step consists in identifying all the possible threats and quantifying them as we did here and subsequently applying the methodology sequence proposed by GIF and that of the IAEA. To achieve this, interchange and work in common with experts from the GIF PR&PP WG and from the IAEA will be necessary, as well as, if possible, contributions from other fields of expertise, such as the industry.

The authors wish to thank the NEEDS (Nucléaire: Energie, Environnement, Déchets, Société) French program, the IN2P3 department of the National Center for Scientific Research (CNRS) and Grenoble Institute of Technology for their support. They are also thankful to the PR&PP Working Group and to the MSR pSSC of GIF, to Victor Ignatiev from the Kurchatov Institute in Moskow, and to the colleagues of the SAMOFAR European project for fruitful discussions.

Author contribution statement

The study of proliferation resistance of the MSFR presented in this article required expertise in neutronics, reactor physics and chemistry. The studies have been led by Michel Allibert, Simon Moreau and Elsa Merle. Sylvie Delpech has contributed to the chemistry expertise. All the authors of the LPSC laboratory (Daniel Heuer, Delphine Gerardin, Axel Laureau, Elsa Merle, Simon Moreau) were involved in the core calculations presented in the article. All the authors contributed to the interpretation and analysis of the results. Finally, the writing of the article has been coordinated by Michel Allibert and Elsa Merle.

References

1. GIF/PR&PP Working Group, Evaluation Methodology for Proliferation Resistance and Physical Protection of Generation IV Nuclear Energy Systems, GIF/PRPPWG/2011/003 Revision 6 (2011)
2. M. Allibert, M. Aufiero, M. Brovchenko, S. Delpech, V. Ghetta, D. Heuer, A. Laureau, E. Merle-Lucotte, Chapter 7– Molten salt fast reactors, *Handbook of Generation IV Nuclear Reactors* (Woodhead Publishing, Cambridge, 2015)
3. E. Merle, M. Allibert, S. Beils, A. Cammi, B. Carluec, A. Carpignano, S. Delpech, A. Di Ronco, S. Dulla, Y. Flauw, D. Gerardin, A. Gerber, D. Heuer, A. Laureau, S. Lorenzi, M. Massone, A. Rineiski, V. Tiberi, A.C. Uggenti, Design and Safety Studies of the Molten Salt Fast Reactor Concept in the Frame of the SAMOFAR H2020 Project, in *Proceedings of the Generation 4 International Forum Symposium, Paris, France*, *2018*
4. M.E. Whatley et al., Engineering development of the MSBR fuel recycle, Nucl. Appl. Technol. **8**, 170 (1970)
5. H. Boussier et al., The molten salt reactor in generation IV: overview and perspectives, in *Proceedings of the Generation4 International Forum Symposium, San Diego, USA*, *2012*
6. J. Serp et al., The molten salt reactor (MSR) in generation IV: Overview and perspectives, Prog. Nucl. Energy **77**, 308 (2014)
7. D. Heuer, E. Merle-Lucotte, M. Allibert, M. Brovchenko, V. Ghetta, Towards the Thorium Fuel Cycle with Molten Salt Fast Reactors, Ann. Nucl. Energy **64**, 421 (2014)
8. S. Delpech, E. Merle-Lucotte, D. Heuer et al., Reactor physics and reprocessing scheme for innovative molten salt reactor system, J. Fluor. Chem. **130**, 11 (2009)
9. Légifrance, Arrêté du 15 mai 2006 relatif aux conditions de délimitation et de signalisation des zones surveillées et contrôlées et des zones spécialement réglementées ou interdites compte tenu de l'exposition aux rayonnements ionisants, ainsi qu'aux règles d'hygiène, de sécurité et d'entretien qui sont imposées (2006)
10. D. Albright, K. Kramer, Neptunium 237 and Americium: World Inventories and Proliferation Concerns, Inst. Sci. Int. Secur. **6060**, 1 (2005)

Cite this article as: Michel Allibert, Elsa Merle, Sylvie Delpech, Delphine Gerardin, Daniel Heuer, Axel Laureau, Simon Moreau, Preliminary proliferation study of the molten salt fast reactor, EPJ Nuclear Sci. Technol. **6**, 5 (2020)