HAL
open science

Thin Film Coated QCM-Sensors and Pattern Recognition Methods for Discrimination of VOCs

O.C. Lezzar, A. Bellel, M Boutamine, Salah Sahli, Yvan Segui, Patrice Raynaud

To cite this version:

O.C. Lezzar, A. Bellel, M Boutamine, Salah Sahli, Yvan Segui, et al.. Thin Film Coated QCM-Sensors and Pattern Recognition Methods for Discrimination of VOCs. International Journal on Smart Sensing and Intelligent Systems, 2020. hal-03026852

HAL Id: hal-03026852

https://hal.science/hal-03026852

Submitted on 3 Dec 2020

HAL is a multi-disciplinary open access archive for the deposit and dissemination of scientific research documents, whether they are published or not. The documents may come from teaching and research institutions in France or abroad, or from public or private research centers.

L'archive ouverte pluridisciplinaire **HAL**, est destinée au dépôt et à la diffusion de documents scientifiques de niveau recherche, publiés ou non, émanant des établissements d'enseignement et de recherche français ou étrangers, des laboratoires publics ou privés.

Thin Film Coated QCM-Sensors and Pattern Recognition Methods for Discrimination of VOCs

Omar C. Lezzar, A. Bellel*, M. Boutamine
Laboratoire des Etudes de Matériaux Electronique pour Applications Médicales (LEMEAmed), Faculté des Sciences de la technologie, Université Constantine 1, Algeria
*azzedine.bellel@gmail.com

S. Sahli
Laboratoire de Microsystèmes et Instrumentation (LMI), Faculté des Science de la technologie, Université Constantine 1, Algeria
Y. Segui & P. Raynaud
Laboratoire Plasma et Conversion de l'Energie (LAPLACE), Université Paul Sabatier, 118 Route de Narbonne, 31062 Toulouse, France

Abstract—**discrimination and quantification of volatile organic compounds (VOCs) using a non-selective sensor requires a combination of sensors followed by pattern recognition methods. Based on this concept, this paper deals with the discrimination of gas from the responses of several gas sensors coated with different type of polymer. Quartz crystal microbalance (QCM) electrodes were coated from hexamethyldisiloxane (HMDSO), hexamethyldisilazane (HMDSN) and tetraethoxysilane (TEOS) for the elaboration of gas sensors with different chemical affinity towards VOC molecules. The sensitivity of the elaborated QCM-based sensors was evaluated by monitoring the frequency shifts of the quartz exposed to different concentrations of volatile organic compounds, such as; ethanol, benzene and chloroform. The sensors responses data have been used for the identification and quantification of VOCs. The principal component analysis (PCA) and the neural-network (NNs) pattern recognition analysis were used for the discrimination of gas species and concentrations. Good separation among gases has been obtained using the principal component analysis. The feed-forward multi-layer neural network (MLNNs) with a hidden layer and trained by Broyden Fletcher Goldfarb Shanno (BFGS) Quasi Newton algorithm has been implemented in order to identify and quantify the VOCs. By increasing the number of the neuron in the hidden layer, the precision of the estimate concentration increases. The approach is standard, however its application on the elaborated sensors have not been studied in depth so far.**

Keywords- Discrimination of gas; pattern recognition; multi sensors; BFGS Quasi Newton algorithm.

I. INTRODUCTION

Volatile organic compounds (VOCs) can be found in a variety of settings, including industrial and residential sites. These compounds can cause disastrous effects on the environment through premature degradation of the surrounding area and health hazards to people living around the contaminated areas [1]. The identification and monitoring of VOCs have become serious tasks in many countries of the world and are important for the early control of environmental pollution [2]. The need for an accurate, cost-effective and objective system for detection and identification of VOCs is therefore undisputed. In this study, the surface of the QCM electrode is coated with organosilicon material capable of interacting sensitively with the molecules of interest. However, the selectivity of sensors for gas is not possible in most cases. Instead, a multi-sensor system answering to these VOCs in different way is used to identify. The development of such system is based on the choice of sensors and multi-variable analysis techniques [3]. Over the last decade, a lot of important work has been done on developing gas recognition systems from its smell (electronic noses) using pattern recognition methods such as: principal component analysis (PCA) and multi layers neural networks (MLNNs).

PCA is a very useful classification technique widely used in the gas-sensing area [4] and the neural networks are analogue computer systems, which are inspired by studies on the human brain and known to be universal approximates. Multi-layer neural networks (MLNNs) have been successfully used in replacing conventional pattern recognition methods for identification of chemical gases. Implementation of neural network to analyses the response of multi gas sensor offers several advantages over the conventional signal processing in terms of adaptability [5].

In this study, Plasma enhanced chemical vapor deposition (PECVD) technique has been used to produce QCM-coating with different physical and chemical structures layers. The sensing layers were elaborated from pure vapor of HMDSO, HMDSN and TEOS. The sensing properties of the elaborated QCM sensors have been evaluated towards VOCs molecules such as ethanol, chloroform and benzene. Subsequently, the data generated by these sensors are analyzed by pattern recognition methods that allow the identification and quantification of these VOCs. PCA and artificial neural networks multilayer perception (ANNMLP) are used as feature extractor using an experimentally obtained dataset.

II. EXPERIMENTAL

A. Thin Film Elaboration

Thin sensitive coatings were elaborated using PECVD technique [6]. The films were deposited in low frequency plasma reactor from vapors of HMDSO, HMDSN and TEOS in order to obtain sensors with different chemical affinity. The system consisted of parallel symmetrical electrodes, vacuum system (composed of Alcatel primary pump) and a monomer inlet system (Fig 1). The pressure in the reactor was monitored by a pressure measurement system (Pirani).

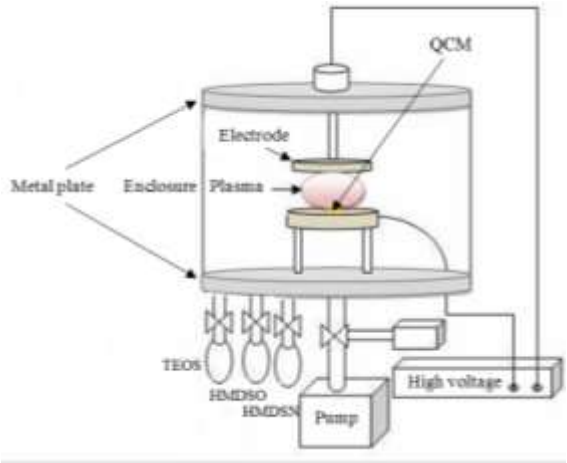

Figure 1. plasma reactor used for QCM Coating.

QCM samples were placed in the grounded lower electrode and the reactor chamber was pumped down to 10 Pa. A constant partial pressure of monomers HMDSO, HMDSN and TEOS was adjusted to 30 Pa and injected to the reactor from the lower electrode. The monomers were varied in order to elaborate VOC sensors with different sensing properties and to create an impression of each VOC analyte.

B. Sensors and Measurement System

The principle of the QCM sensors is based on changes in the fundamental oscillation frequency Δf upon sorption of molecules from the gas phase. To a first approximation the frequency change Δf results from an increase in the oscillating mass Δm. This phenomenon can be described by the Sauerbrey equation (1) [7].

$$\Delta f = -\frac{C_f f_0^2}{A}\Delta m \qquad (1)$$

Where A is the area of the sensitive layer, C_f is the mass sensitivity constant (2.26×10^{-10} m^2 s g^{-1}) of the quartz crystal and f_0 is the fundamental resonance frequency of the quartz crystal.

"Fig 2" shows the schematic view of the experimental setup. The used piezoelectric crystals were AT-Cut 5 MHz quartz crystal (ICM International crystal Manufacturers) with gold plated electrodes (8 mm of diameter) on both sides. The frequency changes of vibrating crystal were measured by a universal frequency counter QCM2000 (USA) connected to a personal computer via RS232 interface. The coated QCM-based sensors were tested for its sensitivity by monitoring the frequency shifts of the quartz exposed to different

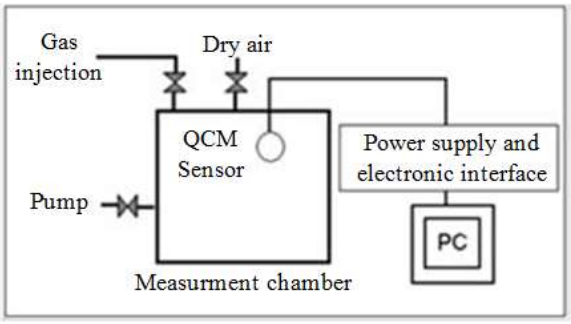

Figure 2. Experimental setup used for sensor response evaluation.

concentrations of VOC vapors. A liquid of known volume and density was introduced in the testing cell using a syringe and heated to evaporate freely. After evaporation and diffusion towards the electrode surface, the injected vapor was subsequently adsorbed onto the surface of the functionalized QCM electrode which induced a frequency shifts. This effect is reversible since the crystal is able to return to its initial state when the desorption occurs after purging the testing cell with dry air. The sensitivity of the elaborated QCM-based sensor was evaluated towards different concentrations of ethanol, benzene and chloroform. The concentration of injected analyte was calculated in parts per million (ppm) according to the following equation:

$$C = \frac{\boldsymbol{\rho}\, V_l}{V} \qquad (2)$$

Where C is the concentration in ppm (1 mg/l ≅ 1 ppm), $\boldsymbol{\rho}$ is the density of liquid sample in mg/l, V_l is the volume of liquid sample in l, V is the volume of the testing cell in l.

The concentrations of the VOCs molecules were varied from about 40 to 200 ppm. The frequency shifts (Hz) versus concentrations (ppm) characteristics were recorded using three QCM sensors (coated with HMDSO, HMDSN and TEOS). Ethanol, Benzene and chloroform were used as analyte species. For discrimination of VOCs, the frequency shifts of balance state obtained from these measurements were used as an input data for pattern recognition methods. all measurements have been carried out at room temperature and humidity relative of about 30%. in order to take into account the effect of humidity which originates from the ambient, the resonance frequency of the QCM was measured and taken as the absolute resonance frequency before measurements.

III. RESULTS AND DISCUSSION

A. Sensors Responses

"Fig 3" shows the typical real time frequency response curves of the coated QCM sensors. For all types of VOCs vapors, the kinetic response characteristics showed that the absolute value of the QCM frequency shift increases gradually with time then reaches a steady value. The maximum responses were taken until the frequency variations were less than 1 Hz. When the maximum adsorption of the QCM sensor was obtained, the test chamber was purged with dry air and the VOCs vapor desorption process took place. The application of

dry air permits fast analyte desorption. The frequency of the crystal back shifted to its initial values indicates full desorption of analytes from the electrode surface. Adsorption-desorption experiments were carried out on three different volatile organic vapors over the same range of concentrations of about 40 to 200 ppm.

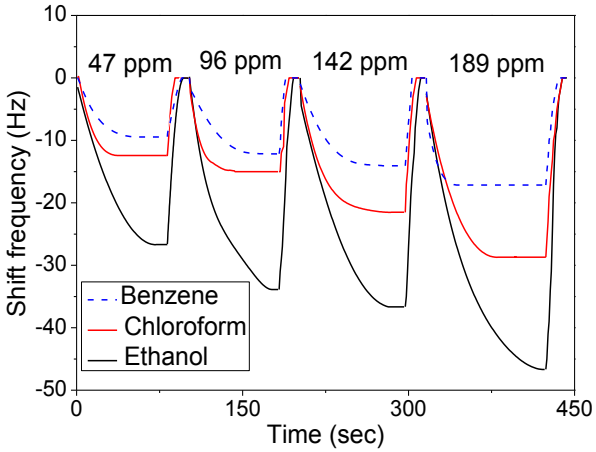

Figure 3. typical sensor response coated with HMDSO for tree types of VOCs.

"Fig 4" shows the maximum value of shift frequency recorded for the three VOCs sensor at different concentrations. The plots are the direct measuring results from three sensors coated with HMDSO, TEOS and HMDSN. It is seen that the responses of the sensors differ each from other. Although all sensors present more affinity for ethanol compared to chloroform and benzene, it is clearly observed that the QCM sensor coated with TEOS present the largest sensitivity for all type VOCs compared to sensor coated with HMDSO and HMDSN. However, responses of QCM sensors elaborated from HMDSO and TEOS shown in (Fig 4a) and (Fig 4c), respectively, presents largest chemical affinity to ethanol and chloroform vapors compared to benzene. Sensor coated with HMDSN (fig 4b) has a great affinity to ethanol than chloroform and benzene. Slight variation of the shift frequency for chloroform and benzene compared to ethanol is observed, therefore, the sensor coated with HMDSN thin film present selectivity for ethanol.

From the sensors responses characteristics, it is clearly seen that there is not of overall selectivity. This drawback can be compensated by the use of the three sensors response data. The combination of sensors is used to obtain a specific fingerprint for each gas and allow the sensors to identify it last.

B. Discrimination of VOCs by Principal Component Analysis

PCA analyzes the data by transforming interdependent coordinates into independent orthogonal set of coordinates called Principal Components (PCs) to maximize their variance [8]. PCA reduces a matrix of large data in a smaller losing less information size to detect the relationship between the data provided by the sensors and grouping them with similar characteristics (group of VOCs) [9]. Its main purpose is to summarize the whole of a complex matrix of data in a graphical representation of two or three main axes [10]. First

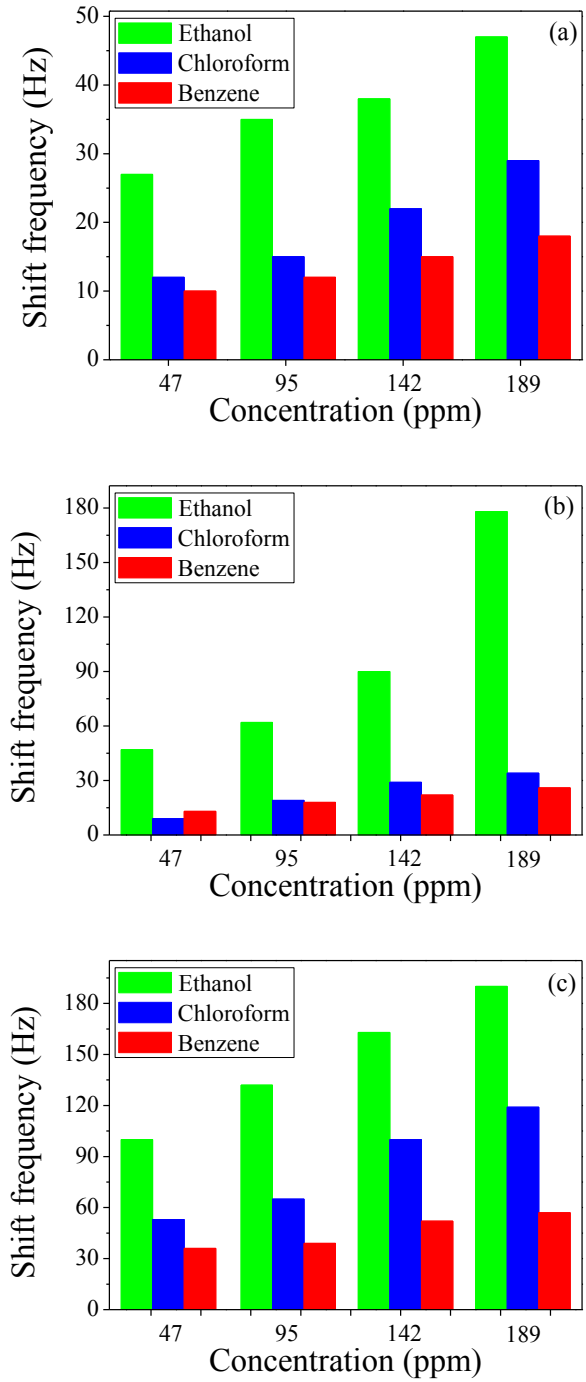

Figure 4. Sensitivity toward different concentrations of VOCs of a QCM sensor coated with: (a) HMDSO, (b) HMDSN and (c) TEOS film

two or three (PCs) axis explains the maximum variance and is most suitable to analyze the data [11-13]; Since PCs are obtained as linear combinations of original variables (sensors). Significant PCs are selected on the basis of their eigenvalues. Thus, PCA not only reveals redundant information in the data set and helps selecting important features (sensors). PCA is provided by the STATISTICA software

"Fig 5" shows the result obtained using PCA method, 12 samples were used each sample has three variable corresponding to each sensor. The raw data shall be entered in the STATISTICA software, a common way for determining the PCs of a data set is by calculating the eigenvectors of the data correlation matrix. It delivers to the end of the analysis a graphical presentation that showing the relationship between the samples grouping them according to their similarities in

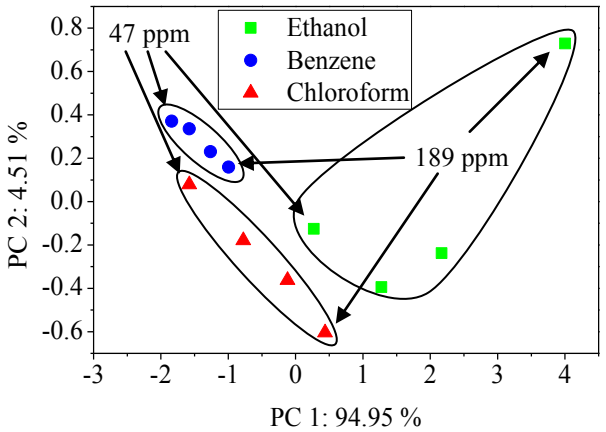

Figure 5. Plot of the second principal component against the first using the data for the three-sensor

the different areas of gases. The PCs are ordered so that PC1 displayed the greatest amount of variance followed by the next greatest PC2 and so on; the first two principal components have a high cumulative variance (99.46%), indicating that the plane PC1 PC2 is very descriptive to classify gases. The results indicate that, with the PCA it was possible to distinguish three groups of gas such as ethanol, chloroform and benzene with different concentrations. The largest concentrations of ethanol are separated from the center of gravity of this latter which is due to the large sensors response to high concentrations of ethanol compared to chloroform and benzene, especially for sensor coated with HMDSN vapor. So, it was possible to identify the ethanol, chloroform and benzene from each other with the PCA method.

C. Identification and Quantification of VOCs by MLNNs

The MLNNs structure used for this purpose is shown in (Fig 6), the input layer is composed of a number of neurons corresponding to the number of used sensors, three neurons each neuron corresponds to a sensor and the output layer corresponds to the number of studied gases (identification or quantification), tree neurons each neurons correspond to a gas. The network may have more neurons in hidden layers. An activation function is applied to each neuron and it is identical to the neurons of the same layer. In this study, the activation function of hidden layer is "tansig" and the activation function of output layer is "logsig" The equations used in the neural network model are shown in Eqs (3)-(4).

Tansig function:

$$tansig(X_m) = \frac{2}{(1+\exp(-2X_m))-1} \quad (3)$$

Logsig function:

$$Logsig(Y_n) = \frac{1}{(1+\exp(-Y_n))} \quad (4)$$

Where: X_m the hidden layer neuron value Eqs (5) and Y_n the output layer neuron value Eqs (6)

$$X_m = \sum_{l=1}^{3} (\Delta f_l . W_{lm}^{ij}) + b_m^{ij} \quad (5)$$

$$Y_n = \sum_{m=1}^{4} (X_m . W_{mn}^{jk}) + b_n^{jk} \quad (6)$$

Where: Δf is the sensors response, W^{ij} is the weight from the input layer to hidden layer, b^{ij} bias of hidden layer, W^{jk} is the weight from the hidden layer to output layer, b^{jk} bias of the output layer, l is the number of the input neurons, m is the number of the hidden layer neurons and n is the number of the output neurons.

To train the network, there are several learning algorithms, a number of researchers have conducted comparative studies of learning algorithms [14]. STATISTICA software offers three types of learning algorithms: Quasi Newton, conjugate gradient and gradient descent.

Quasi-Newton (QN) is an advanced method for training of the MLNNs, QN algorithm used in this study is one of the fastest types of these algorithms and this method converges faster than conjugate gradient and gradient descent methods [15-16]. The Newton algorithm is computed according to the following:

$$\vec{W}(k) = \vec{W}(k-1) - \vec{H}(k)^{-1} . \vec{g}(k) \quad (7)$$

Where:

$$\vec{g}(k) = \frac{\partial E(\vec{W})}{\partial \vec{W}(k)} \quad and \quad \vec{H}(k) = \frac{\partial^2 E(\vec{W})}{\partial^2 \vec{W}(k)}$$

Where: Hessian matrix $\vec{H}(k)$ is the second derivative of the mean squared error function $E(\vec{W})$ at the current values of the weights and biases.

The neural network was trained and validated by samples. The training samples are composed of pairs of data, the input data that includes the responses of the sensors and the output data that includes the identification of gas and estimation of the concentration. These pairs (input, target) are presented to the network to adjust the parameter weights and biases to build the model. The training is completed when the output of the network approaches the interest values (target) when the error Eqs (8) between the desired output (target) and the network output is smaller. As long as the error is large, the learning algorithm continues updating the bias (b) and synaptic weights (w).

$$E_{sc} = \sum_{i=0}^{N} (Y_i - T_i)^2 \quad (8)$$

The training of sensors has been carried out using a large range of analyte concentration and the test of the model has been carried out using unknown concentration for the quantitative and gas identification.

For identification, four neurons in the hidden layer is sufficient to obtain a perfect identification of tested gas, each

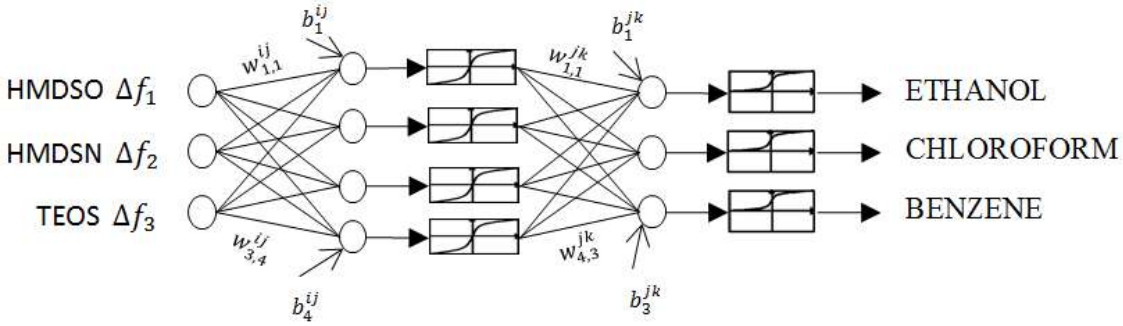

Figure 6. Structure of MLPNN (3:4:3) for identification and quantification of ethanol, chloroform and benzene

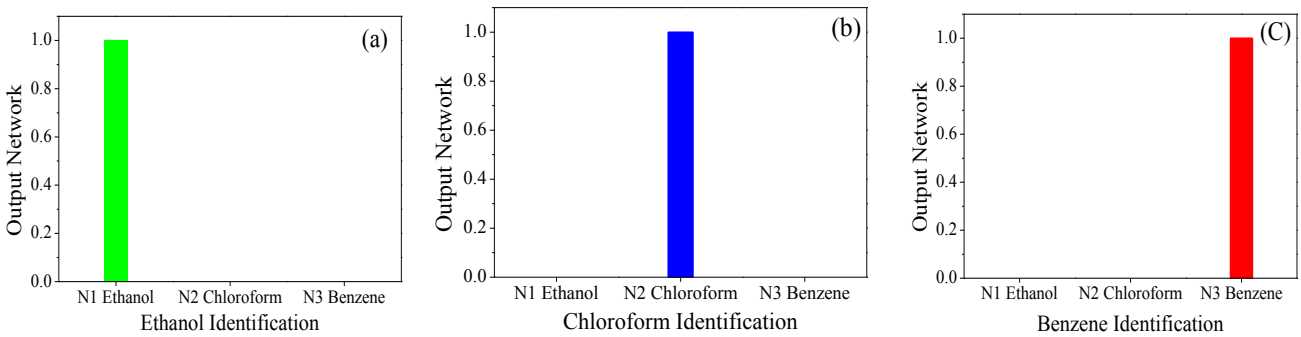

Figure 7. Identification of VOCs by ANNMLP (3:4:3) of (a) Ethanol (b) Chloroform (c) Benzene

TABLE I. Quantification of VOCs

Number of neurons in hidden layer	Target concentration (ppm)			Output network concentration (ppm)		
	Ethanol (N1)	*Chloroform (N2)*	*Benzene (N3)*	*Ethanol (N1)*	*Chloroform (N2)*	*Benzene (N3)*
4	142	0	0	143.61	6.75	3.53
	0	47	0	0	52.71	43.19
	0	0	95	0	1.5	74.13
6	142	0	0	143.61	0	0
	0	47	0	0	37.75	1.61
	0	0	95	0	0.1	102.5
8	142	0	0	148.48	0	0
	0	47	0	0	46.99	0
	0	0	95	0	0	95

output neuron matches to one gas. According to the detected gas, the corresponding neuron has a high level of output and the level of the other two output neurons remains at zero. Therefore in the identification step, the activation function of the output layer is used as a function of threshold; the output neurons can have two values, one for presence of gas and zero for the absence of this latter. The obtained results are illustrated in (Fig 7). For example, if ethanol is introduced into the detection chamber, its corresponding output neuron (N1) shows a high level, whereas, the two remaining output neurons (corresponding to chloroform and benzene N2, N3) show nothing (Fig 7a).

For quantification, the number of neurons in hidden layer was increased to obtain a perfect result. (Fig 8) shows the performance and the accuracy of the neural network with 4, 6 and 8 neurons in the hidden layer. When using only four neurons in the hidden layer, during the training step this network does not achieve the desired accuracy of 100%. The increase in the number of neurons to six, contributes to increase the performance of training. Another model was tested using 8 neurons; this model converges to a perfect quantification of gas and the performance of training reaches

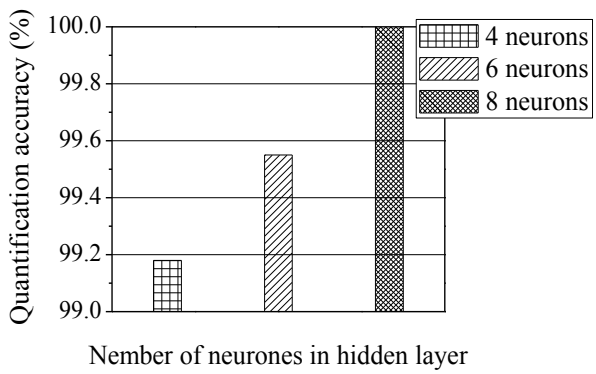

Figure 8. Neural Network quantification performance

100%.

"Table 1" summarizes the result of few training samples of concentration estimation by the network with different number of neuron in hidden layer. Using the structure with four neurons in the hidden layer the estimate concentration presents a great difference between the target and the output of the network. Increasing the number of neurons in the hidden layer can decrease the difference between output and target.

The power of neural networks has led to the identification at 100% of the target gas and estimated its corresponding concentration.

IV. CONCLUSION

In this study, the use of a combination of non-selective sensors has allowed the identification and quantification of gas with the PCA and MLNNs, The application of PCA, that is a method of visual analysis showed a good separation of areas of the studied gas and the neural networks have confirmed this separation by identifying the gas introduced into the chamber. The increase in the number of neurons in the hidden layer increases the network performance, for quantification. The use of four neurons in the hidden layer was enough to get a good result, but the quantification was difficult, which is overcome by the increase of the number of neurons in hidden layer.

REFERENCES

[1] H.T. Nagle, R. Gutierrez Osuna, S.S. Schiffman, "The how and why of electronic noses," IEEE Spectrum 35 (1998) 22–31.

[2] Marıa Jesus Fernandez, and al, "Discrimination of volatile compounds through an electronic nose based on ZnO SAW sensors," Sensors and Actuators B 127 (2007) 277–283.

[3] A. Lay-ekuakille, A. Trotta, "predicting VOC Concentration measurements : cognitive approach for sensor networks," IIIsensor journal 11 (2011) 3923-3030.

[4] Y.Yin, X.Tian "classification of chinese drinks by gas sensors array and combination of the PCA with wilks distribution," Sensors and Actuators B 124 (2007) 393–397.

[5] Ali Gulbag, Fevzullah Temurtas, "A study on transient and steady state sensor data for identification of individual gas concentrations in their gas mixtures," Sensors and Actuators B 121 (2007) 590–599.

[6] N. Guermat, A. Bellel, S. Sahli, Y. Segui, P. Raynaud, "Thin plasmapolymerized layers of hexamethyldisiloxane for humidity sensor development," Thin Solid Films 517 (2009) 4455–4460

[7] Bekir Mumyakmaz, Ahmet Ozmen, M. Ali Ebeoglu, Cihat Tasaltın, "predicting gas concentrations of ternary gas mixtures for predefined 3d sample space," sensors and actuators B 128(2008) 594–602.

[8] Elnaz Barshan, Ali Ghodsi, Zohreh Azimifar, Mansoor Zolghadri Jahromi, "Supervised principal component analysis: Visualization, classification and regression on subspaces and submanifolds," patter recognition 44 (2011) 1357-1371.

[9] X. Peng, X. Li, X. Shi, S. Guo, "evaluation of the aroma quality of chinese traditional soy paste during storage based on principal component analysis," food chemistry 151 (2014) 532-538.

[10] F. Doymaz, J.A. Romagnoli, A. Palazoglu, "A strategy for detection and isolation of sensor failures and process upsets," Chemomet. Intell. Lab. Syst. 55 (2001) 109–123.

[11] A.K. Srivastava, Vinayak P. Dravid, "On the performance evaluation of hybrid and mono class sensor arrays in selective detection of VOCs: A comparative study," Sensors and Actuators B 117 (2006) 244–252.

[12] T. Alizadeh, S. Zeynali,"electronic nose based on the polymer coated saw sensors array for the warfare agent simulants classification," Sensors and actuators B 129 (2008) 412-423.

[13] Li Han, Xiajing Shi, Wendy Wu, F. Louis Kirk, Jin Luo, Lingyan Wang, Derrick Mott, Lisa Cousineau, Stephanie I-Im Lim, Susan Lu, Chuan-Jian Zhong, "Nanoparticle-structured sensing array materials and pattern recognition for VOC detection," Sensors and Actuators B 106 (2005) 431–441.

[14] Ali Gulbag, Feyzullah Temurtas, Ismihan Yusubov, "Quantitative discrimination of the binary gas mixtures using a combinational structure of the probabilistic and multilayer neural networks" sensors and actuators B 131 (2008) 196-204

[15] Ali Gulbag, Fevzullah Temurtas, Cihat Tasaltin, Zafer Ziya Ozturk, "A study on radial basis function neural network size reduction for quantitative identification of individual gas concentrations in their gas mixtures," sensors and actuators B124 (2007) 383-392.

[16] S. Sagiroglu, E. Besdok, M. Erler, "Control chart pattern recognition using artificial neural networks," Turk. J. Electr. Eng. 8 (2000) 137–146.