HAL open science

Eulerian orientations and vertex-connectivity

Florian Hoersch, Zoltán Szigeti

▶ **To cite this version:**

Florian Hoersch, Zoltán Szigeti. Eulerian orientations and vertex-connectivity. Discrete Applied Mathematics, 2021, pp.115 - 124. 10.1016/j.dam.2020.09.022 . hal-03002865

HAL Id: hal-03002865

https://hal.science/hal-03002865v1

Submitted on 17 Oct 2022

HAL is a multi-disciplinary open access archive for the deposit and dissemination of scientific research documents, whether they are published or not. The documents may come from teaching and research institutions in France or abroad, or from public or private research centers.

L'archive ouverte pluridisciplinaire **HAL**, est destinée au dépôt et à la diffusion de documents scientifiques de niveau recherche, publiés ou non, émanant des établissements d'enseignement et de recherche français ou étrangers, des laboratoires publics ou privés.

Distributed under a Creative Commons Attribution - NonCommercial 4.0 International License

Version of Record: https://www.sciencedirect.com/science/article/pii/S0166218X20304479
Manuscript_e75ba14e2290c251c06c99a3b69f45c9

Eulerian orientations and vertex-connectivity

Florian Hörsch, Zoltán Szigeti

Univ. Grenoble Alpes, Grenoble INP, CNRS, G-SCOP, 46 Avenue Félix Viallet, Grenoble, France, 38000.

Abstract

It is well-known that *every* Eulerian orientation of an Eulerian $2k$-edge-connected undirected graph is k-arc-connected. A long-standing goal in the area has been to obtain analogous results for vertex-connectivity. Levit, Chandran and Cheriyan recently proved in [9] that every Eulerian orientation of a hypercube of dimension $2k$ is k-vertex-connected. Here we provide an elementary proof for this result.

We also show other families of $2k$-regular graphs for which every Eulerian orientation is k-vertex-connected, namely the even regular complete bipartite graphs, the incidence graphs of projective planes of odd order, the line graphs of regular complete bipartite graphs and the line graphs of complete graphs.

Furthermore, we provide a *simple* graph counterexample for a conjecture of Frank attempting to characterize graphs admitting at least one k-vertex-connected orientation.

1. Introduction

This paper is concerned with ways of orienting undirected graphs so that certain connectivity requirements are satisfied. The case of edge-connectivity is already well-understood [10, 6, 7]. Here we contribute to the development of the theory of highly vertex-connected orientations.

Let $G = (V, E)$ be an undirected graph. For $X, Y \subseteq V$, we use $\boldsymbol{\delta_G(X, Y)}$ to denote the set of edges between $X \setminus Y$ and $Y \setminus X$ and $\boldsymbol{d_G(X, Y)}$ for $|\delta_G(X, Y)|$. We use $\boldsymbol{\delta_G(X)}$ for $\delta_G(X, V \setminus X)$, $\boldsymbol{d_G(X)}$ for $|\delta_G(X)|$ and $\boldsymbol{d_G(v)}$ for $d_G(\{v\})$. The subgraph induced by X is denoted by $\boldsymbol{G[X]}$ and the number of edges of $G[X]$ is denoted by $\boldsymbol{i_G(X)}$. The graph G is called *k-regular* if $d_G(v) = k$ for all $v \in V$. We denote by $\boldsymbol{N_G(X)}$ the set of *neighbors* of X, that is, the set of vertices in $V \setminus X$ which are adjacent to a vertex in X. We say that G is *k-edge-connected* if $d_G(X) \geq k$ for all $\emptyset \neq X \subsetneq V$. We call G *Eulerian* if every vertex of G is of even degree. An *orientation* of G is a directed graph obtained from G by replacing each edge uv by exactly one of the arcs uv or vu. We denote by $\boldsymbol{L(G)}$ the line graph of G.

Let $D = (V, A)$ be a directed graph. For $X \subseteq V$, we use $\boldsymbol{\delta^-_D(X)}$ for the set of arcs from $V \setminus X$ to X, $\boldsymbol{\delta^+_D(X)}$ for $\delta^-_D(V \setminus X)$, $\boldsymbol{d^-_D(X)}$= $|\delta^-_D(X)|$ for the *in-degree* of X and $\boldsymbol{d^+_D(X)}$= $d^-_D(V \setminus X)$ for the *out-degree* of X. As before, $\boldsymbol{d^-_D(v)}$ and $\boldsymbol{d^+_D(v)}$ are used for $d^-_D(\{v\})$ and $d^+_D(\{v\})$, respectively. If $uv \in A$, we say that u is an *in-neighbor* of v and v is an *out-neighbor* of u. The subgraph induced by X is denoted by $\boldsymbol{D[X]}$. We say that D is *k-arc-connected* if $d^+_D(X) \geq k$ for all $\emptyset \neq X \subsetneq V$. We say that D is *k-vertex-connected* if $|V| \geq k + 1$ and after deleting any vertex set of size $k - 1$ the remaining graph is 1-arc-connected. We call D *Eulerian* if $d^-_D(v) = d^+_D(v)$ for all $v \in V$.

It is well-known that if D is Eulerian, then we have $d^-_D(X) = d^+_D(X)$ for all $X \subseteq V$. Therefore, every Eulerian orientation of a $2k$-edge-connected Eulerian graph results in a directed graph that is k-arc-connected. A fundamental result of Nash-Williams [10] states that a $2k$-edge-connected undirected graph can be oriented such that the resulting directed graph is k-edge-connected. A long-standing goal in the area is to extend this to obtain an analogous result for vertex-connectivity [7]. Frank [5] conjectured a characterization of graphs

Email addresses: `Florian.Hoersch@grenoble-inp.fr` (Florian Hörsch), `Zoltan.Szigeti@grenoble-inp.fr` (Zoltán Szigeti)

© 2020 published by Elsevier. This manuscript is made available under the CC BY NC user license
https://creativecommons.org/licenses/by-nc/4.0/

admitting a k-vertex-connected orientation, see Section 4. For $k = 2$, the Eulerian case was proved by Berg and Jordán [1] and the general case was proved by Thomassen [11]. For $k \geq 3$, the conjecture was disproved by Durand de Gevigney [3]. In Section 4 we provide a counterexample to Frank's conjecture for $k = 3$ that is smaller than that in [3]. We also provide a simple graph counterexample for $k = 3$.

The *hypercube* $\boldsymbol{Q_k}$ of dimension k is the graph whose vertex set is the set of all subsets of $\{1, \ldots, k\}$ and two vertices are connected by an edge if the two corresponding subsets differ in exactly one element. It is well-known that Q_{k+1} can be obtained from two disjoint copies of Q_k by adding an edge between the corresponding vertices of the two copies. Using this construction it is easy to prove that Q_{2k} has an Eulerian orientation that is k-vertex-connected. Recently, Levit, Chandran and Cheriyan proved in [9] the following surprising result on hypercubes.

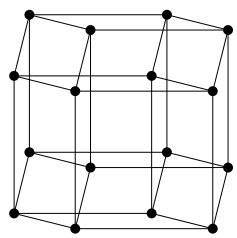

Figure 1: The hypercube Q_4.

Theorem 1 ([9]). *Every Eulerian orientation of a hypercube Q_{2k} is k-vertex-connected.*

One of the contributions of the present paper is to provide a concise proof for Theorem 1, see Subsection 3.5.

Cheriyan [2] posed the question whether there exist other classes of graphs satisfying the following definition.

Definition 2. *A $2k$-regular undirected graph G is* good *if every Eulerian orientation of G is k-vertex-connected,* bad *otherwise.*

In Section 2 we provide a useful reformulation of the definition of bad graphs and show that almost all complete graphs are bad. In Section 3 we present some classes of good graphs, namely the even regular complete bipartite graphs, the incidence graphs of projective planes of odd order, the line graphs of regular complete bipartite graphs and the line graphs of complete graphs.

2. Bad graphs

As a first example of a bad graph, consider a triangle and double each edge. Another example can be found in [1].

Proposition 3 contains a reformulation of the definition of bad graphs that will be frequently used and some simple consequences of it.

Proposition 3. *A $2k$-regular simple graph $G = (V, E)$ is bad if and only if there exists an orientation D of G and a partition of V into non-empty sets Z, S and T such that*

$$d_D^-(v) = d_D^+(v) = k \quad \text{for all } v \in V, \tag{1}$$

$$|Z| = k - 1, \tag{2}$$

$$\text{every edge of } \delta_G(S,T) \text{ is oriented from } S \text{ to } T \text{ in } D. \tag{3}$$

$$G[S] \text{ contains a cycle.} \tag{4}$$

$$d_D^-(S) \leq k \min\{|Z|, |S|\}, \tag{5}$$

$$d_G(S,T) \leq k^2 - k - i_G(Z). \tag{6}$$

Moreover, S can be chosen so that

$$|S| \leq |T|, \tag{7}$$

$$\textit{every vertex } s \textit{ of } S \textit{ has an out-neighbor in } S \textit{ in } D. \tag{8}$$

Proof: (1) – (3) are an immediate consequence of the definition of bad graphs. By (1) and (2), for all $v \in S$, we have $d_D^-(v) = k > |Z|$ and so, by (3), v has at least one in-neighbor in S. This yields (4). Since, by (1), $d_D^-(v) = k$ for all $v \in S$, it follows that $d_D^-(S) \leq k|S|$. Moreover, by (3), all arcs entering S come from Z. As, by (1), $d_D^+(v) = k$ for all $v \in Z$, it follows that $d_D^-(S) \leq d_D^+(Z) \leq k|Z|$. These inequalities imply (5). By (3), (1) and (2), we have (6) : $d_G(S,T) \leq d_D^+(S) = d_D^-(S) \leq d_D^+(Z) = \sum_{z\in Z} d_D^+(z) - i_G(Z) = k|Z| - i_G(Z) = k^2 - k - i_G(Z)$. Also, by definition, (1) – (3) imply that G is bad.

In order to show (7) and (8), let us choose an orientation D of G and a partition Z, S and T of V satisfying (1) – (3) so that $|S|$ is minimum. Since the orientation of G obtained from D by reversing all arcs and the partition Z, T and S of V satisfy (1) – (3), the minimality of $|S|$ implies (7). The fact that G is simple and (4) implies $|S| \geq 2$. Suppose that there exists a vertex v in S that has no out-neighbor in S. Let $S' := S \setminus \{s\}$ and $T' := T \cup \{s\}$. By $|S| \geq 2$, $S' \neq \emptyset$. Then the orientation D of G and the partition Z, S' and T' of V satisfy (1) – (3), hence $|S'| < |S|$ contradicts the minimality of S, so (8) follows. ■

It is easy to see that the complete graphs K_{2k+1} are good for $k \leq 3$. We show that these are the only good complete graphs.

Theorem 4. *The complete graphs K_{2k+1} are bad for all $k \geq 4$.*

Proof: Let $k \geq 4$ be an integer and $G = (V, E)$ the complete graph K_{2k+1}. Let S, T and Z' be three disjoint sets in V such that $|S| = \lfloor \frac{k}{2} \rfloor + 1$ and $|T| = |Z'| = \lceil \frac{k}{2} \rceil + 1$. By $k \geq 4$, $\lfloor \frac{k}{2} \rfloor + 1 + 2(\lceil \frac{k}{2} \rceil + 1) \leq 2k + 1$, so such sets exist. Let $Z := V \setminus (S \cup T)$. Note that $|Z| = k - 1$ and $Z \supseteq Z'$. Let M be the empty set if k is even and a perfect matching of the graph $G' = (T \cup Z', \delta_G(T, Z'))$ if k is odd. Since $|T| = |Z'|$ and G is a complete graph, G' is a regular complete bipartite graph, so M exists. Let us orient all edges in $\delta_G(S, T)$ from S to T, all edges in $\delta_G(T, Z') \setminus M$ from T to Z' and all edges in $\delta_G(Z', S)$ from Z' to S. Note that the set of arcs already defined induces an Eulerian directed graph. Hence the corresponding set F of edges induces an Eulerian subgraph of G. Since G is Eulerian, $G - F$ is also Eulerian. Combining the orientation of F with an arbitrary Eulerian orientation of $G - F$, we have an orientation D of G and a partition $\{Z, S, T\}$ of V that satisfy (1), (2) and (3). Thus, by Proposition 3, $G = K_{2k+1}$ is bad. ■

3. Good graphs

In this section, we show that the following graph families are good: the complete bipartite graphs $K_{2k,2k}$, the incidence graphs of projective planes of even degree, the line graphs of regular complete bipartite graphs, the line graphs of complete graphs and the hypercubes Q_{2k}.

We will apply the following easy observation: for all triples of reals (a, b, c) with $a, b \geq c$, since $(a - c)(b - c) \geq 0$, we have

$$ab \geq c(a + b - c). \tag{9}$$

Let a be a non-negative integer. We use the notation $\binom{a}{2}$ for $\frac{a(a-1)}{2}$ and we apply the following inequality:

$$\binom{a}{2} \geq \max\{a - 1, 2a - 3\}. \tag{10}$$

3.1. Complete bipartite graphs

Let us first consider even regular complete bipartite graphs.

Theorem 5. *The complete bipartite graphs $K_{2k,2k}$ are good for all $k \geq 1$.*

Proof: We assume for a contradiction that the bipartite graph $G = (V_1, V_2; E) = K_{2k,2k}$ is bad. By Proposition 3, there exists an orientation D of G and a partition of $V_1 \cup V_2$ into non-empty sets Z, S and T such that (1) – (6) are satisfied. For $i = 1, 2$, let $\boldsymbol{z_i} := |Z \cap V_i|$, $\boldsymbol{s_i} := |S \cap V_i|$ and $\boldsymbol{t_i} := |T \cap V_i|$. Note that, by (2), we have $z_1, z_2 \geq 0, z_1 + z_2 = |Z| = k - 1$.

Claim 6. *The following hold:*

$$s_1 + s_2 + t_1 + t_2 = 3k + 1, \tag{11}$$

$$1 \leq s_1, s_2, t_1, t_2 \leq k, \tag{12}$$

$$s_1, s_2, t_1, t_2 \in \mathbb{Z}. \tag{13}$$

Proof: By $|V(G)| = 4k$ and $|Z| = k - 1$, we have $s_1 + s_2 + t_1 + t_2 = |V(G)| - |Z| = 4k - (k - 1) = 3k + 1$, so (11) holds. By $S \neq \emptyset$, without loss of generality we may assume that there exists $v \in S \cap V_1$, so $s_1 \geq 1$. Then, by (1) and because G is bipartite, v has k in-neighbors in V_2. By (3), $z_1 + z_2 = k - 1$ and $z_1 \geq 0$, we obtain that at least one of these in-neighbors is in S_2. This yields $s_2 \geq 1$. By similar arguments, we obtain $t_1, t_2 \geq 1$. Moreover, by (1), (3), $v \in S \cap V_1$ and the fact G is a complete bipartite graph, we have $k = d_D^+(v) \geq d_G(v, T \cap V_2) = t_2$ and similarly $s_1, s_2, t_1 \leq k$, so (12) holds. By definition, (13) obviously holds. ■

Claim 7. *The minimum of $s_1t_2 + s_2t_1$ subject to* (11), (12) *and* (13) *is $k^2 + k$.*

Proof: Let the minimum be attained at $(\overline{s}_1, \overline{s}_2, \overline{t}_1, \overline{t}_2)$. First suppose that $k > \overline{s}_1, \overline{t}_2 > 1$. By symmetry, we may suppose that $k > \overline{s}_1 \geq \overline{t}_2 > 1$. It follows from (13) that $(\overline{s}_1', \overline{s}_2', \overline{t}_1', \overline{t}_2') := (\overline{s}_1 + 1, \overline{s}_2, \overline{t}_1, \overline{t}_2 - 1)$ satisfies (11), (12) and (13). This and $\overline{s}_1'\overline{t}_2' + \overline{s}_2'\overline{t}_1' = \overline{s}_1\overline{t}_2 + \overline{t}_2 - \overline{s}_1 - 1 + \overline{s}_2\overline{t}_1 < \overline{s}_1\overline{t}_2 + \overline{s}_2\overline{t}_1$ contradict the fact that the minimum is attained by $(\overline{s}_1, \overline{s}_2, \overline{t}_1, \overline{t}_2)$. So either $\max\{\overline{s}_1, \overline{t}_2\} = k$ or $\min\{\overline{s}_1, \overline{t}_2\} = 1$. Similarly, either $\max\{\overline{s}_2, \overline{t}_1\} = k$ or $\min\{\overline{s}_2, \overline{t}_1\} = 1$. If one of $\overline{s}_1, \overline{s}_2, \overline{t}_1, \overline{t}_2$ equals 1, then, by (11) and (12), the others equal k and we have $\overline{s}_1\overline{t}_2 + \overline{s}_2\overline{t}_1 = k^2 + k$. Otherwise, we have $\max\{\overline{s}_1, \overline{t}_2\} = \max\{\overline{s}_2, \overline{t}_1\} = k$, so (11) yields $\overline{s}_1\overline{t}_2 + \overline{s}_2\overline{t}_1 = k(\min\{\overline{s}_1, \overline{t}_2\} + \min\{\overline{s}_2, \overline{t}_1\}) = k(3k + 1 - 2k) = k^2 + k$. ■

By Claims 6 and 7 and (6), we have $k^2 + k \leq s_1t_2 + s_2t_1 = d_G(S, T) \leq k^2 - k$. Then, by $k \geq 1$, we have a contradiction that completes the proof of Theorem 5. ■

We mention that the previous proof can be easily modified to show that the bipartite graphs obtained from $K_{2k+1,2k+1}$ by deleting a perfect matching are good for all $k \geq 1$.

3.2. Incidence graphs of projective planes

Let G be the incidence graph of a projective plane of order $2k - 1$. It is well-known that G is a simple connected $2k$-regular bipartite graph with unique color classes V_1 and V_2 both being of size $(2k-1)^2 + (2k-1) + 1 = 4k^2 - 2k + 1$. The main property of G is the following:

$$\text{any two vertices in } V_i \text{ have exactly one common neighbor for } i \in \{1, 2\}. \tag{14}$$

Theorem 8. *The incidence graph $G = (V_1, V_2; E)$ of a projective plane of order $2k - 1$ is good for all $k \geq 1$.*

Proof: We assume for a contradiction that G is bad. Then, by Proposition 3, there exists an orientation D of G and a partition of $V_1 \cup V_2$ into non-empty sets Z, S and T such that (1) – (8) are satisfied.

For $i = 1, 2$, let $\boldsymbol{S_i}$, $\boldsymbol{T_i}$, $\boldsymbol{Z_i}$ be $V_i \cap S, V_i \cap T$ and $V_i \cap Z$, respectively, and let $\boldsymbol{s_i} := |S_i|$, $\boldsymbol{t_i} := |T_i|$ and $\boldsymbol{z_i} := |Z_i|$. By (7), we have either $s_1 \leq t_1$ or $s_2 \leq t_2$, say $s_1 \leq t_1$.

Claim 9. $s_1t_1 \leq z_2k^2 + d_G(S, T)(2k - 1)$.

Proof: For every pair $(s,t) \in S_1 \times T_1$, by (14), exactly one (s,t)-path of length 2 exists, and it traverses either Z_2 or $\delta_G(S,T)$. For a vertex $z \in Z_2$, since $d_G(z,S_1)+d_G(z,T_1) \leq d_G(z) = 2k$, exactly $d_G(z,S_1)d_G(z,T_1) \leq k^2$ such paths traverse z. For an edge $uv \in \delta_G(S,T)$ with $u \in V_1$, at most $d_G(v)-1 = 2k-1$ such paths traverse uv. Then the number s_1t_1 of pairs $(s,t) \in S_1 \times T_1$ is at most $z_2k^2 + d_G(S,T)(2k-1)$. ■

Since G is bipartite, (4) implies that $s_2 \geq 2$ and hence, by (1), (3) and (14), S_2 has at least $k+k-1$ neighbors in $S_1 \cup Z_1$. Then, by $z_1 \leq k-1$ and $t_1 \geq s_1$, we have $t_1 \geq s_1 \geq 2k-1-z_1 \geq k$. Hence, by (9) applied to (s_1,t_1,k), $s_1+t_1+z_1 = |V_1|$, Claim 9, (2), (6), $|V_1| = 4k^2-2k+1$ and $k \geq 1$, we have $k(|V_1|-z_1-k) \leq s_1t_1 \leq z_2k^2 + d_G(S,T)(2k-1) \leq (k-1-z_1)k^2 + (k^2-k)(2k-1) = k(3k^2-4k+1-z_1k) < k(|V_1|-k-z_1)$, a contradiction that completes the proof of Theorem 8. ■

3.3. Line graphs of regular complete bipartite graphs

Let us consider the regular complete bipartite graph $K_{k+1,k+1}$ and denote its bipartition classes by $\{x_1,\ldots,x_{k+1}\}$ and $\{y_1,\ldots,y_{k+1}\}$. This part deals with its line graph $L(K_{k+1,k+1})$: the vertex set of $L(K_{k+1,k+1})$ is the set $\{(x_i,y_j) : 1 \leq i,j \leq k+1\}$ and two distinct vertices (x_i,y_j) and $(x_{i'},y_{j'})$ are connected by an edge if $i=i'$ or $j=j'$. We mention that $L(K_{k+1,k+1})$ is also called *Rook graph*. The graph $L(K_{k+1,k+1})$ for $k=2$ is given in Figure 2. Note that $L(K_{k+1,k+1})$ is $2k$-regular.

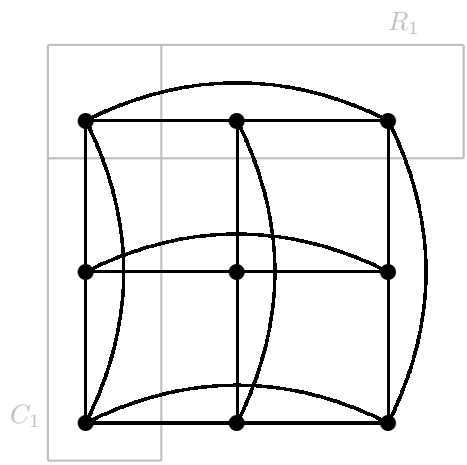

Figure 2: f$L(K_{3,3})$, the row R_1 and the column C_1.

By a *row* R_i (resp. *column* C_j) of $L(K_{k+1,k+1})$ we denote the vertex set $\{(x_i,y_j) : 1 \leq j \leq k+1\}$ (resp. $\{(x_i,y_j) : 1 \leq i \leq k+1\}$). The set of rows (resp. columns) is denoted by $\boldsymbol{\mathcal{R}}$ (resp. $\boldsymbol{\mathcal{C}}$). By a *line* we mean a row or a column. The set of lines is denoted by $\boldsymbol{\mathcal{L}}$. Observe that $\mathcal{R}$ contains $k+1$ rows, $\mathcal{C}$ contains $k+1$ columns, $\mathcal{L}$ contains $2k+2$ lines and every line contains $k+1$ vertices. Note that, by construction, it follows that

$$\text{each line of} \quad L(K_{k+1,k+1}) \quad \text{is a clique of } L(K_{k+1,k+1}), \tag{15}$$

$$\text{a line and a stable set of} \quad L(K_{k+1,k+1}) \quad \text{have at most one vertex in common.} \tag{16}$$

It is well-known (and can easily be derived from Kőnig's theorem [8] on edge-colorings of bipartite graphs) that $L(K_{k+1,k+1})$ is a perfect graph. This means that every induced subgraph H of $L(K_{k+1,k+1})$ has a vertex coloring with $\omega(H)$ colors, where $\boldsymbol{\omega}(H)$ denotes the size of a maximum clique of H. Our proof will use the perfectness of $L(K_{k+1,k+1})$.

Theorem 10. *$L(K_{k+1,k+1})$ is good for all $k \geq 1$.*

Proof: Let $\boldsymbol{G} = L(K_{k+1,k+1})$ for some $k \geq 1$ and assume for a contradiction that G is bad. Then, by Proposition 3, there exists an orientation D of G and a partition of $V(G)$ into non-empty sets Z, S and T such that (1) – (6) are satisfied. For a line $L_i \in \mathcal{L}$, let $\boldsymbol{s_i}$, $\boldsymbol{t_i}$ and $\boldsymbol{z_i}$ denote $|L_i \cap S|, |L_i \cap T|$ and $|L_i \cap Z|$, respectively. Since $|L_i| = k+1$, the following holds:

$$s_i + t_i + z_i = k + 1. \tag{17}$$

Let $\boldsymbol{\mathcal{R}_S}$ (resp. $\boldsymbol{\mathcal{R}_T}$) be the set of rows that are disjoint from T (resp. S). The column classes $\boldsymbol{\mathcal{C}_S}$ and $\boldsymbol{\mathcal{C}_T}$ are similarly defined. Let $\boldsymbol{\mathcal{L}_S} := \mathcal{R}_S \cup \mathcal{C}_S$, $\boldsymbol{\mathcal{L}_T} := \mathcal{R}_T \cup \mathcal{C}_T$ and $\boldsymbol{\mathcal{L}'}$ the rest of the lines.

Note that, by definition, we have

$$\text{the intersection of a line of } \mathcal{L}_S \text{ and a line of } \mathcal{L}_T \text{ is in } Z. \tag{18}$$

In the first part of the proof we show that $\mathcal{L}_S$ or $\mathcal{L}_T$ contains at least half of the lines. We first provide a lower bound on the number of lines in $\mathcal{L}_S \cup \mathcal{L}_T$.

Claim 11. *$\mathcal{L}_S \cup \mathcal{L}_T$ contains at least $k+2$ lines.*

Proof: Since each line L_i in $\mathcal{L}'$ intersects both S and T, we may apply (9) to $(s_i, t_i, 1)$ and we get, by (15) and (17), that L_i contains at least $s_i + t_i - 1 = k - z_i$ edges between S and T. Then, by (6), since the $G[L_i]$'s are edge-disjoint, since a vertex belongs to two lines and by (2), we have $(k-1)k \geq d_G(S,T) \geq \sum_{L_i \in \mathcal{L}'}(k - z_i) \geq |\mathcal{L}'|k - 2|Z| > (|\mathcal{L}'| - 2)k$, thus $|\mathcal{L}'| \leq k$. Hence, by $|\mathcal{L}| = 2k+2$, we have $|\mathcal{L}_S| + |\mathcal{L}_T| = |\mathcal{L}| - |\mathcal{L}'| \geq (2k+2) - k = k+2$. ■

Now we show in several steps that one of $\mathcal{L}_S$ and $\mathcal{L}_T$ is almost empty.

Claim 12. *One of $\mathcal{R}_S, \mathcal{R}_T, \mathcal{C}_S$ and $\mathcal{C}_T$ is empty.*

Proof: Suppose for a contradiction that none of $\mathcal{R}_S, \mathcal{R}_T, \mathcal{C}_S$ and $\mathcal{C}_T$ are empty. Then, by (9) applied to $(|\mathcal{R}_S|, |\mathcal{C}_T|, 1)$ and to $(|\mathcal{R}_T|, |\mathcal{C}_S|, 1)$, Claim 11, (2) and (18), we have $|\mathcal{R}_S||\mathcal{C}_T| + |\mathcal{R}_T||\mathcal{C}_S| \geq (|\mathcal{R}_S| + |\mathcal{C}_T| - 1) + (|\mathcal{R}_T| + |\mathcal{C}_S| - 1) = |\mathcal{L}_S| + |\mathcal{L}_T| - 2 \geq (k+2) - 2 > |Z| \geq |\mathcal{R}_S||\mathcal{C}_T| + |\mathcal{R}_T||\mathcal{C}_S|$, a contradiction. ■

By Claim 12, we may suppose that $\mathcal{C}_S$ is empty. Indeed, by symmetry of G, we can exchange the rows and columns of G if needed, we may hence suppose that one of $\mathcal{C}_S$ and $\mathcal{C}_T$ is empty. Observe that in the digraph obtained from D by reversing all arcs the partition of $V(G)$ into Z, T and S satifies (1), (2) and (3). Therefore, eventually exchanging the role of S and T and reversing the arcs of D, we may suppose that $\mathcal{C}_S$ is empty.

Claim 13. *At most one column contains at least k vertices of S.*

Proof: Suppose there exist two columns C_i and C_j such that $s_i, s_j \geq k$. By $\mathcal{C}_S = \emptyset$, we have $t_i, t_j \geq 1$. Then, by (17) and $z_i \geq 0$, we have $s_i, s_j = k$ and $t_i, t_j = 1$. Let $X := T \cap (C_i \cup C_j)$. Note that $|X| = 2$, $X \subseteq T$ and $(C_i \cup C_j) \setminus X \subseteq S$. So, by (3), all the neighbors of X in C_i and C_j are in-neighbors of X, and hence all the arcs leaving X enter columns different from C_i and C_j. Then, by $s_i = s_j = k$, (15), (1), $|\mathcal{C}| = k+1$ and since there exists exactly one edge between any vertex u and any column not containing u, we have $2k \leq d_D^-(X) = d_D^+(X) \leq 2(k-1)$, a contradiction. ■

Claim 14. *$\mathcal{L}_S$ contains at most one line.*

Proof: Suppose for a contradiction that $|\mathcal{L}_S| \geq 2$. Since $\mathcal{C}_S$ is empty, we have $|\mathcal{R}_S| \geq 2$. Then, for every column C_j, we have $s_j + z_j \geq |\mathcal{R}_S| \geq 2$. By Claim 13, at most one column C_i satisfies $s_i \geq k$. Thus, by (17), we have $t_j + z_j = (k+1) - s_j \geq (k+1) - (k-1) = 2$ for every column $C_j \neq C_i$. So we may apply (9) to $(s_j, t_j, 2 - z_j)$ and, by (15) and (17), we get that every column $C_j \in \mathcal{C}' := \mathcal{C} \setminus (\mathcal{C}_T \cup \{C_i\})$ contains at least $(2 - z_j)(k-1)$ edges between S and T. By (18), the columns in $\mathcal{C}_T$ contain at least $|\mathcal{R}_S||\mathcal{C}_T|$ vertices of Z. Then, by (6), since the $G[C_j]$'s are edge-disjoint, $|\mathcal{C}| = k+1$, by (2) and $|\mathcal{R}_S| \geq 2$, we have $(k-1)k \geq d_G(S,T) \geq \sum_{C_j \in \mathcal{C}'} d_{G[C_j]}(S,T) \geq \sum_{C_j \in \mathcal{C}'}(2 - z_j)(k-1) \geq (k-1)\big(2(k - |\mathcal{C}_T|) - ((k-1) - |\mathcal{R}_S||\mathcal{C}_T|)\big) > (k-1)(k + (|\mathcal{R}_S| - 2)|\mathcal{C}_T|) \geq (k-1)k$, a contradiction. ■

We can now see that $\mathcal{L}_T$ contains at least half of the lines. Indeed, Claims 11 and 14 imply that

Claim 15. *$\mathcal{L}_T$ contains at least $k+1$ lines.*

In the second part of the proof our goal is to give an upper bound on the size of S. In order to do that we consider a particular vertex-coloring of $\boldsymbol{H} := G[S]$. Since G is a perfect graph, there exists a vertex-coloring $\boldsymbol{\mathcal{I}}$ of H by $\omega(H)$ colors.

Claim 16. *S contains at most $2\omega(H)-1$ vertices.*

Proof: Let $\boldsymbol{U}$ be the set of vertices in the lines of $\mathcal{L}_T$, $\boldsymbol{Z'} = Z \cap U$ and $\boldsymbol{Z''} = Z \setminus Z'$. Let I be a color class in $\mathcal{I}$. Since I is a stable set in S, by (16), each vertex in U has at most one neighbor in I and each vertex of Z'' has at most two neighbors in I. Hence

$$d_D^-(S) = \sum_{I \in \mathcal{I}} |\delta_D^-(S) \cap \delta_D^-(I)| \leq \sum_{I \in \mathcal{I}} (|Z'| + 2|Z''|) = \omega(H)(|Z'| + 2|Z''|). \tag{19}$$

Let v be a vertex in $I \subseteq S \subseteq V \setminus U$. It follows, by (15) and Claim 15, that v has at least $|\mathcal{L}_T| \geq k+1$ neighbors in U. So I has at least $|I|(k+1)$ neighbors in U, each being, by (3), either a vertex in Z' or an out-neighbor of v in D. Hence

$$d_D^+(S) = \sum_{I \in \mathcal{I}} |\delta_D^+(S) \cap \delta_D^+(I)| \geq \sum_{I \in \mathcal{I}} (|I|(k+1) - |Z'|) = |S|(k+1) - \omega(H)|Z'|. \tag{20}$$

Then, (1), (19), (20), $Z' \cup Z'' = Z$ and (2) yield that

$$|S| \leq \lfloor \frac{2\omega(H)(k-1)}{k+1} \rfloor \leq 2\omega(H) - 1.$$

■

Since each clique of G is contained in a line, we can choose a line $\boldsymbol{L_i}$ that contains $\omega(H)$ vertices of S. Note that $s_i \geq 1$. Let $\boldsymbol{S_i} := L_i \cap S$ and $\boldsymbol{S'_i} := S \setminus S_i$.

Finally, in order to derive a contradiction, we provide bounds for $d_G(S,T)$ and $d_G(S,Z)$.

Claim 17. $s_i t_i + k s_i - (|Z| - z_i) + |S'_i| \leq d_G(S,T)$.

Proof: By (15), we have $s_i t_i = d_G(S_i, T \cap L_i)$. Next observe that every element of S_i has k neighbors which are not in L_i and these neighborhoods are disjoint. As at most $|Z \setminus L_i| + |S'_i|$ of these vertices are in $Z \cup S$, we obtain that at least $ks_i - (|Z \setminus L_i| + |S'_i|)$ of them are in T. By (15), this yields that $ks_i - (|Z| - z_i) - |S'_i| \leq d_G(S_i, T \setminus L_i)$. Now consider a vertex $v \in S'_i$. By (15), Claim 15 and (2), v at least $|\mathcal{L}_T| - |Z| \geq (k+1) - (k-1) = 2$ neighbors in T. This yields $2|S'_i| \leq d_G(S'_i, T)$. By $d_G(S_i, T \cap L_i) + d_G(S_i, T \setminus L_i) + d_G(S'_i, T) = d_G(S,T)$, the claim follows. ■

Claim 18. $d_G(S,Z) \leq s_i|Z| + |S'_i|$.

Proof: By (15), we have $s_i z_i = d_G(S_i, Z \cap L_i)$. Every element of $Z \setminus L_i$ has, by $S_i \subseteq L_i$, at most one neighbor in S_i and clearly at most $|S'_i|$ in S'_i. This gives, by Claim 16 and $\omega(H) = s_i$, that $d_G(Z \setminus L_i, S) \leq (|S'_i| + 1)(|Z| - z_i) \leq s_i(|Z| - z_i)$. Since $S'_i \cap L_i = \emptyset$, every element of S'_i has at most one neighbor in $L_i \cap Z$ and hence $d_G(Z \cap L_i, S'_i) \leq S'_i$. By $d_G(S_i, Z \cap L_i) + d_G(S, Z \setminus L_i) + d_G(S'_i, Z \cap L_i) = d_G(S,Z)$, the claim follows. ■

Now we are ready to conclude. Claims 17 and 18, (3) and (1) yield that $s_i t_i + k s_i - (|Z| - z_i) + |S'_i| \leq d_G(S,T) \leq d_D^+(S) = d_D^-(S) \leq d_G(S,Z) \leq s_i|Z| + |S'_i|$. Then, by (17), (2), $t_i \geq 0$ and $s_i \geq 1$, we have $0 \geq s_i t_i + s_i(k - |Z|) - (|Z| - z_i) = s_i t_i + s_i - (s_i + t_i - 2) = t_i(s_i - 1) + 2 \geq 2$, a contradiction. This completes the proof of Theorem 10. ■

3.4. Line graphs of complete graphs

Let us consider the complete graph K_{k+2} and denote its vertex set by $\boldsymbol{U}$. This part deals with its line graph $L(K_{k+2})$. Note that a pair of adjacent (resp. non-adjacent) edges in K_{k+2} corresponds to a pair of adjacent (resp. non-adjacent) vertices in $L(K_{k+2})$. Since each edge of K_{k+2} is adjacent to exactly $2k$ other edges, $L(K_{k+2})$ is $2k$-regular.

Theorem 19. *$L(K_{k+2})$ is good for all $k \geq 1$.*

Proof: Let $\boldsymbol{G} = L(K_{k+2})$ for some $k \geq 1$ and assume for a contradiction that G is bad. Clearly, $k \geq 2$. Then, by Proposition 3, there exists an orientation D of G and a partition of $V(G)$ into non-empty sets Z, S and T such that (1) – (8) are satisfied.

For a vertex set X of G, we denote by $\boldsymbol{E_X}$ the corresponding edge set of K_{k+2}. For a vertex $v \in U$, let $\boldsymbol{s_v}$, $\boldsymbol{t_v}$ and $\boldsymbol{z_v}$ be the number of edges incident to v that are in E_S, E_T and E_Z, respectively. We call an ordered pair (e, f) of edges of K_{k+2} an (S,T)-*pair* if $e \in E_S$ and $f \in E_T$. The sets of adjacent and non-adjacent (S,T)-pairs are denoted by $\boldsymbol{P_1}$ and $\boldsymbol{P_2}$, respectively. Observe that $|P_1| = d_G(S,T)$ and $|S||T| = |P_1| + |P_2|$.

First we provide an upper bound on $|P_1|$.

Claim 20. $|P_1| \leq k^2 - k - \max\{0, k-4\}$.

Proof: Note that every pair of edges in E_Z which shares a vertex v in K_{k+2} provides an edge in $G[Z]$. It follows that a vertex $v \in U$ provides exactly $\binom{z_v}{2}$ edges in $G[Z]$. Then, as every such pair shares exactly one vertex in K_{k+2}, by (10) and (2), we have $i_G(Z) = \sum_{v \in U} \binom{z_v}{2} \geq \sum_{v \in U}(z_v - 1) = 2|E_Z| - |U| = 2(k-1) - (k+2) = k-4$. Thus, by (6), we have $|P_1| = d_G(S,T) \leq k^2 - k - i_G(Z) \leq k^2 - k - \max\{0, k-4\}$. ■

We next prove an upper bound on $|P_2|$.

Claim 21. $2|P_2| \leq (k-1)|P_1| + k^2 - 3k + 2$.

Proof: A 4-cycle of K_{k+2} is called *special* if it contains a non-adjacent (S,T)-pair. Let $\mathcal{C}$ be the set of special cycles. A special cycle is said to be of *type* i if it contains i edges of E_Z for $i = 0, 1, 2$. Let $\boldsymbol{n_i}$ denote the number of special cycles of type i for $i = 0, 1, 2$.

Note that every special cycle of type 1 or 2 contains exactly one non-adjacent (S,T)-pair and every special cycle of type 0 contains at most 2 non-adjacent (S,T)-pairs. Further, every non-adjacent (S,T)-pair can be completed to a 4-cycle in two different ways, so every non-adjacent (S,T)-pair is part of exactly 2 special cycles. It follows that

$$2|P_2| = \sum_{p \in P_2} \sum_{\substack{C \in \mathcal{C} \\ p \subsetneq E(C)}} 1 = \sum_{C \in \mathcal{C}} \sum_{\substack{p \in P_2 \\ p \subsetneq E(C)}} 1 \leq 2n_0 + n_1 + n_2. \tag{21}$$

Observe that every special cycle of type i contains $2-i$ adjacent (S,T)-pairs for $i = 0, 1, 2$. Also every adjacent (S,T)-pair can be completed to a 4-cycle by adding one of $k-1$ vertices, so every adjacent (S,T)-pair is contained in exactly $(k-1)$ 4-cycles. This yields

$$2n_0 + n_1 = \sum_{C \in \mathcal{C}} \sum_{\substack{p \in P_1 \\ p \subsetneq E(C)}} 1 = \sum_{p \in P_1} \sum_{\substack{C \in \mathcal{C} \\ p \subsetneq E(C)}} 1 \leq \sum_{p \in P_1} (k-1) = (k-1)|P_1|. \tag{22}$$

Observe that every special cycle of type 2 contains 2 non-adjacent edges of E_Z, every pair of non-adjacent edges is contained in exactly two 4-cycles and there are at most $\binom{k-1}{2}$ pairs of non-adjacent edges of E_Z. This implies that

$$n_2 \leq 2\binom{k-1}{2} = k^2 - 3k + 2. \tag{23}$$

The inequalities (21), (22) and (23) imply the claim. ■

We use the previous results to show an upper bound on $|S|$.

Claim 22. $|S| \leq k$.

Proof: Otherwise, by (7), we have $|T| \geq |S| \geq k+1$. By (2), we have $|S|+|T| = \binom{k+2}{2}-(k-1)$. Then, by (9) applied to $(|S|, |T|, k+1)$, we have $|S||T| \geq (k+1)(\binom{k+2}{2}-2k) = \frac{k^3+k+2}{2}$. Then Claims 21 and 20 and $k \geq 1$ yield $k^3+k \leq 2|S||T|-2 = 2|P_2|+2|P_1|-2 \leq (k+1)|P_1|+k^2-3k \leq (k+1)(k^2-k-\max\{0,k-4\})+k^2-3k = k^3+k-(5k-k^2)-\max\{0,k^2-3k-4\} = k^3+k-\max\{k(5-k),2(k-2)\} < k^3+k$, a contradiction. ■

The following result shows that the edges of E_S are adjacent to many edges of $E_{S\cup Z}$.

Claim 23. *For every $uv \in E_S$, $s_u + z_u + s_v + z_v \geq k+3$.*

Proof: By (1), (3) and (8), the vertex of D that corresponds to uv has k in-neighbors in $S \cup Z$ and at least one out-neighbor in S in D and their corresponding edges in K_{k+2} are incident to u or v. As uv is counted in s_u and s_v, we obtain that $s_u + z_u + s_v + z_v \geq k+3$. ■

The next result shows that S forms a clique in G.

Claim 24. *The edges of E_S are pairwise adjacent.*

Proof: Suppose that E_S contains two non-adjacent edges v_1v_2 and v_3v_4. Note that K_{k+2} has 6 edges having both ends in $\{v_1, v_2, v_3, v_4\}$. Applying Claim 23 to both v_1v_2 and v_3v_4 and using Claim 22 and (2), we obtain $2(k+3) \leq \sum_{i=1}^{4}(s_{v_i} + z_{v_i}) \leq |E_S| + |E_Z| + 6 \leq 2k+5$, a contradiction. ■

Claim 25. *The edges of E_S do not form a triangle in K_{k+2}.*

Proof: Suppose that E_S forms a triangle on v_1, v_2, v_3 in K_{k+2}. Observe that every edge in E_Z is incident to at most one of v_1, v_2, v_3 and every edge in E_S is incident to exactly two of v_1, v_2, v_3. Applying Claim 23 to all 3 edges of E_S, we get $3(k+3) \leq \sum_{uv\in E_S}(s_u+z_u+s_v+z_v) = 2\sum_{i=1}^{3}(s_{v_i}+z_{v_i}) \leq 2(2|E_S|+|E_Z|) \leq 2(6+(k-1))$, that contradicts $k \geq 2$. ■

By Claims 24 and 25, the edges of E_S are all incident to a vertex $\boldsymbol{v}$ in K_{k+2}. Let $\boldsymbol{Q}$ be the clique of size $k+1$ in G that corresponds to the set of edges incident to v in K_{k+2}. Note that $|S| = |Q \cap S| = s_v, |Q \cap T| = t_v$ and $|Q \cap Z| = z_v$. Since every edge of E_Z that is not incident to v is adjacent to at most 2 edges of E_S in K_{k+2}, each vertex of $Z \setminus Q$ is adjacent to at most 2 vertices of S in G. This implies, by (3), that $d_D^-(S) \leq 2|Z\setminus Q|+s_vz_v$. By (4), we have $|S| \geq 2$. Then, by (1), $s_v = |S| \geq 2$, (2), $G[S]$ is a clique, $|Q| = k+1$ and (10), we have $0 = \sum_{u\in S}(d_D^-(u)-k) = d_D^-(S)+\binom{|S|}{2}-|S|k \leq 2|Z\setminus Q|+s_vz_v+\binom{s_v}{2}-s_v(s_v-1+t_v+z_v) \leq 2(k-1-z_v)-2t_v-\binom{s_v}{2} = 2(s_v-2)-\binom{s_v}{2} < 0$, a contradiction. This completes the proof of Theorem 19. ■

3.5. Hypercubes

In this subsection we provide a short self-contained proof for Theorem 1 that is restated below. Let us recall that Q_k has 2^k vertices and Q_k is k-regular.

Theorem 26. *The hypercube Q_{2k} is good for all $k \geq 1$.*

The key ingredient of the proof of Theorem 26 in [9] is a lemma proved by the authors of [9] stating that $|N_{Q_{2k}}(X)| \geq k\min\{k, |X|+1\}$ for all $X \subseteq V(Q_{2k})$ with $1 \leq |X| \leq 2^{2k-1}$. The following lemma extends this for dimension of arbitrary parity. Our contribution is an elementary proof of Lemma 27.

Lemma 27. *For all $X \subseteq V(Q_k)$,*
(a) $|N_{Q_k}(X)| \geq \lfloor\frac{k}{2}\rfloor(|X|+1)$ *if* $1 \leq |X| \leq \lfloor\frac{k}{2}\rfloor$,
(b) $|N_{Q_k}(X)| \geq \lfloor\frac{k}{2}\rfloor\lceil\frac{k}{2}\rceil$ *if* $\lfloor\frac{k}{2}\rfloor \leq |X| \leq 2^{k-1}$.

First we show how to prove Theorem 26 using Lemma 27 as pointed out in [9].

Proof: (of Theorem 26) We assume for a contradiction that Q_{2k} is bad. Then, by Proposition 3, there exists an orientation D of Q_{2k} and a partition of $V(Q_{2k})$ into non-empty sets Z, S and T such that (1) – (6) are satisfied. Then, by (5), (1), (3), Lemma 27 and (2), we have $k\min\{|Z|,|S|\} \geq d_D^-(S) = d_D^+(S) \geq |N_{2k}(S)| - |Z| \geq k\min\{k, |S|+1\} - k + 1 = k\min\{|Z|,|S|\} + 1$, a contradiction. ■

It is easy to verify that for all positive integers k, the following holds:

$$\lfloor\frac{k}{2}\rfloor\lceil\frac{k}{2}\rceil + \lfloor\frac{k+1}{2}\rfloor = \lfloor\frac{k+1}{2}\rfloor\lceil\frac{k+1}{2}\rceil. \tag{24}$$

We introduce two functions $f, g : \mathbb{Z}_+ \to \mathbb{Z}_+$: let $\boldsymbol{f(k)} := \lfloor\frac{k}{2}\rfloor(\lceil\frac{k}{2}\rceil + 1) - 1$ and $\boldsymbol{g(k)} := 2^k - f(k)$. We need the following inequality for $g(k)$.

Proposition 28. *For $k \geq 1$, $2g(k) + 2 - 2^k \geq \lfloor\frac{k+1}{2}\rfloor\lceil\frac{k+1}{2}\rceil$.*

Proof: We first show by induction that $2^k \geq 4\lceil\frac{k}{2}\rceil - \lfloor\frac{k}{2}\rfloor + 1$ for all $k \geq 2$. For $k = 2$ it is true. If it is true for some $k \geq 2$, then, by the induction hypothesis, it is true for $k+1 : 2^{k+1} = 2^k + 2^k \geq 4 + 4\lceil\frac{k}{2}\rceil - \lfloor\frac{k}{2}\rfloor + 1 \geq 4\lceil\frac{k+1}{2}\rceil - \lfloor\frac{k+1}{2}\rfloor + 1$.

By (24), the inequality of the claim is equivalent to $2^k + 4 \geq 3\lfloor\frac{k}{2}\rfloor\lceil\frac{k}{2}\rceil + 2\lfloor\frac{k}{2}\rfloor + \lceil\frac{k}{2}\rceil$ for $k \geq 1$. For $k = 1, 2$ it is true. If it is true for some $k \geq 2$, then, by the above inequality, the induction hypothesis and (24), it is true for $k+1 : 2^{k+1} + 4 = 2^k + 2^k + 4 \geq 4\lceil\frac{k}{2}\rceil - \lfloor\frac{k}{2}\rfloor + 1 + 3\lfloor\frac{k}{2}\rfloor\lceil\frac{k}{2}\rceil + 2\lfloor\frac{k}{2}\rfloor + \lceil\frac{k}{2}\rceil = 3\lfloor\frac{k+1}{2}\rfloor\lceil\frac{k+1}{2}\rceil + 2\lfloor\frac{k+1}{2}\rfloor + \lceil\frac{k+1}{2}\rceil$. ■

Proof: (of Lemma 27) (a) First we prove a lower bound on the number of neighbors of an arbitrary vertex set X of Q_k and then we show how this yields (a).

Claim 29. *$|N_{Q_k}(X)| \geq \sum_{v\in X} d_{Q_k}(v) - 2\binom{|X|}{2}$ for all $X \subseteq V(Q_k)$.*

Proof: Let $\boldsymbol{H} := Q_k[X]$ and $\boldsymbol{A_v} := N_{Q_k}(v)\backslash X$ for all $v \in X$. It is known by the sieve formula that $|\cup_{v\in X} A_v| - \sum_{v\in X}|A_v| + \sum_{u,v\in X}|A_u \cap A_v| \geq 0$. Note that $|\cup_{v\in X} A_v| = |N_{Q_k}(X)|$, $\sum_{v\in X}|A_v| = \sum_{v\in X}(d_{Q_k}(v) - d_H(v)) = \sum_{v\in X} d_{Q_k}(v) - 2|E(H)|$. Since $|N_{Q_k}(\{u\}) \cap N_{Q_k}(\{v\})| = 0$ if $uv \in E(Q_k)$ and ≤ 2 if $uv \in E(\overline{Q}_k)$, we have $\sum_{u,v\in X}|A_u \cap A_v| \leq \sum_{uv\in E(H)} 0 + \sum_{uv\in E(\overline{H})} 2 = 2|E(\overline{H})|$. By $|E(H)| + |E(\overline{H})| = \binom{|X|}{2}$, the claim follows. ■

Let $X \subseteq V(Q_k)$ with $1 \leq |X| \leq \lfloor\frac{k}{2}\rfloor$. By Claim 29 and the k-regularity of Q_k, we have $|N_{Q_k}(X)| \geq \sum_{v\in X} d_{Q_k}(v) - 2\binom{|X|}{2} = |X|(k+1-|X|) \geq \lfloor\frac{k}{2}\rfloor(|X|+1) + (\lfloor\frac{k}{2}\rfloor - |X|)(|X|-1) \geq \lfloor\frac{k}{2}\rfloor(|X|+1)$.

(b) We prove this case by induction on k. For $k = 1$, it is trivial. For $k = 2$, it follows since Q_2 is connected. Suppose that the lemma is true for some $k \geq 2$. We use that Q_{k+1} can be obtained from two disjoint copies $\boldsymbol{Q^1}$ and $\boldsymbol{Q^2}$ of Q_k by adding an edge between the corresponding vertices of Q^1 and Q^2. Let $\boldsymbol{X} \subsetneq V(Q_{k+1})$ with $\lfloor\frac{k+1}{2}\rfloor \leq |X| \leq 2^k$, $\boldsymbol{X_i} := X \cap V(Q^i)$, $\boldsymbol{X_i^c} := V(Q^i) \setminus X_i$, $\boldsymbol{X_i^*} := X_i^c \setminus N_{Q^i}(X_i)$. By the construction of Q_{k+1} from Q^1 and Q^2, we have, for $i \in \{1, 2\}$,

$$|N_{Q_{k+1}}(X) \cap V(Q^i)| \geq \max\{|X_{3-i}| - |X_i|, |N_{Q^i}(X_i)|\}. \tag{25}$$

The following claim strengthens the induction hypothesis by relaxing the condition on the size of X_i.

Claim 30. *$|N_{Q^i}(X_i)| \geq \lfloor\frac{k}{2}\rfloor\lceil\frac{k}{2}\rceil$ if $\lfloor\frac{k}{2}\rfloor \leq |X_i| \leq g(k)$.*

Proof: For $|X_i| \leq 2^{k-1}$, by the induction hypothesis, we are done. Otherwise, $|X_i^*| \leq |X_i^c| < 2^{k-1}$. For $|X_i^*| \geq \lfloor\frac{k}{2}\rfloor$, by $N_{Q^i}(X_i) \supseteq N_{Q^i}(X_i^*)$ and the induction hypothesis, we have $|N_{Q^i}(X_i)| \geq |N_{Q^i}(X_i^*)| \geq \lfloor\frac{k}{2}\rfloor\lceil\frac{k}{2}\rceil$. For $|X_i^*| \leq \lfloor\frac{k}{2}\rfloor - 1$, by $2^k - |X_i^c| = |X_i| \leq g(k) = 2^k - f(k)$, we have $|N_{Q^i}(X_i)| = |X_i^c| - |X_i^*| \geq f(k) - (\lfloor\frac{k}{2}\rfloor - 1) = \lfloor\frac{k}{2}\rfloor\lceil\frac{k}{2}\rceil$. ■

We finish the proof by distinguishing several cases.

Case 1. $1 \le |X_i| \le \lfloor \frac{k}{2} \rfloor$ for $i = 1, 2$. By (25), Lemma 27(a), $|X_i| \le \lfloor \frac{k}{2} \rfloor$ and $|X| \ge \lfloor \frac{k+1}{2} \rfloor$, we have
$|N_{Q_{k+1}}(X)| \ge \sum_{i=1}^{2} |N_{Q^i}(X_i)| \ge \sum_{i=1}^{2} \lfloor \frac{k}{2} \rfloor (|X_i|+1) \ge \sum_{i=1}^{2} |X_i|(\lfloor \frac{k}{2} \rfloor + 1) = |X|(\lfloor \frac{k}{2} \rfloor + 1) \ge \lfloor \frac{k+1}{2} \rfloor \lceil \frac{k+1}{2} \rceil$.

Case 2. $|X_1| \ge g(k) + 1$. By (25), $|X| \le 2^k$ and Proposition 28, we have
$|N_{Q_{k+1}}(X)| \ge |N_{Q_{k+1}}(X) \cap V(Q^2)| \ge |X_1| - |X_2| = 2|X_1| - |X| \ge 2g(k) + 2 - 2^k \ge \lfloor \frac{k+1}{2} \rfloor \lceil \frac{k+1}{2} \rceil$.

Case 3. $\lfloor \frac{k}{2} \rfloor \le |X_2| \le |X_1| \le g(k)$. By (25), Claim 30 and $k \ge 2$, we have
$|N_{Q_{k+1}}(X)| \ge \sum_{i=1}^{2} |N_{Q^i}(X_i)| \ge 2\lfloor \frac{k}{2} \rfloor \lceil \frac{k}{2} \rceil \ge \lfloor \frac{k+1}{2} \rfloor \lceil \frac{k+1}{2} \rceil$.

Case 4. $1 \le |X_2| \le \lfloor \frac{k}{2} \rfloor \le |X_1| \le g(k)$. By (25), Claim 30, Lemma 27(a), $k \ge 2$ and (24), we have
$|N_{Q_{k+1}}(X)| \ge \sum_{i=1}^{2} |N_{Q^i}(X_i)| \ge \lfloor \frac{k}{2} \rfloor \lceil \frac{k}{2} \rceil + \lfloor \frac{k}{2} \rfloor (|X_2| + 1) \ge \lfloor \frac{k}{2} \rfloor \lceil \frac{k}{2} \rceil + \lfloor \frac{k+1}{2} \rfloor = \lfloor \frac{k+1}{2} \rfloor \lceil \frac{k+1}{2} \rceil$.

Case 5. $X_2 = \emptyset$ and $\lfloor \frac{k}{2} \rfloor \le |X_1| \le g(k)$. By (25), Claim 30, $|X| \ge \lfloor \frac{k+1}{2} \rfloor$ and (24), we have
$|N_{Q_{k+1}}(X)| \ge |N_{Q^1}(X)| + |N_{Q_{k+1}}(X) \cap V(Q^2)| = |N_{Q^1}(X)| + |X| \ge \lfloor \frac{k}{2} \rfloor \lceil \frac{k}{2} \rceil + \lfloor \frac{k+1}{2} \rfloor = \lfloor \frac{k+1}{2} \rfloor \lceil \frac{k+1}{2} \rceil$.

Up to symmetry of X_1 and X_2, this case distinction is complete. Thus Lemma 27(b) is true for $k + 1$. ■

4. Counterexamples for Frank's conjecture

We now come back to the question of characterizing graphs admitting at least one k-vertex-connected orientation. Frank [5] conjectured that an undirected graph $G = (V, E)$ with $|V| > k$ has a k-vertex-connected orientation if and only if for all $X \subseteq V$ with $|X| < k$, $G - X$ is $(2k - 2|X|)$-edge-connected. Durand de Gevigney [3] provided a counterexample to this conjecture for $k = 3$ on 10 vertices. Here we present a counterexample for $k = 3$ on 6 vertices. Starting from our example we also present a simple graph counterexample for $k = 3$. The idea of the constructions comes from [3, 4].

Let G_1 be the first graph in Figure 3. It is easy to check that for $k = 3$, G_1 satisfies the condition of Frank's conjecture. Suppose now that G_1 has a 3-vertex-connected orientation D_1. Then for any i, $D_1 - v_i - v_{i+2}$ is 1-arc-connected, so v_{i+1} has one grey arc entering and one grey arc leaving. Hence, the grey cycle is oriented as a circuit in D_1. It follows that in $D_1 - v_1 - v_4$ the two arcs between $\{v_2, v_3\}$ and $\{v_5, v_6\}$ form a directed cut and hence D_1 is not 3-vertex-connected. Thus G_1 is a counterexample to Frank's conjecture for $k = 3$. Note that since G_1 is 6-regular and has no 3-vertex-connected orientation, G_1 is bad.

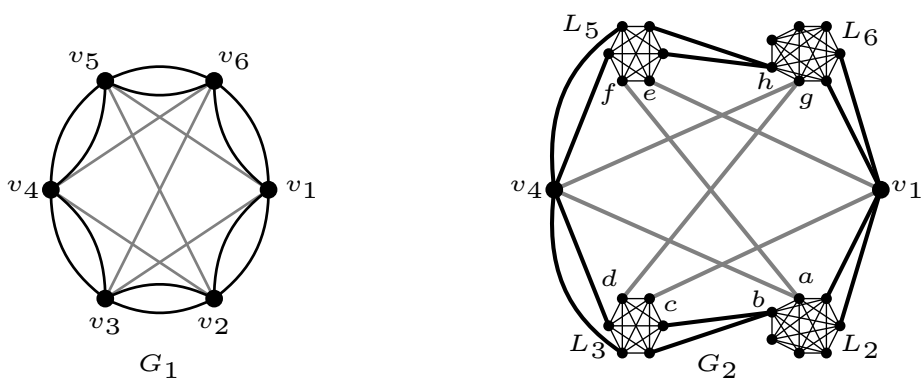

Figure 3: Counterexamples to Frank's conjecture.

We now construct a simple graph G_2 which is a counterexample to Frank's conjecture for $k = 3$. We replace the vertices v_2, v_3, v_5 and v_6 in G_1 by appropriate cliques, see Figure 3. Note that G_2 is a simple graph. It is easy to check that for $k = 3$, G_2 satisfies the condition of Frank's conjecture. Suppose now that G_2 has a 3-vertex-connected orientation $D_2 = (V, A)$. By reversing all arcs if necessary, we may suppose that

$gd \in A$. Since $D_2 - b - v_4$ is 1-arc-connected, $cv_1 \in A$. Since $D_2 - a - b$ (resp. $D_2 - g - h$) is 1-arc-connected, one of the two arcs between v_1 and L_2 (resp. L_6) goes from v_1 to L_2 (resp. L_6) and the other one goes from L_2 (resp. L_6) to v_1. Then, since $d^-_{D_2}(v_1) = 3 = d^+_{D_2}(v_1)$, $v_1e \in A$. Finally, since $D_2 - h - v_4$ is 1-arc-connected, $fa \in A$. It follows that in $D_2 - v_1 - v_4$ the two arcs gd and fa between $L_2 \cup L_3$ and $L_5 \cup L_6$ form a directed cut and hence D_2 is not 3-vertex-connected. Thus the simple graph G_2 is a counterexample to Frank's conjecture for $k = 3$.

5. Conclusion

We provided five classes of good graphs in this paper. Further investigations could allow the identification of more classes of good graphs. We are particularly interested in the graph class described below which extends two of the classes of good graphs dealt with in this paper.

Let W be a set of size w. The Hamming graph $H(d, w)$ is the graph with vertex set W^d, where two vertices are adjacent if they differ in exactly one coordinate. Note that $H(1, w)$ is the complete graph K_w, $H(d, 2)$ is the hypercube of dimension d and $H(2, w)$ is the line graph of $K_{w,w}$. It is easy to see that $H(d, w)$ is $d(w-1)$-regular. We conjecture that $H(d, w)$ is a good graph whenever $d(w-1)$ is even and $d \geq 2$. This would generalize Theorems 10 and 26.

6. Acknowledgement

This research was initialized while the second author visited Joseph Cheriyan at the University of Waterloo. This visit was financed by means of the University of Waterloo. Joseph Cheriyan posed the problem, suggested the classes of graphs to consider and even the proof steps of Theorem 5. We thank Joseph Cheriyan for the helpful discussions on the topic. We also thank Zoli Király for his advice to extend Lemma 27 for arbitrary dimension.

7. References

References

[1] A. R. Berg and T. Jordán, Two-connected orientations of Eulerian graphs, *J. Graph Theory*, 52(3): 230–242, 2006.

[2] J. Cheriyan, personal communication, 2017

[3] O. Durand de Gevigney, On Frank's conjecture on k-connected orientations, *J. Comb. Theory, Ser. B*, 141: 105-114, 2020.

[4] O. Durand de Gevigney, personal communication, 2017

[5] A. Frank, Connectivity and network flows, in *Handbook of Combinatorics* 1: 111–177, Elsevier, Amsterdam, 1995.

[6] A. Frank, *Connections in Combinatorial Optimization*, Oxford University Press, 2011.

[7] Z. Király and Z. Szigeti, Simultaneous well-balanced orientations of graphs, *J. Comb. Theory, Ser.B*, 96(5): 684–692, 2006.

[8] D. Kőnig, Gráfok és alkalmazásuk a determinánsok és a halmazok elméletére, *Matematikai és Természettudományi Értesítő*, 34: 104–119, 1916.

[9] M. Levit, L.S. Chandran, J. Cheriyan, On Eulerian orientations of even-degree hypercubes, *Operations research Letters*, 46(5): 553–556, 2018.

[10] C.St.J.A. Nash–Williams, On orientations, connectivity, and odd vertex pairings in finite graphs, *Canad. J. Math.*, 12: 555–567, 1960.

[11] C. Thomassen, Strongly 2-connected orientations of graphs. *J. Comb. Theory, Ser.B*, 110: 67–78, 2015.