HAL open science

One-ended 3-manifolds without locally finite toric decompositions

Sylvain Maillot

To cite this version:

Sylvain Maillot. One-ended 3-manifolds without locally finite toric decompositions. Rendiconti dell'Istituto di Matematica dell'Universita di Trieste: an International Journal of Mathematics, In press, 10.48550/arXiv.2011.05015 . hal-02997660

HAL Id: hal-02997660

https://hal.science/hal-02997660v1

Submitted on 10 Nov 2020

HAL is a multi-disciplinary open access archive for the deposit and dissemination of scientific research documents, whether they are published or not. The documents may come from teaching and research institutions in France or abroad, or from public or private research centers.

L'archive ouverte pluridisciplinaire **HAL**, est destinée au dépôt et à la diffusion de documents scientifiques de niveau recherche, publiés ou non, émanant des établissements d'enseignement et de recherche français ou étrangers, des laboratoires publics ou privés.

One-ended 3-manifolds without locally finite toric decompositions

Sylvain Maillot

November 9, 2020

Abstract

We introduce a class of one-ended open 3-manifolds which can be 'recursively' defined from two compact 3-manifolds, and construct examples of manifolds in this class which fail to have a toric decomposition in the sense of Jaco-Shalen and Johannson.

1 Introduction

To start off, we introduce a class $\mathcal{C}$ of open 3-manifolds which we view as a candidate for 'the smallest class of open 3-manifolds for which the classification problem is interesting.' It is large enough so that exotic phenomena due to the topology at infinity can occur; yet it is small enough so that algorithmic problems—in particular the homeomorphism problem—make sense, and seem to have a decent chance of being decidable.

Throughout the paper we work in the PL category. Let (X, Y, F_+, F_-, f, g) be a 6-tuple with the following properties:

- Both X and Y are connected, orientable, compact 3-manifolds.
- ∂X is connected.
- ∂Y has exactly two components, which are F_+ and F_-.
- f is an orientation-reversing homeomorphism from ∂X to F_-.
- g is an orientation-preserving homeomorphism from F_+ to F_-.

To such a 6-tuple, we associate an open 3-manifold obtained by gluing together X and an infinite sequence of copies of Y using the homeomorphisms f, g. More precisely, we set

$$M(X, Y, F_+, F_-, f, g) = X \cup_{f_0} Y \times \{0\} \cup_{g_0} T \times \{1\}_{g_1} Y \times \{2\} \cup_{g_2} \cdots$$

where the gluing homeomorphisms are given by $f_0(x) = (f(x), 0)$ for all $x \in X$, and $g_n(x, n) = (g(x), n + 1)$ for all $x \in Y$ and $n \in \mathbf{N}$. We denote by $\mathcal{C}$ the class of 3-manifolds obtained in this way.

Remarks.

- Every 3-manifold in $\mathcal{C}$ is orientable, connected, and one-ended. Moreover, it has an exhaustion by compact submanifolds with connected boundary of fixed genus. We can call *genus* of a manifold $M \in \mathcal{C}$ the minimal genus of ∂X in a presentation of M as $M(X, Y, F_+, F_-, g, f)$.
- We can fix triangulations of X and Y with respect to which f and g are simplicial, so that algorithmic problems are well-defined. For the same reason, there are countably many manifolds in $\mathcal{C}$ up to homeomorphism.
- The class $\mathcal{C}$ contains the original Whitehead manifold [Whi35] as well as many other contractible 3-manifolds not homeomorphic to $\mathbf{R}^3$. It does not contain those with infinite genus. Nor does it contain all Whitehead manifolds of genus 1, since there are uncountably many of those, as shown by McMillan [McM62].
- One can define in a similar way a class $\mathcal{C}_n$ for each dimension n, so that $\mathcal{C} = \mathcal{C}_3$. This construction is a special case of that of [Mai12] of manifolds associated to a topological automaton. The automaton has two states corresponding to X, Y. Thus the classification for $\mathcal{C}_2$ follows from the main theorem of [Mai12]. The one-ended case, however, is much simpler than that; it is a straightforward consequence of the Kerekjarto classification theorem. Indeed, an orientable, one-ended surface is classified by its genus $h \in [0, +\infty]$, which is easily seen to be $+\infty$ if Y has positive genus, and equal to the genus of X otherwise.

In this paper, we are interested in the question of which, among the exotic phenomena concerning open 3-manifolds, occur in the class $\mathcal{C}$. We already mentioned that $\mathcal{C}$ contains contractible manifolds which are not homeomorphic to $\mathbf{R}^3$. For instance, the original Whitehead manifold has genus 1, the manifold X being a solid torus, and Y being the exterior of the Whitehead link in S^3.

Likewise, the manifold M_1 constructed by the author in [Mai08] is easily seen to belong to $\mathcal{C}$. It has genus 1, the manifold X being again a solid torus, and Y being the product of a circle by a compact orientable surface of genus 1 with two boundary components. This manifold has the property that it is impossible to split it as a connected sum of prime manifolds, even allowing infinitely many factors, and allowing the factors to be noncompact. Note that the first such example was constructed by P. Scott [Sco77]. Scott's example has infinitely many ends (in fact, its space of ends is a Cantor set due to the treelike nature of the construction.) Thus it does not belong to $\mathcal{C}$.

The manifold M_3 from [Mai08] does not have a locally finite splitting along 2-tori into submanifolds that are Seifert-fibered or atoroidal, thus showing that the theory of Jaco-Shalen [JS79] and Johannson [Joh79] is difficult to extend to open 3-manifolds. This construction was inspired by Scott's work, so M_3 also has a Cantor set's worth of ends, and does not belong to the class $\mathcal{C}$. The goal of this paper is to give an example of a manifold in $\mathcal{C}$ with the same property.

In order to state the result, we recall some terminology. Let M be an orientable 3-manifold. It is *irreducible* if every embedded 2-sphere in M bounds a 3-ball. An embedded torus in M is *incompressible* if it is π_1-injective. Following W. Neumann and G. Swarup [NS97], we call an embedded torus T in M *canonical* if it is incompressible and for every embedded, incompressible torus $T' \subset M$, there is an embedded torus T'' isotopic to T' such that $T \cap T'' = \emptyset$.

Definition. Let $\mathcal{T} = \{T_i\}_{i \in I}$ be a family of pairwise disjoint canonical tori in M. We say that $\mathcal{T}$ is *complete* if every canonical torus in M is isotopic to T_i for some $i \in I$.

Theorem 1.1. *There is an open 3-manifold M_0 in the class $\mathcal{C}$ with the following properties.*

i. M_0 is irreducible.

ii. Every complete family of canonical tori in M_0 fails to be locally finite.

The key to constructing such a manifold is to ensure that there is a sequence $\{T_n\}$ of pairwise nonisotopic canonical tori in M_0 which fails to be locally finite no matter how the representatives of the various isotopy classes are chosen, because they are *trapped* by some compact subset $K \subset M_0$ which has to intersect all of them. In the paper [Mai08], the T_n's are pairwise nonhomologous, and separate different ends of the manifold M_3. By contrast, M_0 has only one end, and its T_n's are all null-homologous, making it harder to prove that they are not isotopic.

In order to construct M_0, we first construct a 3-*orbifold* $\mathcal{O}_0$ with similar properties, interpreted in the orbifold sense. It is irreducible, and contains a sequence $\{P_n\}$ of *pillows*, i.e. spheres with four conical points of order 2, which is trapped by some compact set. The orbifold $\mathcal{O}_0$ has underlying space $\mathbf{R}^3$ and is designed so that it is easy to see that the P_n's are pairwise nonisotopic. Then the manifold M_0 is constructed as a 2-fold cover of $\mathcal{O}^3$. The T_n's are taken to be the preimages of the P_n's under the covering map.

The structure of the paper is as follows: in Section 2 we construct the 3-orbifold $\mathcal{O}_0$ and prove its various properties. In Section 3 we will prove Theorem 1.1 by constructing the manifold M_0 and showing that it has the required properties.

Acknowledgements This work is partially supported by Agence Nationale de la Recherche through Grant ANR-12-BS01-0004.

I would like to thank Grégoire Montcouquiol, Michel Boileau and Luisa Paoluzzi for useful conversations.

2 The orbifold case

2.1 Definition of the orbifold $\mathcal{O}_0$

Throughout the paper, we work in the PL or smooth category, and all manifolds and orbifolds are assumed to be connected and orientable. For terminology about 3-orbifolds, we refer to [BMP03].

Let $\mathcal{O}$ be a 3-orbifold. Two 2-suborbifolds F, F' are *isotopically disjoint* if there is a suborbifold F'' isotopic to F' and disjoint from F. An incompressible toric suborbifold is *canonical* if it is isotopically disjoint from every incompressible toric 2-suborbifold.

Let K be a compact subset of $\mathcal{O}$. A sequence $\{F_n\}$ of 2-suborbifolds is said to be *trapped by* K if no 2-suborbifold isotopic to any F_n is disjoint from K. Thus, it is impossible to make $\{F_n\}$ locally finite by choosing different representatives of the various isotopy classes.

Let B be a 3-manifold homeomorphic to the 3-ball and let α (resp. c) be a properly embedded arc (resp. circle) in B. Assume that α and c are disjoint. Then we say that $\alpha \cup c$ is *trivial* (resp. a *Hopf tangle*) if α is trivial and c bounds an embedded disk disjoint from α (resp. meeting α transversally in a single point.) To justify the terminology, note that if another 3-ball B' is glued to B and α is extended to an unknot c' in $B \cup B'$ in the obvious way, then $c \cup c'$ is an unlink (resp. a Hopf link.)

We now come to our main construction: throughout the article we let $\mathcal{O}_0$ be a 3-orbifold with the following properties: its underlying space is Euclidean 3-space. Its singular locus $\Sigma_{\mathcal{O}_0}$ consists in three unknotted, properly embedded lines L_0, L_{12}, and L_{34}, and four sequences of embedded circles (c_i^n) with $n \in \mathbf{N}$ and $i \in \{1, 2, 3, 4\}$. The general relative positions of the various components of $\Sigma_{\mathcal{O}_0}$ are shown on Figure 1. For each $n \in \mathbf{N}$, $c_1^n \cup c_2^n \cup c_3^n \cup c_4^n$ is a four component link contained in a 'box' B_n whose intersection with $L_{12} \cup L_{34}$ consists of a trivial 4-tangle $\alpha_1^n \cup \alpha_2^n \cup \alpha_3^n \cup \alpha_4^n$, with $\alpha_1^n \cup \alpha_2^n \subset L_{12}$ and $\alpha_3^n \cup \alpha_4^n \subset L_{34}$.

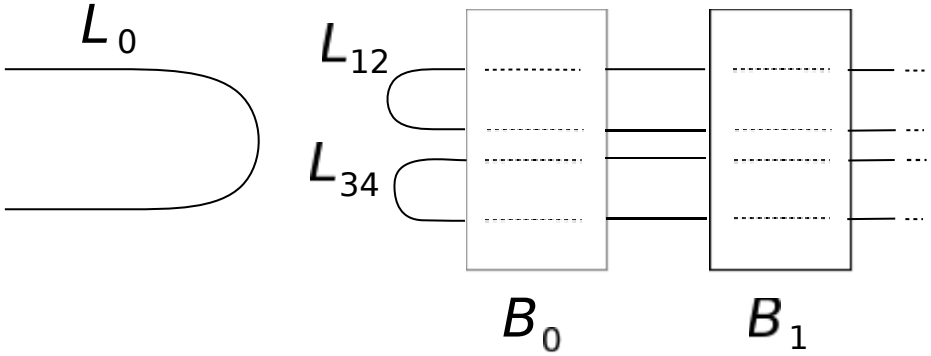

Figure 1: General configuration of $\Sigma_{\mathcal{O}_0}$

Furthermore, we will assume that in each box, the c_i^n's and the α_j^n satisfy the following properties:

i. each c_i^n is unknotted;

ii. $c_1^n \cup c_2^n$, $c_2^n \cup c_3^n$, $c_3^n \cup c_4^n$, and $c_4^n \cup c_1^n$ are Hopf links;

iii. $c_1^n \cup c_3^n$ and $c_2^n \cup c_4^n$ are unlinks;

iv. for each $(i, j) \in \{1, 2, 3, 4\}^2$, $c_i \cup \alpha_j$ is trivial if $i = j$, and a Hopf tangle otherwise.

It is straightforward to see that such configurations exist, though they are far from being unique. Throughout the text, we assume that a choice has been made once and for all. Moreover, the choice is the same for all values of n, since we want the double manifold cover of $\mathcal{O}_0$ to belong to the class $\mathcal{C}$.

What matters is not the precise nature of the content of the boxes, but rather the values of the linking numbers of the various components of $\Sigma_{\mathcal{O}_0}$; those are summarized by the graph depicted on Figure 2, with the convention

that the linking number between two components is zero if there is no edge drawn between them, and one otherwise.

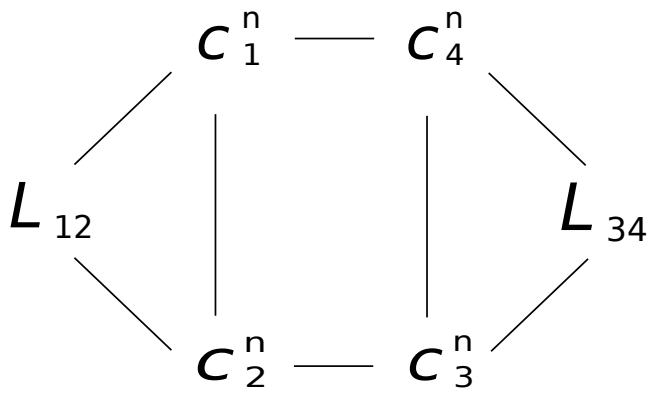

Figure 2: Linking numbers of components of $\Sigma_{\mathcal{O}_0}$

Finally, we assume that $\mathcal{O}_0$ is a so-called π-orbifold, i.e. each nontrivial local group is cyclic of order 2.

Lemma 2.1. *$\mathcal{O}$ is irreducible.*

Proof. Let $S \subset \mathcal{O}$ be a 2-suborbifold of positive Euler characteristic. Then $|S|$ is a 2-sphere intersecting $\Sigma_{\mathcal{O}_0}$ transversally. For homological reasons, the number of singular points of S is even. Thus S is either a nonsingular 2-sphere or a football. Furthermore, by Alexander's Theorem, $|S|$ bounds a 3-ball $B \subset \mathbf{R}^3$.

Suppose that S is nonsingular. If B contains a singular point, then it contains some compact component c_i^n of $\Sigma_{\mathcal{O}_0}$. Since c_i^n is unknotted, it bounds a disk $D \subset \operatorname{Int} B$. Either L_{12} or L_{34} has linking number one with c_i^n. Thus for L equal to L_{12} or L_{34} we have $D \cap L \neq \emptyset$, hence $B \cap L \neq \emptyset$. Since L is noncompact, this contradicts the assumption that S is nonsingular. Therefore, B is nonsingular.

Suppose now that S has two singular points. Those two points must belong to either L_{12} or L_{34}. By symmetry we may assume it is L_{12}. Then $B \cap L_{12}$ is an unknotted arc. We need to show that $B \cap \Sigma_{\mathcal{O}_0}$ is in fact equal to this arc. Arguing by contradiction, assume that some $c_{i_0}^n$ is contained in B. Arguing as above using linking numbers, we can show that for every i, c_i^n is contained in $\operatorname{Int} B$. Thus for the same reason L_{34} intersects B, leading to a contradiction. $\square$

2.2 The pillows P_n and their first properties

Let us define the sequence of pillows (P_n) and the compact subset K' which traps them. As shown on Figure 3 each P_n meets L_{12} and L_{34} both twice; the 3-ball bounded by $|P_n|$ contains a given box B_m if and only if $m \leq n$; finally, K' is a 3-ball meeting each of L_0, L_{12}, and L_{34} in an unknotted arc, and for every n the intersection of K' with P_n is a nonsingular disk.

For future reference, we let Π denote the properly embedded plane shown on Figure 3 and H_0, H_1 the closed half-spaces bounded by Π, so that $L_0 \subset H_0$ and H_1 contains all other components of $\Sigma_{\mathcal{O}_0}$.

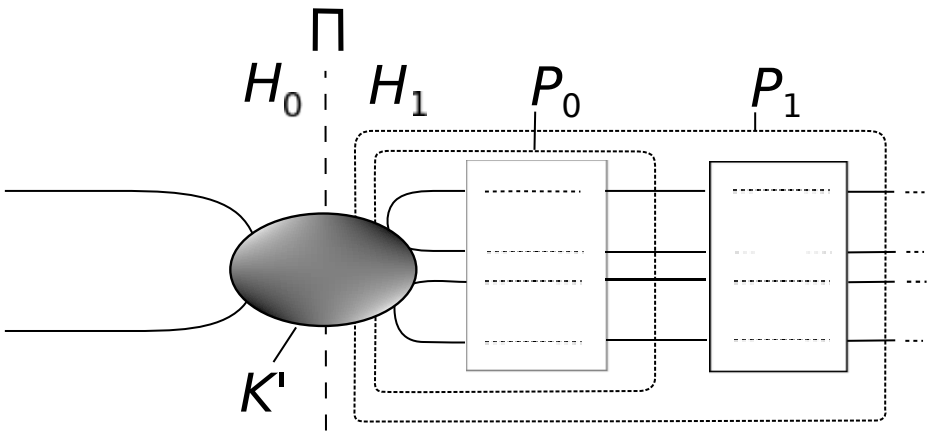

Figure 3: The canonical pillows P_n, the compact set K', and the plane Π

For future reference, for each n we let U_n denote the 3-ball bounded by $|P_n|$ and set $X_n := |\mathcal{O}_0| \setminus \operatorname{Int} B_n$. Thus X_n is noncompact and $\partial X_n = P_n$.

We collect in the next proposition some facts about the P_n's which are fairly easy to prove.

Lemma 2.2. *i. Each P_n is incompressible.*

ii. The P_n's are pairwise nonisotopic.

iii. The P_n's are trapped by K'.

Proof. Proof of assertion (i): If some P_n were compressible, then P_n would bound a solid pillow or be contained in a discal 3-suborbifold. Now U_n contains at least four closed components of $\Sigma_{\mathcal{O}_0}$, so this is impossible.

Assertion (ii) follows immediately from the fact that for $n \neq m$, the number of closed components of $\Sigma_{\mathcal{O}_0}$ contained in U_n and U_m are different.

Proof of assertion (iii): let n be a natural number. Seeking a contradiction, we assume there is a pillow P'_n isotopic to P_n such that $P'_n \cap K' = \emptyset$. By Alexander's Theorem, the 2-sphere $|P'_n|$ bounds a 3-ball U'_n in $\mathbf{R}^3$. There are two cases:

Case 1 K' is contained in U'_n. Then $|P'_n|$ is homologous to $\partial K'$ in $\mathbf{R}^3 \setminus \operatorname{Int} K'$. In this case, P'_n must hit L_0, which contradicts our assumption that P'_n is isotopic to P_n.

Case 2 U'_n is disjoint from K'. Let L_1, L_2 (resp. L_3, L_4) be the connected components of $\operatorname{Int} K' \cap L_{12}$ (resp. $\operatorname{Int} K' \cap L_{34}$.) Again by homological reasons, and using the fact that P'_n is isotopic to P_n, among the four singular points of P'_n, two must lie on some L_i with $1 \leq i \leq 2$, and the other two on some L_j with $3 \leq j \leq 4$. Now $\operatorname{Int} U'_n$ contains all c_i^n for $1 \leq i \leq 4$. As we have already seen several times, this leads to a contradiction. $\square$

Remark 2.3. The argument used to prove Lemma 2.1 shows that every X_n is irreducible.

2.3 The P_n's are canonical

If V is a solid torus and V' a solid torus contained in V, then the *geometric winding number* of the pair (V, V'), denoted by $\operatorname{gw}(V, V')$, is the smallest natural number n such that there is a meridian disk D of V with the property that $D \cap V'$ has n connected components. A fundamental fact, due to Schubert, is the multiplicativity of gw:

Lemma 2.4 (Schubert [Sch53])**.** *Let V, V', V'' be solid tori such that $V \subset V' \subset V''$. Then*

$$\operatorname{gw}(V'', V) = \operatorname{gw}(V'', V') \cdot \operatorname{gw}(V', V).$$

If V is a solid torus and c is an embedded circle in V, then the geometric winding number of the pair (V, V') where V' is a tubular neighbourhood of c does not depend on the choice of V'. We shall denote this number by $\operatorname{gw}(V, c)$

Let c, c' be two disjoint unknots in $\mathbf{R}^3$. Choose two solid tori V, V' such that $V \cap V' = \emptyset$ and V (resp. V') is a tubular neighborhood of c (resp. c'.) Viewing $\mathbf{R}^3$ as S^3 minus a point ∞, the complement of $\operatorname{Int} V$ in S^3 is also a solid torus, which we denote by V_1. By hypothesis, we have $V' \subset V_1$. We shall denote by $\operatorname{gw}(c^*, c')$ the geometric winding number of the pair (V_1, V). Again, this does not depend on the various choices. If c is an unknot in $\mathbf{R}^3$ and V is a solid torus contained in $\mathbf{R}^3 \setminus c$, then $\operatorname{gw}(c^*, V)$ is defined similarly.

Note that if $c \cup c'$ is an unlink (resp. a Hopf link), then $\mathrm{gw}(c^*, c')$ equals zero (resp. one). Hence all geometric winding numbers involving compact components of $\Sigma_{\mathcal{O}_0}$ are determined by our construction.

By extension, we can define $\mathrm{gw}(L^*, c)$ when L is an unknotted properly embeded line in $\mathbf{R}^3$ and c is an embedded circle in $\mathbf{R}^3$ that misses L : in the one-point compactification $S^3 = \mathbf{R}^3 \cup \{\infty\}$, L compactifies to a circle $L \cup \{\infty\}$. Let V be the complement of an open tubular neighborhood of this circle such that $c \subset V$. Then we set $\mathrm{gw}(L^*, c) := \mathrm{gw}(V, c)$. Again, all such numbers involving components of $\Sigma_{\mathcal{O}_0}$ are determined by the construction, and are equal to either zero or one. Likewise, if V' is a solid torus which misses L, then $\mathrm{gw}(L^*, V')$ is defined as $\mathrm{gw}(V, V')$ for a suitable choice of V.

Lemma 2.5. *Let V be a solid torus in $|\mathcal{O}_0|$ such that no point of ∂V is singular. Then* $\operatorname{Int} V$ *contains at most one component of $\Sigma_{\mathcal{O}_0}$. If it does, then this component is compact and homotopic to the soul of V.*

Proof. Assume that $\operatorname{Int} V$ contains some component of $\Sigma_{\mathcal{O}_0}$. Then this component is compact. Up to changing the notation, we may assume it is c_1^n for some n. For brevity, we drop the superscript n in the sequel.

Observe that $c_1 \subset V \subset S^3 \setminus L_{12}$. Hence by Lemma 2.4, we have $\mathrm{gw}(L_{12}^*, c_1) = \mathrm{gw}(L_{12}^*, V) \cdot \mathrm{gw}(V, c_1)$. Since $\mathrm{gw}(L_{12}^*, c_1) = 1$, we deduce $\mathrm{gw}(L_{12}^*, V) = \mathrm{gw}(V, c_1) = 1$. We also have $c_1 \subset V \subset S^3 \setminus L_{34}$. Since $\mathrm{gw}(L_{34}^*, c_1) = 0$ and $\mathrm{gw}(V, c_1) = 1$, Lemma 2.4 implies that $\mathrm{gw}(L_{34}^*, V) = 0$.

Seeking a contradiction, assume that $c_3 \subset V$. Then using the chain of inclusions $c_3 \subset V \subset S^3 \setminus L_{34}$ and the facts that $\mathrm{gw}(L_{34}^*, c_3) = 1$ and $\mathrm{gw}(L_{34}^*, V) = 0$ we get a contradiction. Hence $V \subset S^3 \setminus c_3$. Using the chain $c_1 \subset V \subset S^3 \setminus c_3$ we obtain $\mathrm{gw}(c_3^*, V) = 0$. The same argument applies, *mutatis mutandis*, to c_4.

Again we prove by contradiction that $c_2 \not\subset V$: otherwise using the chain $c_2 \subset V \subset S^3 \setminus c_3$ and the fact that $\mathrm{gw}(c_3^*, c_2) = 1$, Lemma 2.4 would lead to a contradiction.

By similar arguments, we exclude c_3^m and c_4^m for $m \neq n$ (using L_{34}), then c_2^m (using c_3^m), and finally c_1^m (using c_4^m.) □

Lemma 2.6. *For each $n \in \mathbf{N}$, X_n does not contain any essential, properly embedded annular 2-suborbifold.*

Proof. Arguing by contradiction, we let A be such an annular 2-suborbifold. Thus A is either a nonsingular annulus or a disk with two singular points.

Case 1 Suppose that A is an annulus. An innermost disk argument shows that after an isotopy we may assume that $A \cap \Pi = \emptyset$. Then ∂A is a union

of two circles, which viewed on P_n are parallel and have two singular points on each side. Let Y be the manifold obtained from $|H_1 \cap X_n|$ by removing small open tubular neighborhoods of L_{12} and L_{34}. Then Y has a manifold compactification diffeomorphic to a product $F \times [0,1]$, where F is a sphere with four holes, and $F \times \{0\}$ is the image of a subset of P_n. Such a manifold does not contain any essential annulus with both boundary components in $F \times \{0\}$.

Since A is incompressible in Y, we deduce that it is boundary-parallel in Y. Let V be a parallelism region in Y between A and some annulus A' in P_n. Let us show that no component of $\Sigma_{\mathcal{O}_0}$ lies in V. By Lemma 2.5, V contains at most one such component, say c_1^m for some $m > n$. For simplicity of notation, set $c_i := c_i^m$. Let γ be a core of A'. Then we apply Lemma 2.4 to the chain $\gamma \subset V \subset S^3 \setminus c_2$: from $\mathrm{gw}(V, \gamma) = 1$ and $\mathrm{gw}(c_2^*, \gamma) = 0$ we deduce $\mathrm{gw}(c_2^*, V) = 0$. Then Lemma 2.4 applied to $c_1 \subset V \subset S^3 \setminus c_2$ yields a contradiction. This finishes the proof of Lemma 2.6 in Case 1.

Case 2 Suppose that A is a disk with two singular points. Again, we may assume that A misses Π, and therefore lies in H_1. The intersection of X_n with $L_{12} \cup L_{34}$ consists of four properly embedded half-lines, which we denote by L_1, L_2, L_3, L_4 in such a way that for each $m > n$ and each $1 \leq i \leq 4$, α_i^m is contained in L_i.

By hypothesis, there exist two different indices i_0, j_0 in $\{1, 2, 3, 4\}$ such that A meets L_i if and only if $i \in \{i_0, j_0\}$. Let k_0, l_0 be the two remaining indices. Let Y be the π-orbifold whose underlying space is obtained from $|H_1 \cap X_n|$ by removing small open tubular neighborhoods of L_{k_0} and L_{l_0}, and whose singular locus consists of $L_{i_0} \cup L_{j_0}$. Then Y compactifies as $F \times [0,1]$, with F an annulus (two-holed sphere) with two singular points, $F \times \{0\}$ corresponding to a subset of P_n.

As before, we deduce that A is parallel in Y to some disk $D \subset P_n$ with two singular points, which necessarily belong, one to L_{i_0} and the other to L_{j_0}. Let B be the product region between A and D, this time viewed as a suborbifold of $\mathcal{O}_0$. Observe that B is a 3-ball whose singular locus contains a trivial 2-tangle consisting of the union of a subarc of L_{i_0} and a subarc of L_{j_0}. Since A is essential in X_n, $\operatorname{Int} B$ must in addition contain c_i^m for some $1 \leq i \leq 4$ and $m > n$.

Arguing as in the proof of the irreducibility of $\mathcal{O}$, we see that $\operatorname{Int} B$ contains c_i^m for i; in particular it contains $c_{k_0}^m$. We deduce that $c_{k_0}^m$, being an unknot in the ball $|B|$, bounds a disk $D' \subset |B|$. Such a disk must meet either L_{k_0} or L_{l_0}. This contradiction completes the proof of Case 2. $\square$

At last we can prove the main result of this subsection:

Proposition 2.7. *Every P_n is canonical.*

Proof. Assume that P_n is not canonical. Let P'_n be an incompressible toric 2-suborbifold of $\mathcal{O}_0$ which cannot be isotoped off P_n. Since $\mathcal{O}$ does not contain any turnover, P'_n is a nonsingular torus or a pillow. Assume that P'_n has been isotoped so as to intersect P_n transversally and minimally.

Since both P_n and P'_n are incompressible, a component of $P_n \cap P'_n$ is essential on P_n if and only if it is essential on P'_n. Using the irreducibility of $\mathcal{O}_0$ and a standard argument, one can remove any inessential intersection component between P_n and P'_n. Hence, by our assumption of minimality, each component of $P_n \cap P'_n$ is essential. As a consequence, some connected component A of $X_n \cap P'_n$ is an annular 2-suborbifold, which is essential as a suborbifold of X_n. This contradicts Lemma 2.6. □

3 The manifold M_0

In this section, we let $p : M_0 \to \mathcal{O}_0$ be the only two-fold manifold cover of $\mathcal{O}_0$. In other words, M_0 is the two-fold branched cover over $\mathbf{R}^3$ with branching locus $\Sigma_{\mathcal{O}_0}$ and p is the canonical projection. As in the compact case, this cover can be constructed by splitting $\mathcal{O}_0$ along a Seifert surface for $\Sigma_{\mathcal{O}_0}$, taking two copies of the resulting manifold, and gluing them appropriately. Alternatively, the orbifold fundamental group $\pi_1\mathcal{O}_0$ is (infinitely) generated by *meridians*, i.e. small circles around each component of $\Sigma_{\mathcal{O}_0}$. All meridians have order 2. There is an index 2 normal subgroup Γ of $\pi_1\mathcal{O}_0$ which is the kernel of a homomorphism from $\pi_1\mathcal{O}_0$ to $\mathbf{Z}/2\mathbf{Z}$ sending all meridians to the nontrivial element. This group is torsion free, and $p : M_0 \to \mathcal{O}_0$ is the corresponding manifold cover. We denote by $\tau : M_0 \to M_0$ the involution such that $\mathcal{O}_0 = M_0/\tau$.

By construction, $\mathcal{O}_0$ is obtained by gluing K' and countably many copies of some compact 3-orbifold Y' with two boundary components, glued to each other 'in the same way'. Moreover, the preimage of K' by p is connected and has connected boundary, and the preimage of each copy of Y' is connected and has exactly two boundary components. It follows that M_0 belongs to the class $\mathcal{C}$ defined in the introduction.

For each $n \geq 0$, set $T_n := p^{-1}(P_n)$ and $Y_n := p^{-1}(X_n)$. Thus each T_n is an embedded 2-torus in M. Set $K := p^{-1}(K')$. Then K is a compact subset of M. We need to prove that M has all the properties stated in Theorem 1.1.

Since $\mathcal{O}_0$ is irreducible, M_0 is irreducible ([BMP03, Theorem 3.23].) For the same reason, Remark 2.3 implies that Y_n is irreducible for every n. By the equivariant Dehn Lemma, incompressibility of every T_n follows from Lemma 2.2(i).

Lemma 3.1. *The T_n's are pairwise nonisotopic.*

Proof. Assume that there exist n, m with $n \neq m$ such that T_m is isotopic to T_n. By [BZ89, Prop 4.5], there is a τ-equivariant isotopy. Hence P_m is isotopic to P_n, contradicting Lemma 2.2(ii). □

Our next goal is to show that every T_n is canonical. For this we need a lemma.

Lemma 3.2. *There is no properly embedded essential annulus in Y_n.*

Proof. Put a τ-invariant riemannian metric on Y_n with mean-convex boundary. Arguing by contradiction, we assume that Y_n contains a properly embedded essential annulus. Let A have least area among such annuli. Set $A' := \tau(A)$. If $A \cap A' = \emptyset$ or $A = A'$, then $p(A)$ is an annular 2-suborbifold in X_n. Thus by Lemma 2.6, we deduce that $p(A)$ is inessential. This implies that A is inessential, contradicting our hypothesis.

Hence by the Meeks-Yau trick we may assume that A and A' intersect transversally in a nonempty disjoint union of curves and arcs. Since both A and A' are essential, a curve or arc is essential on A if and only if it is esssential on A'.

If there exists an inessential curve in $A \cap A'$, we let D be a disk of minimal area on A or A' bounded by such a curve. Note that D is automatically innermost. Thus a classical exchange/roundoff argument leads to a contradiction (the disk exchange can be realized by an isotopy because Y_n is irreducible.)

If there is an inessential arc in $A \cap A'$, we can argue similarly using a disk of minimal area cobounded by such an arc and an arc in ∂Y_n. In order to ensure that the disk exchange can be realized by an isotopy, we use the irreducibility of Y_n and the incompressibility of ∂Y_n.

Suppose there is an essential curve in $A \cap A'$. Let γ be such a curve. Pick a basepoint on γ and consider the covering space Y_γ of M whose fundamental group is the infinite cyclic group generated by γ. Let $\tilde{A}$ and $\tilde{A}'$ be lifts to Y_γ of A and A' respectively. Observe that the inclusions of $\tilde{A}$ and $\tilde{A}'$ in Y_γ are homotopy equivalences. In particular, $\tilde{A}$ and $\tilde{A}'$ are incompressible.

Sublemma 3.3. *i. The two boundary components of $\tilde{A}$ lie on distinct components of ∂Y_γ.*

ii. The same property holds for $\tilde{A}'$.

Proof. It suffices to prove the first point. We argue by contradiction, letting F be a component of ∂Y_γ containing all of $\partial \tilde{A}$. Observe that F is an open annulus whose inclusion in Y_γ is a homotopy equivalence. Hence there is an

annulus A'' contained in F and such that $\partial A'' = \partial \tilde{A}$. Thus $T := \tilde{A} \cup A''$ is an embedded torus. Since $\pi_1(Y_\gamma)$ is cyclic, T is compressible. As T contains an incompressible annulus, it does not lie in a 3-ball. Therefore, T bounds a solid torus V, which is a parallelism region between $\tilde{A}$ and A''. In particular, $\tilde{A}$ is isotopic to A'' relative to the boundary. Projecting such an isotopy to Y_n leads to a contradiction with the fact that A is essential. This completes the proof of Sublemma 3.3. □

Note that in the previous discussion, γ was an arbitrary essential curve of intersection between A and A'. Now we make a more specific choice of γ: we assume that some annulus cobounded by γ and some boundary component of A or A' has least possible area. Without loss of generality, we assume that such an annulus, called A_1, is contained in A. We let A_2 be the subannulus of A whose boundary is the union of γ and the other component of ∂A, and A_3, A_4 be the annuli such that $A_3 \cap A_4 = \gamma$ and $A_3 \cup A_4 = A'$.

We set $A_5 := A_1 \cup A_3$ and $A_6 := A_1 \cup A_4$. Then A_5 and A_6 are properly embedded annuli in X_n. As before we consider lifts $\tilde{A}_5$ and $\tilde{A}_6$ of those annuli to Y_γ. By the second assertion of Sublemma 3.3, at least one of $\tilde{A}_5$ and $\tilde{A}_6$ has its two boundary components on different components of ∂Y_γ. Assume $\tilde{A}_5$ has this property. Then A_5 is essential: otherwise one could lift a boundary-parallelism region for A_5 to M_γ and obtain one for $\tilde{A}_5$. Now by choice of A_1, the area of A_5 is less than or equal to that of A, and by rounding the corner, we obtain an essential annulus which contradicts the minimizing property of A.

Thus we are left with the case where $A \cap A'$ contains an essential arc.

Sublemma 3.4. *There are at least two distinct essential arcs in $A \cap A'$.*

Proof. Let γ_1, γ_2 denote the boundary components of A and γ_3, γ_4 denote those of A'. Thus γ_1 (resp. γ_3) is isotopic to γ_2 (resp. γ_4) on T_n. If $A \cap A'$ consists of only one essential arc α, then there are only two points in $\partial A \cap \partial A'$. If γ is not isotopic to γ_3, then $\gamma_1 \cap \gamma_3$ is nonempty, and so are $\gamma_1 \cap \gamma_4$, $\gamma_2 \cap \gamma_3$, and $\gamma_2 \cap \gamma_4$, resulting in a contradiction.

Hence the γ_i's are all pairwise isotopic, and the two intersection points belong to the same two arcs, which means that α is inessential, again a contradiction. □

Choose as basepoint an endpoint of some arc in $A \cap A'$ and let Y_T be the covering space of Y_n such that $\pi_1(Y_T) = \pi_1(T_n)$. Let U_n be a torus component of ∂Y_T whose projection is T_n, the said projection being a homeomorphism. Let $\tilde{A}$ and $\tilde{A}'$ be lifts to Y_T of A and A' respectively, which both meet U_n.

Sublemma 3.5. *i. The two components of $\partial\tilde{A}$ lie on distinct components of ∂Y_T.*

ii. The same holds for $\tilde{A}'$.

Proof. Again we only have to prove the first statement. Arguing by contradiction, assume both components of $\partial\tilde{A}$ belong to the same component of ∂Y_T. By construction, this component is U_n. Then there is an annulus $A'' \subset U_n$ such that $\partial A'' = \partial\tilde{A}$. Set $T = A'' \cup \tilde{A}$. Then T is an embedded torus in Y_T. By pushing T slightly we get $T' \subset \operatorname{Int} Y_T$.

Suppose that T (or equivalently T') is compressible. Since A'' is not contained in any 3-ball, neither is T, so T bounds a solid torus V. Since the core of A'' is a primitive element of U_n, V is a parallelism region between A'' and $\tilde{A}$. This shows that $\tilde{A}$ is inessential, and so is A, a contradiction.

Hence T is incompressible. Note that $H_2(Y_T)$ is isomorphic to $\mathbf{Z}$ and generated by the class of U_n. Thus T is either null-homologous or homologous to U_n.

If T is null-homologous, then T bounds some compact submanifold V. Since T is incompressible in Y_T, it is also incompressible in V, and by van Kampen's theorem, the induced homomorphisms $\pi_1 T \to \pi_1 V \to \pi_1 Y_T$ are both injective. It follows that $\pi_1 V$ is isomorphic to $\mathbf{Z}^2$, which is impossible with ∂V connected.

Thus T is homologous to U_n, and so is T'. Let X be a compact submanifold whose boundary is $U_n \cup T'$. Arguing as before, we see that $\pi_1 X$ is isomorphic to $\mathbf{Z}^2$. Since X is irreducible, X is homeomorphic to $T^2 \times I$. Again this implies that $\tilde{A}$ is boundary-parallel. □

We can now finish the proof of Lemma 3.2. Since Y_T covers a noncompact manifold, it is itself noncompact. In particular, Y_T is not homeomorphic to $T^2 \times I$. Thus, homology considerations as above show that U_n is the only torus in ∂Y_T. It follows that the boundary components γ, γ' of $\tilde{A}$ and $\tilde{A}'$ that do not lie on U_n are contained in some annulus component A'' of ∂Y_T, and are freely homotopic (and noncontractible) there. Hence there is a bigon between γ and γ', and we can use an exchange/roundoff argument to get a contradiction. This completes the proof of Lemma 3.2. □

The fact that the T_n's are canonical now follow as Proposition 2.7 followed from Lemma 2.6. Hence to prove Theorem 1.1, we only need to show the following statement:

Lemma 3.6. *The compact subset $K = p^{-1}(K') \subset M$ traps each T_n.*

Proof. Arguing by contradiction, we assume that for some n there exists an embedded torus $T' \subset M \setminus K$ which is isotopic to T_n. Our aim is to show that after isotopy, T' can be chosen to be invariant under τ. Then by [BZ89, Proposition 4.5] T' and T_n are equivariantly isotopic. This implies that the image of T' is an embedded pillow in $\mathcal{O} \setminus K'$ isotopic to P_n, which contradicts the fact that P_n is trapped by K'.

Let F be a parallel copy of ∂K lying outside K, and X be the (compact) product submanifold whose boundary is the disjoint union of ∂K and F. Thus $X \cap K = \partial K$. Without loss of generality we may assume that $T' \cap X = \emptyset$. We are going to use the Jaco-Rubinstein theory of PL minimal surfaces, as modified in [Mai03]. Choose a triangulation $\mathcal{T}$ of M which is in general position with respect to T' and invariant under τ. Let w_0 be the weight of T' with respect to $\mathcal{T}$. By repeatedly subdividing $\mathcal{T}$ on X, with may assume that any normal surface which meets both components of ∂X has weight strictly greater than w_0, keeping the invariance under τ. Then choose a τ-invariant regular Jaco-Rubinstein metric in the sense of [Mai03] so that the PL area is well-defined.

Let T'' be a normal torus of least PL area in the isotopy class of T'. We claim that T'' misses K. Indeed, K, being the double branched cover of a 3-ball with branching locus a trivial tangle, is a handlebody. The same is true for $K \cup X$. Since T'' is an incompressible torus, it cannot be contained in $K \subset X$. Hence if it met K, it would meet both boundary components of X, contradicting the fact that its weight is at most w_0.

Since the Jaco-Rubinstein metric we use is τ-invariant, $\tau T''$ also has least PL area in its isotopy class. Now T'' is isotopic to T_n, which is τ-invariant, so $\tau T''$ is isotopic to T''. By Jaco-Rubinstein's version [JR88] of a Theorem of Freedman-Hass-Scott, it follows that T'' and $\tau T''$ are disjoint or equal, i.e. T'' is invariant or equivariant. We still have to rule out the latter possibility.

Suppose that $T'' \cap \tau T'' = \emptyset$. Since T'' and $\tau T''$ are isotopic, they are parallel. Let Y be the compact submanifold bounded by $T'' \cup \tau T''$ and diffeomorphic to $T^2 \times I$. Note that Y is unique because M is noncompact. Hence Y is τ-invariant. By the classification of involutions of $T^2 \times I$, noting that τ exchanges the two boundary components, this implies that $\operatorname{Int} X$ contains an invariant embedded torus whose projection in $\mathcal{O}$ is a one-sided, nonorientable 2-suborbifold. Since $\mathcal{O}$ does not contain any such suborbifold, we have reached the desired contradiction. Hence the proof of Lemma 3.6 is complete. $\square$

References

[BMP03] Michel Boileau, Sylvain Maillot, and Joan Porti. *Three-dimensional orbifolds and their geometric structures*, volume 15 of *Panoramas et Synthèses*. Société Mathématique de France, Paris, 2003.

[BZ89] Michel Boileau and Bruno Zimmermann. The π-orbifold group of a link. *Math. Z.*, 200(2):187–208, 1989.

[Joh79] Klaus Johannson. *Homotopy equivalences of 3-manifolds with boundary*, volume 761 of *Lecture Notes in Mathematics*. Springer, Berlin, 1979.

[JR88] William Jaco and J. Hyam Rubinstein. PL minimal surfaces in 3-manifolds. *J. Differential Geom.*, 27(3):493–524, 1988.

[JS79] William H. Jaco and Peter B. Shalen. *Seifert fibered spaces in 3-manifolds*. Number 220 in Memoirs of the American Mathematical Society. American Mathematical Society, Providence, Rhode Island, USA, September 1979.

[Mai03] Sylvain Maillot. Open 3-manifolds whose fundamental groups have infinite center, and a torus theorem for 3-orbifolds. *Trans. Amer. Math. Soc.*, 355(11):4595–4638 (electronic), 2003.

[Mai08] Sylvain Maillot. Some open 3-manifolds and 3-orbifolds without locally finite canonical decompositions. *Algebr. Geom. Topol.*, 8(3):1795–1810, 2008.

[Mai12] Sylvain Maillot. An algorithmic classification of open surfaces. arXiv:1209.2818, September 2012.

[McM62] D. R. McMillan, Jr. Some contractible open 3-manifolds. *Trans. Amer. Math. Soc.*, 102:373–382, 1962.

[NS97] Walter D. Neumann and Gadde A. Swarup. Canonical decompositions of 3-manifolds. *Geom. Topol.*, 1:21–40 (electronic), 1997.

[Sch53] Horst Schubert. Knoten und Vollringe. *Acta Math.*, 90:131–286, 1953.

[Sco77] Peter Scott. Fundamental groups of non-compact 3-manifolds. *Proc. London Math. Soc. (3)*, 34(2):303–326, 1977.

[Whi35] J. H. C. Whitehead. A certain open manifold whose group is unity. *Quart. J. Math. Oxford*, 6:268–279, 1935.

Institut Montpelliérain Alexander Grothendieck
CNRS, Université de Montpellier
sylvain.maillot@umontpellier.fr