HAL
open science

Modulations diagnosis of asynchronous motors stator current in case of load torque oscillations

Baptiste Trajin

To cite this version:

Baptiste Trajin. Modulations diagnosis of asynchronous motors stator current in case of load torque oscillations. Prognostics and System Health Management Conference (PHM), May 2020, Besançon, France. pp.0. hal-02880899

HAL Id: hal-02880899

https://hal.science/hal-02880899v1

Submitted on 25 Jun 2020

HAL is a multi-disciplinary open access archive for the deposit and dissemination of scientific research documents, whether they are published or not. The documents may come from teaching and research institutions in France or abroad, or from public or private research centers.

L'archive ouverte pluridisciplinaire **HAL**, est destinée au dépôt et à la diffusion de documents scientifiques de niveau recherche, publiés ou non, émanant des établissements d'enseignement et de recherche français ou étrangers, des laboratoires publics ou privés.

Open Archive Toulouse Archive Ouverte

OATAO is an open access repository that collects the work of Toulouse researchers and makes it freely available over the web where possible

This is an author's version published in: http://oatao.univ-toulouse.fr/25992

To cite this version:

Trajin, Baptiste *Modulations diagnosis of asynchronous motors stator current in case of load torque oscillations.* (2020) In: Prognostics and System Health Management Conference (PHM), 4 May 2020 - 7 May 2020 (Besançon, France).

Any correspondence concerning this service should be sent to the repository administrator: tech-oatao@listes-diff.inp-toulouse.fr

Modulations Diagnosis of Asynchronous Motors Stator Current in case of Load Torque Oscillations

TRAJIN Baptiste
Laboratoire Génie de Production, LGP
Université de Toulouse, INP-ENIT
Tarbes, France
baptiste.trajin@enit.fr

***Abstract*—This paper proposes a novel method for the prediction of stator current modulations applied to the detection of load torque oscillations in asynchronous drives. In faulty cases, the stator current presents amplitude and phase modulation (AM - PM) leading to sideband frequency components in the current spectrum. The characteristics of these modulations depends on the electrical and mechanical parameters of the drive, on the fault frequency and on the operating point. The knowledge of these properties mean helpful information for the definition of a detection scheme. A full analytic approach is then proposed to predict the faulty stator current behavior. This theoretical analysis is based on the state space representation of the induction machine and allows expressing the frequency variation law of the sideband components for a given drive. Amplitude and phase modulation indexes are determined using proposed model that is validated with experimental results.**

***Keywords*-Stator current modulations, Diagnosis, Load torque oscillations, Asynchronous drive, State space model**

I. Introduction

Industrial electrical drives with induction motors are widely used because of their low cost and high robustness. In order to increase the productivity, reliability and safety of electromechanical asynchronous drives, monitoring techniques have been more and more investigated. Traditionally, mechanical drives can be monitored using vibration analysis, but measuring such quantities to detect mechanical faults is often expensive. To overcome this problem, available electrical quantities such as stator current may be used. A general review of monitoring and fault diagnosis schemes using stator current can be found in [1].

Detection and diagnosis techniques for mechanical faults, such as shaft misalignment, eccentricity, load unbalance, bearing or gearbox faults, focus on frequency combinations in the stator current spectrum [2] - [12]. The relevant frequencies are $f_s \pm f_d$, where f_s is the supply frequency and f_d the mechanical defect frequency. In this paper, the load torque oscillations applied on the induction machine are considered. This particular mechanical defect can be caused by the following: load unbalance, gearbox fault such as broken tooth, bearing faults. Many researches deal with the diagnosis of modulation on stator currents to identify the presence of load torque oscillations [5], [13] - [15].

This paper proposes a new approach to predict, through an analytic approach, the modulations of stator currents in case of load torque oscillations. Including both the electrical and mechanical part of the drive, the analytic model allows to study the fault signature evolution, helpful for the definition of a detection and diagnosis scheme. Section II presents the building of a complex signal, related to real three phase stator currents, suitable for the modulation diagnosis. Secondly, a complex vector, reflecting the modulation characteristics, is introduced. In Section III, a state space system expressed in the frequency domain, associated to the induction motor, is used to analytically determine stator current components due to load torque oscillations. Section IV applies the theoretical considerations presented in section II to the diagnosis of stator current modulations induced by load torque oscillations. The predominant modulations on stator current are identified and theoretical analysis are compared and validated with experimental results.

II. Diagnosis of stator current modulations

A. Construction of a suitable complex signal for modulations diagnosis

In order to diagnose modulations of a real stator current, it is necessary to associate with this signal a complex one. Traditionally, Hilbert transform is used [16] - [19]. However, in case of fast modulations, i.e. when the modulation frequency is higher than the carrier frequency, Hilbert transform is submissive to the Bedrosian theorem conditions. Consequently, it has been demonstrated in [13] that Hilbert transform leads to a wrong interpretation of modulation type and frequency. Thus, in case of three phases stator currents, Concordia transform (1) may be used to build a complex vector from two signals $x_1(t)$ and $x_2(t)$ with a phase shift of $-\frac{2\pi}{3}$ (2).

$$\begin{pmatrix} x_\alpha(t) \\ x_\beta(t) \end{pmatrix} = \begin{pmatrix} \sqrt{\frac{3}{2}} & 0 \\ \frac{1}{\sqrt{2}} & \frac{2}{\sqrt{2}} \end{pmatrix} \begin{pmatrix} x_1(t) \\ x_2(t) \end{pmatrix} \tag{1}$$

$$\begin{cases} x_1(t) = & X_{cc}(t)\cos(\Psi(t)) \\ x_2(t) = & X_{cc}(t)\cos(\Psi(t) - \frac{2\pi}{3}) \end{cases} \tag{2}$$

As $x_\alpha(t)$ and $x_\beta(t)$ are in quadrature, the Concordia transform allows to obtain a complex signal $z_{TC}(t)$ (3) where

$X_{cc}(t)$ and $\Psi(t)$ are respectively the instantaneous amplitude and phase [13], [14].

$$z_{TC}(t) = \sqrt{\frac{2}{3}}\left(x_\alpha(t) + jx_\beta(t)\right) = X_{cc}(t)e^{j\Psi(t)} \tag{3}$$

Then, the complex envelope i.e. the instantaneous amplitude $IA(t)$ (4), related to amplitude modulations, and the instantaneous frequency $IF(t)$ (5), related to phase modulations, may be extracted from $z_{TC}(t)$.

$$IA(t) = z_{TC}(t)e^{-j\Psi(t)} = X_{cc}(t) \simeq |z_{TC}(t)| \tag{4}$$

$$IF(t) = \frac{1}{2\pi}\frac{\mathrm{d}\Psi(t)}{\mathrm{d}t} \tag{5}$$

B. Modulations diagnosis

Consider a system of three real signals, representative of three phases stator currents (6).

$$\begin{aligned} i_k(t) = \quad & I_{123}\left[1 + \alpha\cos(2\pi f_d t + \phi_{am})\right] \\ & \times\cos\left(2\pi f_s t + \phi_k + \beta\sin(2\pi f_d t + \phi_{pm})\right) \end{aligned} \tag{6}$$

with:

- I_{123} the fundamental amplitude,
- α the amplitude modulation index,
- β the phase modulation index,
- f_d the modulation frequency,
- f_s the fundamental frequency,
- ϕ_{am} the amplitude modulation phase shift,
- ϕ_{pm} the phase modulation phase shift,
- $\phi_k = -(k-1)\frac{2\pi}{3}$, $k \in [1;3]$

The complex envelope and instantaneous frequency of the signals express respectively as (7) and (8).

$$IA(t) = I_{123}\left[1 + \alpha\cos(2\pi f_d t + \phi_{am})\right] \tag{7}$$

$$IF(t) = f_s + f_d\beta\cos(2\pi f_d t + \phi_{pm}) \tag{8}$$

A new complex vector $\tilde{G}$, depending on the instantaneous amplitude frequency components reflecting the modulations at f_d frequency is defined in (9). $\tilde{G}$ allows to diagnose the predominant modulation. Indeed, it is clear that the phase (resp. amplitude) modulation is predominant if the argument of $\tilde{G}$ is higher (resp. lower) than $\frac{\pi}{4}$, as shown in Fig. 1. Moreover, the modulus of $\tilde{G}$ indicates the power of the modulations.

$$\tilde{G} = k_{am} + jk_{pm} \tag{9}$$

with:

- $k_{am} = I_{123}\alpha$,
- $k_{pm} = f_d\beta$.

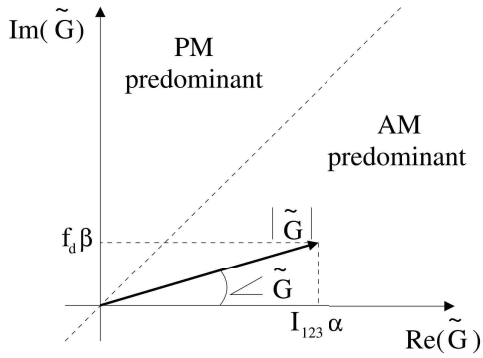

Fig. 1. Geometrical construction of vector $\tilde{G}$

III. Stator current harmonics characterization in case of load torque oscillations

In order to predict stator current components in case of load torque oscillations, a model of the drive has to be defined. This model has to be used to analytically determine stator current components resulting from load torque oscillations. Then, the proposed model considers load torque as an external input.

A. Asynchronous drive state space system

The state space representation of the induction machine depends on the allowed input measurements and the desired output variables. The supply voltage of the machine can be measured or calculated with the knowledge of the duty-cycle applied on the inverter. Consequently, the supply voltages are defined as the input variables. Stator currents are often already measured for control purposes. Moreover, in case of load torque oscillations, stator current analysis [5], [13], demonstrates the ability of these quantities to ensure the detection and diagnosis of faulty operations. The stator currents are then defined as output and state variables. Finally, to get electromechanical variables such as electromagnetic torque, the rotor flux has to be estimated [20]. Then, the rotor flux is defined as a state variable. Concordia transform (1) is used in the model [21], [22]. This transform is defined to obtain variables in a reference frame composed of two static components (relatively to the stator) in quadrature. Then, the classical first harmonic equations lead to the state space system defined in (10), where B is the input matrix, $A(t)$ the dynamic matrix, U the input vector and $X(t)$ the state vector.

$$\begin{aligned} \dot{X}(t) = & \underbrace{\begin{pmatrix} a_1 & 0 & a_2 & a_3\omega(t) \\ 0 & a_1 & -a_3\omega(t) & a_2 \\ a_4 & 0 & a_5 & -\omega(t) \\ 0 & a_4 & \omega(t) & a_5 \end{pmatrix}}_{A(t)} \underbrace{\begin{pmatrix} i_{s\alpha}(t) \\ i_{s\beta}(t) \\ \phi_{r\alpha}(t) \\ \phi_{r\beta}(t) \end{pmatrix}}_{X(t)} \\ & + \underbrace{\begin{pmatrix} \frac{1}{\sigma L_s} & 0 \\ 0 & \frac{1}{\sigma L_s} \\ 0 & 0 \\ 0 & 0 \end{pmatrix}}_{B} \underbrace{\begin{pmatrix} v_{s\alpha}(t) \\ v_{s\beta}(t) \end{pmatrix}}_{U(t)} \end{aligned} \tag{10}$$

with:

$$a_1 = -\left(\frac{1}{\sigma T_s} + \frac{1-\sigma}{\sigma T_r}\right), \quad a_2 = \frac{1-\sigma}{\sigma T_r M_{sr}},$$

$$a_3 = \frac{1-\sigma}{\sigma M_{sr}}, \quad a_4 = \frac{M_{sr}}{T_r}, \quad a_5 = -\frac{1}{T_r}$$

$$\omega(t) = n_p \Omega_{mech}(t)$$

where:

- L_s is the stator cyclic inductance,
- L_r is the rotor cyclic inductance,
- $T_s = \frac{L_s}{R_s}$ is the stator electrical time constant i.e. the stator cyclic inductance divided by the stator resistance,
- $T_r = \frac{L_r}{R_r}$ is the rotor electrical time constant i.e. the rotor cyclic inductance divided by the rotor resistance,
- M_{sr} is the mutual stator-rotor inductance,
- σ is the leakage coefficient,
- n_p is the number of pole pair of the machine,
- $\Omega_{mech}(t)$ is the mechanical rotating speed.

In this model, the electrical rotating speed $\omega(t)$ is defined as an internal variable of the model. This variable is obtained through the interaction between electromagnetic and load torques, using the mechanical system transfer function. On the one hand, the load torque $\Gamma_{load}(t)$ is considered as an input of the asynchronous drive model. On the other hand, the electromagnetic torque is expressed using state variables (11). As a simplification, the mechanical system is set as an inertia J_{asm} and viscous friction f_{asm}. The resulting mechanical differential equation is given in (12).

$$\Gamma_{em}(t) = n_p \frac{M_{sr}}{L_r}(\phi_{r\alpha}(t) i_{s\beta}(t) - \phi_{r\beta}(t) i_{s\alpha}(t)) \tag{11}$$

$$J_{asm}\frac{\mathrm{d}\Omega_{mech}(t)}{\mathrm{d}t} + f_{asm}\Omega_{mech}(t) = \Gamma_{em}(t) - \Gamma_{load}(t) \tag{12}$$

B. State space model in the frequency domain

For steady state operating points, in order to get a generic expression of frequency components of state variables in case of load torque oscillations, the state model of the asynchronous machine and mechanical equations are expressed in the frequency domain. This approach transforms products in the time domain, in convolution products ($*$) in the frequency domain. Thus, the state space system can be rewritten in the frequency domain (13), where ν is the frequency. Moreover, the mechanical differential equation can also be expressed (14).

$$(2\pi j\nu)X(\nu)A(\nu) * \underbrace{\begin{pmatrix} I_{s\alpha}(\nu) \\ I_{s\beta}(\nu) \\ \Phi_{r\alpha}(\nu) \\ \Phi_{r\beta}(\nu) \end{pmatrix}}_{X(\nu)} + B\begin{pmatrix} V_{s\alpha}(\nu) \\ V_{s\beta}(\nu) \end{pmatrix} \tag{13}$$

$$(2\pi j\nu J_{asm} + f_{asm})\Omega_{mech}(\nu) = \Gamma_{em}(\nu) - \Gamma_{load}(\nu) \tag{14}$$

C. Model of input and variables

In order to solve the state space system in the frequency domain, some hypothesis have to be set concerning input and state variables of the system. In steady state conditions, in the Concordia coordinate system, input voltages are supposed to be sinusoidal in quadrature (15), with $V_{\alpha\beta}$ the voltage amplitude and f_s the fundamental supply frequency.

$$\begin{cases} V_{s\alpha}(\nu) &= \dfrac{V_{\alpha\beta}}{2}\left[\delta(\nu - f_s) + \delta(\nu + f_s)\right] \\ V_{s\beta}(\nu) &= \dfrac{V_{\alpha\beta}}{2j}\left[\delta(\nu - f_s) - \delta(\nu + f_s)\right] \end{cases} \tag{15}$$

As an input, in faulty conditions, the load torque is considered as a constant Γ_0 plus an oscillation at f_{osc} frequency and Γ_{osc} amplitude (16).

$$\Gamma_{load}(\nu) = \Gamma_0\delta(\nu) + \frac{\Gamma_{osc}}{2}\left[\delta(\nu - f_{osc}) + \delta(\nu + f_{osc})\right] \tag{16}$$

It can be estimated that a frequency component at f_{osc} appears in electromagnetic torque due to the mechanical fault [10] (17). Note that $\bar{\Gamma}_d$ is the complex conjugate of Γ_d.

$$\Gamma_{em}(\nu) = \Gamma_{em,0}\delta(\nu) + \frac{1}{2}\left[\Gamma_d\delta(\nu - f_{osc}) + \bar{\Gamma}_d\delta(\nu + f_{osc})\right] \tag{17}$$

The mechanical rotating speed expresses itself as a constant Ω_0 plus an oscillation at f_{osc} frequency and Ω_{osc} amplitude, where Ω_{osc} is a complex parameter reflecting modulus and phase shift of the oscillation (18).

$$\Omega_{mech}(\nu) = \Omega_0\delta(\nu) + \frac{1}{2}\left[\Omega_{osc}\delta(\nu - f_{osc}) + \bar{\Omega}_{osc}\delta(\nu + f_{osc})\right] \tag{18}$$

As it is demonstrated in [5], [10], [11], in case of load torque oscillations at f_{osc} frequency, stator current components at $f_s \pm f_{osc}$ frequency appear. The same behavior can be supposed concerning rotor fluxes [11], [23]. Thus state variables are modelled as (19)-(22), where left and right components, at $f_s - f_{osc}$ and $f_s + f_{osc}$ frequencies respectively, are independent in terms of amplitude and phase shift.

$$\begin{aligned} I_{s\alpha}(\nu) = &\frac{I_{\alpha\beta}}{2}\left[e^{j\psi_i}\delta(\nu - f_s) + e^{-j\psi_i}\delta(\nu + f_s)\right] \\ &+ \frac{1}{2}\left[I^+ e^{j\psi_i}\delta(\nu - f_s - f_{osc}) + \bar{I}^+ e^{-j\psi_i}\delta(\nu + f_s + f_{osc})\right] \\ &+ \frac{1}{2}\left[I^- e^{j\psi_i}\delta(\nu - f_s + f_{osc}) + \bar{I}^- e^{-j\psi_i}\delta(\nu + f_s - f_{osc})\right] \end{aligned} \tag{19}$$

$$\begin{aligned} I_{s\beta}(\nu) = &\frac{I_{\alpha\beta}}{2j}\left[e^{j\psi_i}\delta(\nu - f_s) - e^{-j\psi_i}\delta(\nu + f_s)\right] \\ &+ \frac{1}{2j}\left[I^+ e^{j\psi_i}\delta(\nu - f_s - f_{osc}) - \bar{I}^+ e^{-j\psi_i}\delta(\nu + f_s + f_{osc})\right] \\ &+ \frac{1}{2j}\left[I^- e^{j\psi_i}\delta(\nu - f_s + f_{osc}) - \bar{I}^- e^{-j\psi_i}\delta(\nu + f_s - f_{osc})\right] \end{aligned} \tag{20}$$

$$\begin{aligned}\Phi_{r\alpha}(\nu)=&\frac{\Phi_{\alpha\beta}}{2}\left[e^{j\psi_\phi}\delta(\nu-f_s)+e^{-j\psi_\phi}\delta(\nu+f_s)\right]\\&+\frac{1}{2}\left[\Phi^+e^{j\psi_\phi}\delta(\nu-f_s-f_{osc})+\bar{\Phi}^+e^{-j\psi_\phi}\delta(\nu+f_s+f_{osc})\right]\\&+\frac{1}{2}\left[\Phi^-e^{j\psi_\phi}\delta(\nu-f_s+f_{osc})+\bar{\Phi}^-e^{-j\psi_\phi}\delta(\nu+f_s-f_{osc})\right]\end{aligned}\tag{21}$$

$$\begin{aligned}\Phi_{r\beta}(\nu)=&\frac{\Phi_{\alpha\beta}}{2j}\left[e^{j\psi_\phi}\delta(\nu-f_s)-e^{-j\psi_\phi}\delta(\nu+f_s)\right]\\&+\frac{1}{2j}\left[\Phi^+e^{j\psi_\phi}\delta(\nu-f_s-f_{osc})-\bar{\Phi}^+e^{-j\psi_\phi}\delta(\nu+f_s+f_{osc})\right]\\&+\frac{1}{2j}\left[\Phi^-e^{j\psi_\phi}\delta(\nu-f_s+f_{osc})-\bar{\Phi}^-e^{-j\psi_\phi}\delta(\nu+f_s-f_{osc})\right]\end{aligned}\tag{22}$$

where:

- $I_{\alpha\beta}=\sqrt{\frac{3}{2}}I_{123}$ is the amplitude of stator currents fundamental component in the Concordia reference frame,
- I_{123} is the amplitude of stator currents fundamental component in the three phase reference frame,
- ψ_i is the phase shift between supply voltages and stator currents,
- I^+ is the complex amplitude of right stator current frequency component (f_s+f_{osc}),
- I^- is the complex amplitude of left stator current frequency component (f_s-f_{osc}),
- $\Phi_{\alpha\beta}$ is the amplitude of rotor fluxes fundamental component in the Concordia reference frame,
- ψ_ϕ is the phase shift between supply voltages and rotor fluxes,
- Φ^+ is the complex amplitude of right rotor flux frequency component (f_s+f_{osc}),
- Φ^- is the complex amplitude of left rotor flux frequency component (f_s-f_{osc}).

Fundamental components characteristics $I_{\alpha\beta}$, $\Phi_{\alpha\beta}$, ψ_i and ψ_ϕ are determined using transfer functions derived from state space representation of the system.

D. Fault harmonics due to load torque oscillations

The expression of mechanical rotating speed oscillations is derived from (16), (17) and the mechanical transfer function (14). This directly leads to the variable Ω_{osc} (23). Finally, the mechanical speed $\Omega_{mech}(\nu)$ and $\omega(\nu)$ are derived.

$$\Omega_{osc}=\frac{\Gamma_d-\Gamma_{osc}}{2j\pi f_{osc}J_{mas}+f_{asm}}\tag{23}$$

On stator currents and rotor fluxes, it is necessary to determine sideband components at $f_s\pm f_{osc}$ frequencies. It can be noticed that components at frequencies $\pm f_s\pm 2f_{osc}$ are neglected in the convolution product between rotating speed and rotor fluxes.

Considering stator currents and rotor fluxes expressions, the electromagnetic torque component at f_{osc} frequency is calculated and identified with Γ_d (24).

$$\begin{aligned}\frac{1}{2}\Gamma_d=&\frac{n_pM_{sr}}{2jL_r}\left[\Phi_{\alpha\beta}\left(I^+e^{j(\psi_i-\psi_\psi)}-\bar{I}^-e^{j(\psi_\phi-\psi_i)}\right)\right.\\&\left.+I_{\alpha\beta}\left(\bar{\Phi}^-e^{j(\psi_i-\psi_\phi)}-\Phi^+e^{j(\psi_\phi-\psi_i)}\right)\right]\end{aligned}\tag{24}$$

Finally, stator current and rotor fluxes fault components are obtained (25).

$$\begin{cases}I^+=&-\dfrac{e^{j(\psi_\phi-\psi_i)}}{2}\dfrac{N_{I^+}}{D_+}\\I^-=&-\dfrac{e^{j(\psi_\phi-\psi_i)}}{2}\dfrac{N_{I^-}}{D_-}\end{cases}\tag{25}$$

with:

$$\begin{cases}N_{I^+}=n_p\Omega_{osc}\Phi_{\alpha\beta}[2\pi(f_s+f_{osc})a_3+j(a_2+a_5a_3)]\\N_{I^-}=n_p\bar{\Omega}_{osc}\Phi_{\alpha\beta}[2\pi(f_s-f_{osc})a_3+j(a_2+a_5a_3)]\\D_+=[2\pi(f_s+f_{osc})]^2-2\pi(f_s+f_{osc})\omega_0-a_1a_5+a_2a_4\\\quad+j(2\pi(a_1+a_5)(f_s+f_{osc})-\omega_0(a_4a_3+a_1)\\D_-=[2\pi(f_s-f_{osc})]^2-2\pi(f_s-f_{osc})\omega_0-a_1a_5+a_2a_4\\\quad+j(2\pi(a_1+a_5)(f_s-f_{osc})-\omega_0(a_4a_3+a_1)\end{cases}$$

It can be seen from (25) that mechanical transfer function takes place in the equations independently of electrical parameters and equations. Consequently, the mechanical part of the drive can be modelled apart from the motor and the resulting transfer function can be included in the expressions of I^+ and I^-.

IV. Stator current modulation diagnosis in case of load torque oscillations

A. Complex vector $\tilde{G}$ in case of load torque oscillations

Using stator current model in case of load torque oscillations in (19) and (20), the complex signal is directly expressed in the frequency domain by $Z_{TC}(\nu)=\sqrt{\frac{2}{3}}I_{s\alpha}(\nu)+jI_{s\beta}(\nu)$. Then, $z_{TC}(t)$ is derived using the inverse Fourier transform (26).

$$\begin{aligned}z_{TC}(t)=&\left[I_{123}+\sqrt{\tfrac{2}{3}}\left(I^+e^{j2\pi f_{osc}t}+I^-e^{-j2\pi f_{osc}t}\right)\right]\\&\times e^{j(2\pi f_st+\psi_i)}\end{aligned}\tag{26}$$

Finally, the instantaneous amplitude (27) and frequency (28) of stator currents are calculated using respectively the modulus and the argument of $z_{TC}(t)$ and first order Taylor expansions [13].

$$IA_{z_{TC}}(t)\simeq I_{123}+\sqrt{\frac{2}{3}}|I^++\bar{I}^-|\cos(2\pi f_{osc}t+\angle(I^++\bar{I}^-))\tag{27}$$

$$IF_{z_{TC}}(t)\simeq f_s+\frac{f_{osc}}{I_{123}}\sqrt{\frac{2}{3}}|I^+-\bar{I}^-|\cos(2\pi f_{osc}t+\angle(I^+-\bar{I}^-))\tag{28}$$

Thus, amplitude and phase modulation amplitudes are derived (29). Finally, the complex vector $\tilde{G}$ is obtained (9).

$$\begin{cases}\alpha=\dfrac{1}{I_{123}}\sqrt{\dfrac{2}{3}}|I^++\bar{I}^-|\\\beta=\dfrac{1}{I_{123}}\sqrt{\dfrac{2}{3}}|I^+-\bar{I}^-|\end{cases}\tag{29}$$

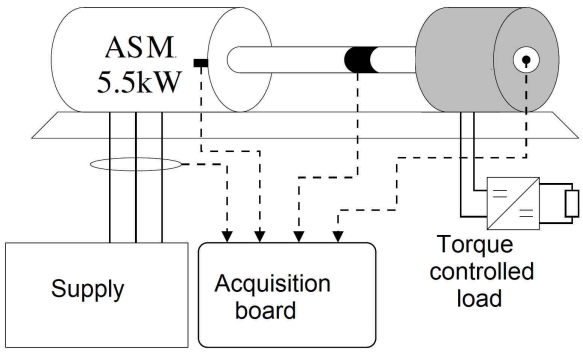

Fig. 2. Principle of experimental test bench

B. Experimental results

1) Experimental setup: Tests have been performed on an experimental setup with a three-phase *Leroy-Somer*, $400V$, $5.5kW$, 2 pole pairs $LS132S$ induction motor. The machine is supplied by a standard industrial PWM voltage inverter operating in open-loop condition with a constant voltage to frequency ratio. The load is composed of a DC motor with separate constant excitation. The armature coils of the DC machine are connected to a current controlled active load. Thus, using an appropriate current reference signal, a constant load torque with an additional oscillating component can be introduced. Mechanical load torque and stator currents of the induction machine are simultaneously acquired through a 24 bit data acquisition board at $6.4kHz$ sampling frequency. Signal processing is done off-line with Matlab. Experimental setup is described by Fig. 2.

2) Stator current analysis: Stator currents are measured in case of load torque oscillations. The supply frequency is set to $f_s = 50Hz$ and the average load torque is about $\Gamma_0 = 15N.m$. Load torque oscillations are induced at $f_{osc} = 5$, 20 and $120Hz$ with amplitudes of $\Gamma_{osc} = 0.4$, 2, 4 and $8N.m$. Six experimental measurements are achieved for each set of load torque amplitude and frequency, to ensure the reproducibility of results. Moreover, complex vector $\tilde{G}$, experimentally obtained is compared with the analytic one given in (9) and (29), using a mechanical model representative of the whole experimental setup. Results are depicted in Fig. 3.

It can be noticed in Fig. 3(a) that low frequency load torque oscillations at $f_{osc} = 5Hz$, mainly induce amplitude modulations of stator currents. On the contrary, in Fig. 3(b) and 3(c), in case of load torque oscillations at $f_{osc} = 20Hz$ and $f_{osc} = 120Hz$ frequencies, phase modulation is predominant on stator currents.

A good concordance can be established on Fig. 3, between theoretical and experimental complex vector $\tilde{G}$, in terms of modulus and argument. The knowledge of $\tilde{G}$ allows to decide, through its argument, if stator current modulations at a determined frequency are induced by a load torque oscillation. Moreover, it is clear that the modulus of $\tilde{G}$ is proportional to the load torque oscillation amplitude, thus reflecting the significance level of the defect.

V. Conclusion

In this paper, a new analytic approach for predicting the stator current modulations in case of load torque oscillations in asynchronous drives has been presented. For detection purposes, the sideband component signatures in the current spectrum are often exploited. To study these signatures, the state space model of the induction motor in the Concordia reference frame is used in the frequency domain.

In association with a model of the mechanical part of the drive, and knowing electrical and mechanical parameters of the setup, amplitude and phase shift of sideband stator current components induced by load torque oscillations are analytically determined. This approach allows the characterization of stator fault components for any induction drives and can be helpful to design a detection scheme. Moreover, when load torque oscillations occur, both amplitude and phase modulations appear on the stator current.

Then, for an accurate prediction of the faulty stator current behavior, the analytic approach is extended to the determination of the modulation index (PM and AM) of stator currents. A complex vector used for modulation diagnosis has been derived from the analytic expression of fault sideband stator current components. It depicts the significance level of modulations through its modulus and the predominant modulation through its argument. Finally, this model has been experimentally validated on an asynchronous drive, with a good concordance between analytic and experimental results.

Further works will deal with distinguishing effects of eccentricity and load torque torque oscillations. Indeed, eccentricity only induces AM on stator current and load torque oscillations induce AM and PM. An other way of research is to deeply study interactions between mechanical subsystem and characteristics of the asynchronous motor. As demonstrated, sideband components amplitude are linked to mechanical transfer function and electrical parameters of the drive. This lead to the consideration of possible resonant behavior that could lead to increase the detection accuracy of early mechanical defects.

References

[1] S. Nandi and H. A. Toliyat, *Condition monitoring and fault diagnosis of electrical machines - a review*, IEEE Transactions on Energy Conversion, vol. 20, no. 4, Dec. 2005, pp. 719-729.

[2] W. T. Thomson, *On-line current monitoring to detect electrical and mechanical faults in three-phase induction motor drives*, International Conference on Life Management og Power Plants, Dec. 1994, pp. 66-73.

[3] R. R. Obaid and T. G. Habetler, *Current-based algorithm for mechanical fault detection in induction motors with arbitrary load conditions*, Industry Applications Society Annual Meeting, Oct. 2003, pp. 1347-1351.

[4] D. G. Dorrell, W. T. Thomson and S. Roach, *Analysis of airgap flux, current, and vibration signals as a function of the combination of static and dynamic airgap eccentricity in 3-phase induction motors*, IEEE Transactions on Industry Applications, vol. 33, no. 1, Jan.-Feb. 1997, pp. 24-34.

[5] M. Blodt, J. Regnier and J. Faucher, *Distinguishing Load Torque Oscillations and Eccentricity Faults in Induction Motors Using Stator Current Wigner Distributions*, IEEE Transactions on Industry Applications, vol. 45, no. 6, Nov-Dec. 2009, pp. 1991-2000.

[6] R. R. Obaid, T. G. Habetler and J. R. Stack, *Stator current analysis for bearing damage detection in induction motors*, International Symposium on Diagnostics for Electric Machines, Power Electronics and Drives, Aug. 2003, pp. 182-187.

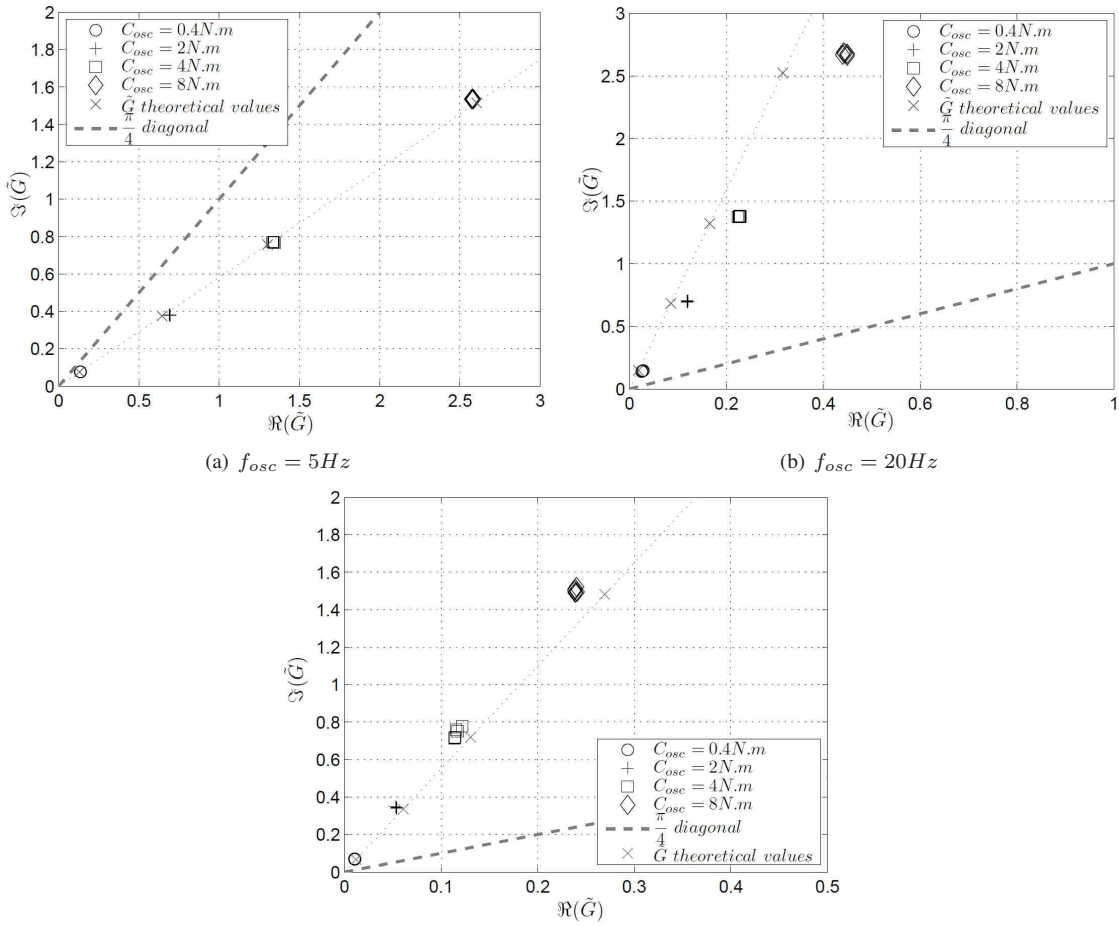

(a) $f_{osc} = 5Hz$

(b) $f_{osc} = 20Hz$

(c) $f_{osc} = 120Hz$

Fig. 3. Complex vector $\tilde{G}$ in case of load torque oscillations for several oscillation frequencies - Comparison between theoretical analysis and experimental results

[7] B. Akin, U. Orguner, H. A. Toliyat and M. Rayner, *Phase-Sensitive Detection of Motor Fault Signatures in the Presence of Noise*, IEEE Transactions on Industrial Electronics, vol. 55, no. 6, Jun. 2006, pp. 2539-2550.

[8] S. Nandi, S. Ahmed and H. A. Toliyat, *Detection of Rotor Slot and Other Eccentricity Related Harmonics in a Three Phase Induction Motor with Different Rotor Cages*, IEEE Transactions on Energy Conversion, vol. 16, no. 3, Sep. 2001, pp. 253-260.

[9] S. H. Kia, H. Henao, G. A. Capolino, *A Modeling Approach for Gearbox Monitoring Using Stator Current Signature in Induction Machines*, Industry Applications Society Annual Meeting, Oct. 2008, pp. 1-6.

[10] A. Bellini, F. Immovilli, R. Rubini and C. Tassoni, *Diagnosis of Bearing Faults of Induction Machines by Vibration or Current Signals: A Critical Comparison*, IEEE 2008 Industry Applications Society Annual Meeting, Oct. 2008, pp. 1-8.

[11] B. Trajin, J. Regnier, J. Faucher, *Comparison between stator current and estimated mechanical speed for the detection of bearing wear in asynchronous drives*, IEEE Transactions on Industrial Electronics, vol. 56, no. 11, Nov. 2009, pp. 4700-4709.

[12] S. H. Kia, H. Henao and G. A. Capolino, *Torsional Vibration Monitoring Using Induction Machine Electromagnetic Torque Estimation*, IEEE Industrial Electronics Society Conference, Nov. 2008, pp. 3120-3125.

[13] B. Trajin, M. Chabert, J. Regnier, J. Faucher, *Hilbert versus Concordia transform for three-phase machine stator current time-frequency monitoring*, Mechanical Systems and Signal Processing, vol. 23, no. 8, Nov. 2009, pp. 2648-2657.

[14] B. Trajin, M. Chabert, J. Regnier, J. Faucher, *Space vector analysis for the diagnosis of high frequency amplitude and phase modulations in induction motor stator current*, 5th International Conference on Condition Monitoring and Machinery Failure Prevention Technologies, Jul. 2008, pp. 1423-1431.

[15] M. Blodt, M. Chabert, J. Faucher and B. Dagues, *Mechanical load fault detection in induction motors by stator current timefrequency analysis*, IEEE International Electric Machines and Drives Conference, May 2005, pp. 1881-1888.

[16] B. Boashash, *Estimating and interpreting the instantaneous frequency of a signal - Part 1 : Fundamentals*, Proceedings of the IEEE, vol. 80, no. 4, Apr. 1992, pp. 520-538.

[17] B. Boashash, *Estimating and interpreting the instantaneous frequency of a signal - Part 2 : Algorithms and applications*, Proceedings of the IEEE, vol. 80, no. 4, Apr. 1992, pp. 540-568.

[18] B. Picinbono, *On instantaneous amplitude and phase signal*, IEEE Transactions on signal processing, vol. 45, no. 3, Mars 1997, pp. 552-560.

[19] P. Flandrin, *Time-frequency, time-scale analysis*, Academic press, San Diego, 1999.

[20] M. Cuibus, V. Bostan, S. Ambrosii, C. Ilas and R. Magureanu, *Luenberger, Kalman and Neural Network Observers for Sensorless Induction Motor Control*, 3rd International Power Electronics and Motion Control Conference, vol. 3, Aug. 2000, pp. 1256-1261.

[21] D. C. White, H. H. Woodson, *Electromechanical energy conversion*, Wiley, New-York, 1959.

[22] P. Vas, *Electrical Machines and Drives - A space-vector theory approach*, Oxford Science Publications, Oxford, 1992.

[23] B. Trajin, J. Regnier, J. Faucher, *Detection of Bearing Faults in Asynchronous Motors using Luenberger Speed Observer*, IEEE Industrial Electronics Society Conference, Nov. 2008, pp. 3073-3078.