HAL
open science

The missing (A, D, r) diagram

Alexandre Delyon, Antoine Henrot, Yannick Privat

To cite this version:

Alexandre Delyon, Antoine Henrot, Yannick Privat. The missing (A, D, r) diagram. Annales de l'Institut Fourier, In press, 10.48550/arXiv.2005.05749 . hal-02559553v2

HAL Id: hal-02559553

https://hal.science/hal-02559553v2

Submitted on 6 May 2021

HAL is a multi-disciplinary open access archive for the deposit and dissemination of scientific research documents, whether they are published or not. The documents may come from teaching and research institutions in France or abroad, or from public or private research centers.

L'archive ouverte pluridisciplinaire **HAL**, est destinée au dépôt et à la diffusion de documents scientifiques de niveau recherche, publiés ou non, émanant des établissements d'enseignement et de recherche français ou étrangers, des laboratoires publics ou privés.

The missing (A, D, r) diagram

Alexandre Delyon* Antoine Henrot† Yannick Privat‡

May 6, 2021

Abstract

In this paper we are interested in "optimal" universal geometric inequalities involving the area, diameter and inradius of convex bodies. The term "optimal" is to be understood in the following sense: we tackle the issue of minimizing/maximizing the Lebesgue measure of a convex body among all convex sets of given diameter and inradius. The minimization problem in the two-dimensional case has been solved in a previous work, by M. Hernandez-Cifre and G. Salinas. In this article, we provide a generalization to the n-dimensional case based on a different approach, as well as the complete solving of the maximization problem in the two-dimensional case. This allows us to completely determine the so-called 2-dimensional Blaschke-Santaló diagram for planar convex bodies with respect to the three magnitudes area, diameter and inradius in euclidean spaces, denoted (A, D, r). Such a diagram is used to determine the range of possible values of the area of convex sets depending on their diameter and inradius. Although this question of convex geometry appears quite elementary, it had not been answered until now. This is likely related to the fact that the diagram description uses unexpected particular convex sets, such as a kind of smoothed nonagon inscribed in an equilateral triangle.

Keywords: shape optimization, diameter, inradius, convex geometry, 2-cap bodies, Blaschke-Santaló diagram.

AMS classification: 49Q10, 52A40, 28A75, 49K15.

1 Introduction

Let $n \in \mathbb{N}^*$. In the whole article, we will denote by $\mathcal{K}_n$ the set of all convex bodies (i.e. compact convex sets with non-empty interior) in $\mathbb{R}^n$.

In convex geometry, the search for optimal inequalities between the six standard geometrical quantities which are the surface A (or volume V), the perimeter P, the diameter D, the inradius r, the circumradius R and the (minimal) width[1] w of any convex body, is a very old activity that dates back to the work of W. Blaschke ([2], [3]) and has been extensively studied by L. Santaló in [15]. For a list of such inequalities known in 2000, we refer to the classical review paper [17].The general idea is to consider three of the aforementioned quantities (q_1, q_2, q_3) and to determine a complete system of inequalities relating them, in other words a system of inequalities describing the set

$$\{(q_1(K), q_2(K), q_3(K)),\ K \in \mathcal{K}_n\}.$$

*Université de Lorraine, CNRS, Institut Elie Cartan de Lorraine, BP 70239 54506 Vandœuvre-lès-Nancy Cedex, France (alexandre.delyon@univ-lorraine.fr).

†Université de Lorraine, CNRS, Institut Elie Cartan de Lorraine, BP 70239 54506 Vandœuvre-lès-Nancy Cedex, France (antoine.henrot@univ-lorraine.fr).

‡IRMA, Université de Strasbourg, CNRS UMR 7501, Inria, 7 rue René Descartes, 67084 Strasbourg, France (yannick.privat@unistra.fr).

[1] In other words, the smallest distance between any two different parallel supporting hyperplanes of a convex body.

In general, it is convenient to summarize it into a diagram, usually called *Blaschke-Santaló diagram*. It represents the set of possible values of the triple that can be reached by a convex set (suitably normalized). Among the 20 possible choices of this three geometric quantities, L. Santaló completely solved in his work the 6 cases (A, P, w), (A, P, r), (A, P, R), (A, D, w), (P, D, w), (D, r, R) and gave a partial solution to (D, R, w) and (r, R, w). These two last cases were eventually solved by M. Hernandez Cifre and S. Segura Gomis in [13]. In a series of papers with collaborators, M. Hernandez Cifre has also been able to prove complete systems of inequalities in the cases

(A, D, R), (P, D, R) [11], in the cases (A, r, R), (P, r, R) [5] and finally in the case (D, r, w) [10].

In spite of all these efforts, several Blaschke-Santaló diagrams (or complete systems of inequalities) remain unknown. To the best of our knowledge, this is the case for the diagrams (A, P, D), (A, D, r), (A, r, w), (A, R, w), (P, D, r), (P, r, w) and (P, R, w). Let us mention that several interesting inequalities for (P, D, r) and (P, R, w) can be found in [12]. Let us also mention several works dedicated to Blaschke-Santaló diagrams involving four geometric quantities (see e.g. [6]).

In this paper, we focus on the case (A, D, r) and completely solve it in the two-dimensional case $(n = 2)$, and partially in the general case $n \geqslant 3$. More precisely in the case $n = 2$, we obtain universal inequalities involving the area of a plane convex set, its diameter and inradius, and we plot the corresponding Blaschke-Santaló diagram:

$$\mathcal{D} = \left\{ (x, y) \in \mathbb{R}^2,\ x = 2\frac{r(K)}{D(K)},\ y = \pi\frac{r^2(K)}{A(K)},\ K \in \mathcal{K}_2 \right\}.$$

To this aim, we will introduce two families of optimization problems for the area (or the volume in higher dimension) and then solve them. More precisely, we will tackle the issue of maximizing and minimizing the area with prescribed diameter and inradius. It turns out that the minimization problem has already been solved in the two dimensional case by M. Hernandez Cifre and G. Salinas [12]. The optimal set is known to be a two-cap body defined as the convex hull of a disk of radius r and illustrated on Fig. 1. with two points that are symmetric with respect to the center of the ball and at a distance D. This result has been extended in three dimensions in [18] but with an additional assumption. In this paper, we solve this minimization problem in full generality (see Theorem 1).

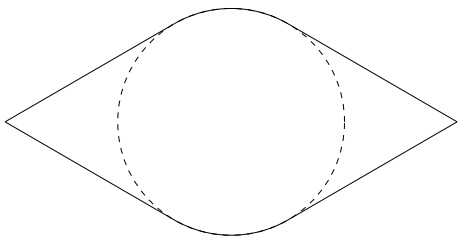

Figure 1: The two-cap body in 2D, minimizer of the area among convex bodies of prescribed inradius and diameter.

Regarding the maximization problem, it is much harder and we are only able to solve it in the two-dimensional case. At first glance, it seems intuitive that the optimal shape should be a *spherical slice* defined as the intersection of a disk of diameter D with a strip of width $2r$, symmetric with respect to the center of the disk (see Fig. 2). Surprisingly, this is only true for "large" values of D/r (more precisely for $D \geqslant \alpha r$ with $\alpha \simeq 2.388$, see Theorem 2), while for small values of D/r the optimal set is some kind of nonagon made of 3 segments and 6 arcs of circle inscribed in an equilateral triangle (see Fig. 3). For the precise definition of this set, we refer to Definition 2 hereafter. It is likely that this unexpected solution explains why this elementary *shape optimization* problem remained unsolved up to now.

The article is organized as follows. Section 1.1 is devoted to introducing the optimization problems we will deal with and stating the main results. In Section 1.2, the Blaschke-Santaló diagram $\mathcal{D}$ for

the triple (A, D, r) is plotted. The whole sections 2 and 3 are respectively concerned with the proofs of Theorems 1 and 2. Because of the variety and complexity of optimizers, the proofs appear really difficult and involve several tools of convex analysis, optimal control and geometry.

Let us end this section by gathering some notations used throughout this article:

- $\mathcal{H}^{n-1}$ is the $n-1$ dimensional Hausdorff measure.
- if K is a convex set of $\mathbb{R}^2$, we call respectively $A(K)$, $D(K)$ and $r(K)$ (or alternatively A, D and r if there is no ambiguity) the area, diameter and inradius of K.
- in the more general n-dimensional case, we keep the same notations, except for the volume of K which will be either denoted $V(K)$ or $|K|$.
- $x \cdot y$ is the Euclidean inner product of two vectors x and y in $\mathbb{R}^n$.
- $B(O, r)$ denotes the ball of center O and radius r while $S(O, r)$ is the sphere (its boundary).
- The boundary of the biggest ball included into a convex set will be called *incircle* in dimension 2, *insphere* in higher dimension.

1.1 Optimization problems and main results

Let us first make the notations precise. Let $r > 0$, $D > 2r$ be given and let $\mathcal{K}^n_{r,D}$ be the set of convex bodies of $\mathbb{R}^n$ having as inradius r and as diameter D, namely

$$\mathcal{K}^n_{r,D} = \{K \in \mathcal{K}_n \mid r(K) = r \text{ and } D(K) = D\}.$$

We are interested in the following maximization problem

$$\boxed{\sup_{K \in \mathcal{K}^2_{r,D}} |K|} \tag{$\mathcal{P}_{\max}$}$$

and minimization problem

$$\boxed{\inf_{K \in \mathcal{K}^n_{r,D}} |K|.} \tag{$\mathcal{P}_{\min}$}$$

Note that the condition $D > 2r$ guarantees that the set $\mathcal{K}^n_{r,D}$ is non-empty. If $D = 2r$, problems are obvious since only the ball belongs to the set of constraints $\mathcal{K}^n_{r,D}$.

Let us first observe, since we are working with convex sets, that existence of solutions for Problems ($\mathcal{P}_{\max}$) and ($\mathcal{P}_{\min}$) is almost straightforward.

Proposition 1. *Let (r, D) be two given parameters such that $D > 2r$. Problems ($\mathcal{P}_{\max}$) and ($\mathcal{P}_{\min}$) have a solution.*

Proof. Without loss of generality, by using an easy rescaling argument, one can deal with sets of constraints with unitary inradius, in other words $r = 1$ and with diameter $D > 2$.

Let us deal with the minimization problem ($\mathcal{P}_{\min}$), the case of the maximization problem ($\mathcal{P}_{\max}$) being exactly similar. Let us consider a minimizing sequence $(K_m)_{m\in\mathbb{N}}$. Since we are working with sets of diameter D, up to applying a well-chosen translation to each element of the sequence, on can assume that every convex set K_m is included in a (compact) box B of $\mathbb{R}^n$. Since the set of convex sets included in a given box is known to be compact for the Hausdorff distance [9], there exists a subsequence (still denoted $(K_m)_{m\in\mathbb{N}}$) converging to a convex set K. To conclude, we will prove that the objective function (the area) is continuous with respect to the Hausdorff distance and that the diameter and inradius constraints are stable for the Hausdorff convergence, in other words that K belongs to the admissible set $\mathcal{K}^2_{r,D}$. Recall that the volume and diameter functionals are not

continuous in general for the Hausdorff distance. Nevertheless, when dealing with convex sets, the continuity property becomes true (see [9, 16]).

It remains to show that the inradius constraint is also continuous for the Hausdorff distance. Let $(K_m)_{m\in\mathbb{N}}$ be a sequence of convex bodies converging to K for the Hausdorff distance. Let us introduce $r_m = r(K_m)$, $r = r(K)$ and $x_m \in K_m$, such that $B(x_m, r_m) \subset K_m$. Since (r_m) (resp. (x_m)) is bounded, there exists subsequences still denoted r_m and x_m with a slight abuse of notation, that converges respectively towards $\tilde{r} \geqslant 0$ and $\tilde{x} \in \mathbb{R}^n$. By stability of the Hausdorff convergence for the inclusion (see e.g. [9, Chapter 2 and Prop. 2.2.17]), we have $B(\tilde{x}, \tilde{r}) \subset K$. Therefore, one has $\tilde{r} \leqslant r$. Assume by contradiction that $r > \tilde{r}$. Hence, there exists $x \in K$ and $\alpha > 0$ such that $B(x, \tilde{r} + \alpha) \subset K$. Let us consider the closed disk $\hat{B} = B(x, (\tilde{r} + \alpha)/2)$. By stability of the Hausdorff convergence, one has $B \subset K_m$ whenever m is large enough, which implies that $r(K_m) \geqslant (1 + \alpha)/2$, yielding to a contradiction. The expected continuity property follows.

□

As underlined in the Introduction, Problem ($\mathcal{P}_{\min}$) has already been solved in the two-dimensional case in [12]. In what follows, we will generalize it to the general case $\mathbb{R}^n$, by proving that the two-cap body is the only solution in any dimension.

Theorem 1. *The (unique) optimal shape for Problem ($\mathcal{P}_{\min}$) is the convex hull of a ball of radius r and two points apart of distance D and whose middle is the center of the ball. In other words, any convex set in $\mathbb{R}^n$ with volume V, diameter D and inradius r satisfies:*

$$V \geqslant 2\omega_{n-1} r^n \int_{\arccos(2r/D)}^{\pi/2} \sin^n t dt + \frac{\omega_{n-1} r^{n-1}}{n D^n} \left(D^2 - 4r^2\right)^{(n+1)/2} \tag{1}$$

where ω_{n-1} is the volume of the unit ball in dimension $n-1$. In particular, any convex set in $\mathbb{R}^2$ with area A, diameter D and inradius r satisfies:

$$A \geqslant r\sqrt{D^2 - 4r^2} + r^2 \left(\pi - 2\arccos\left(\frac{2r}{D}\right)\right). \tag{2}$$

Let us turn to the maximization Problem ($\mathcal{P}_{\max}$). Let us introduce particular convex sets of $\mathcal{K}^n_{r,D}$ that will be shown to be natural candidates to solve the maximization problem.

Definition 1 (The symmetric spherical slice $K_S(D)$)**.** *Let $D > 2$. We call symmetric spherical slice and denote by $K_S(D)$ the convex set defined as the intersection of the disc $D(O, D/2)$ with a strip of width 2 centered at O (see Fig. 2). We have*

$$|K_S(D)| = \sqrt{D^2 - 4} + \frac{D^2}{2} \arcsin\left(\frac{2}{D}\right).$$

Definition 2 (The smoothed regular nonagon $K_E(D)$)**.** *Let $D \in]2, 2\sqrt{3}[$. We denote by $K_E(D)$ the convex set enclosed in an equilateral triangle Δ_E of inradius 1 and made of segments and arcs of circle of diameter D in the following way (see Fig. 3): let η_i be the normal angles to the sides of Δ_E (where one sets for example $\eta_1 = -\pi/2$). Let us introduce*

$$\tau = (3 + \sqrt{D^2 - 3})/2 \quad \text{and} \quad h = \sqrt{D^2 - \tau^2}$$

and the points A_i, B_i and M_i, $i = 1, 2, 3$ defined through their coordinates by

$$A_i = \begin{pmatrix} \cos\eta_i + h\sin\eta_i \\ \sin\eta_i - h\cos\eta_i \end{pmatrix}, \quad B_i = \begin{pmatrix} \cos\eta_i - h\sin\eta_i \\ \sin\eta_i + h\cos\eta_i \end{pmatrix}, \quad M_i = (1-\tau) \times \begin{pmatrix} \cos\eta_i \\ \sin\eta_i \end{pmatrix}, \ i = 1, 2, 3.$$

The set $K_E(D)$ is then obtained as follows:

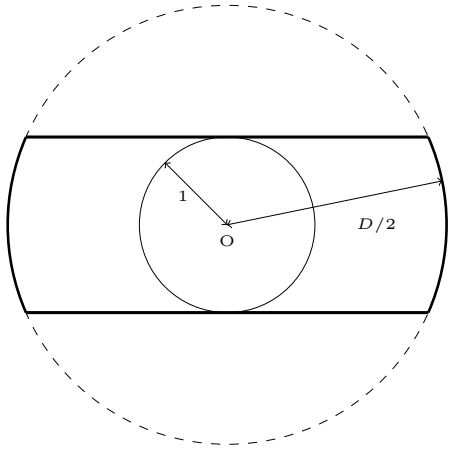

Figure 2: The symmetric slice $K_S(D)$ and its (non unique) incircle.

- *the points A_1, B_1, M_3, A_2, B_2, M_1, A_3, B_3, M_2, A_1 belong to its boundary;*
- *$\widehat{B_1M_3}$ and $\widehat{M_1A_3}$ are diametrally opposed arcs of the same circle of diameter D, and similarly for the two other pairs of arcs of circle $\widehat{B_2M_1}$ and $\widehat{M_2A_1}$, $\widehat{M_2B_3}$ and $\widehat{M_3A_2}$.*
- *the boundary contains the segment $[A_iB_i]$, $i = 1, 2, 3$. Note that the contact point I_i with the incircle is precisely the middle of $[A_iB_i]$,*

Moreover, setting

$$t_1 = \arccos\left(\frac{\sqrt{3}}{D}\right) = \arcsin\left(\frac{2\tau - 3}{D}\right), \quad t_2 = \arccos\left(\frac{\sqrt{3}(\tau - 2)}{D}\right) = \arcsin\left(\frac{\tau}{D}\right),$$

one has

$$|K_E(D)| = \frac{3}{4}D^2(t_2 - t_1) + \frac{3\sqrt{3}}{2}(\sqrt{D^2 - 3} - 1) = \frac{3}{2}D^2\left(\frac{\pi}{3} - t_1\right) + \frac{3\sqrt{3}}{2}\left(\sqrt{D^2 - 3} - 1\right). \tag{3}$$

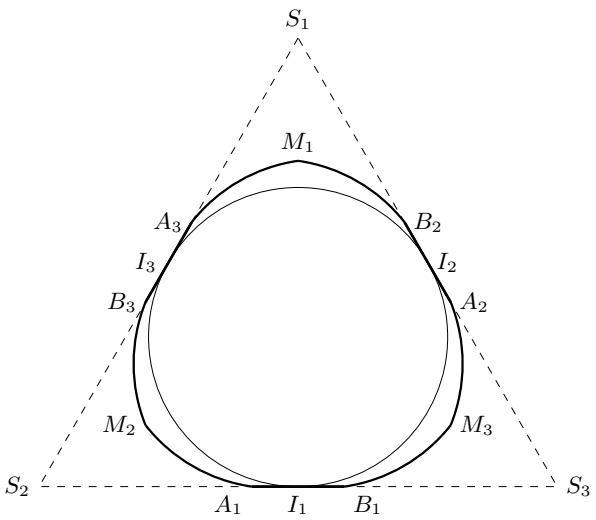

Figure 3: The set $K_E(D)$ and its incircle

In a nutshell, we will prove that for $r = 1$ the set $K_E(D)$ is optimal for small values of D whereas the solution is the symmetric slice for bigger values of D. In what follows, the notation rK with $r > 0$ and $K \in \mathcal{K}^2_{r,D}$ denotes the range of K by the homothety centered at the origin of the considered orthonormal basis, with scale factor r.

Theorem 2. *Let $r > 0$ There exists $D^\star \simeq 2.3888$ such that if $D < rD^\star$, the (unique) solution of Problem ($\mathcal{P}_{\max}$) is $rK_E(D/r)$, and for $D > rD^\star$ the unique solution is $rK_S(D/r)$. For $D = D^\star r$ the two solutions coexist.*

In other words, for every plane convex set with area A, diameter D and inradius r, one has

$$A \leqslant \psi(D,r) \quad \text{where} \quad \psi(D,r) = \begin{cases} \frac{3\sqrt{3}r}{2}\left(\sqrt{D^2-3r^2}-r\right) + \frac{3D^2}{2}\left(\frac{\pi}{3} - \arccos\left(\frac{\sqrt{3}r}{D}\right)\right) & \text{if } D \leqslant rD^\star \\ r\sqrt{D^2-4} + \frac{D^2}{2}\arcsin\left(\frac{2r}{D}\right) & \text{if } D \geqslant rD^\star. \end{cases} \tag{4}$$

More precisely $D^\star$ is the unique number in $[2, 2\sqrt{3}]$ for which both expressions of $\psi(D,r)$ above are equal.

1.2 The Blaschke-Santaló Diagram for (A, D, r)

Usually, Blaschke-Santaló diagrams are normalized to fit into the unit square $[0,1] \times [0,1]$. Thus, starting from the straightforward inequalities $D \geqslant 2r$ and $A \geqslant \pi r^2$ (where A, D and r denote respectively the area, diameter and inradius of any two-dimensional convex set), drives us to choose the system of coordinates $x = 2r/D$ and $y = \pi r^2/A$. We then define the Blaschke-Santaló diagram $\mathcal{D}$ as the set of points

$$\mathcal{D} = \left\{(x,y) \in \mathbb{R}^2, x = 2\frac{r(K)}{D(K)},\ y = \pi\frac{r^2(K)}{A(K)},\ K \in \mathcal{K}_2\right\}.$$

The point $(1,1)$ corresponds to the disk, while the point $(0,0)$ corresponds to an infinite strip. The solution of the minimization problem ($\mathcal{P}_{\min}$) provided in Theorem 1 leads to the upper curve of $\mathcal{D}$. Using (2), we claim that the upper curve is the graph of y^+, defined by

$$y^+(x) = \frac{\pi x}{x(\pi - 2\arccos x) + 2\sqrt{1-x^2}}, \quad x \in [0,1].$$

According to Theorem 2, the lower curve is the graph of y^-, piecewisely defined by

$$y^-(x) = \begin{cases} \dfrac{\pi x}{2\sqrt{1-x^2} + 2\frac{\arcsin x}{x}} & \text{if } x \leqslant 2/D^\star \\ \dfrac{\pi x^2}{2\pi - 6\arccos(\frac{\sqrt{3}x}{2}) + \frac{3\sqrt{3}x}{2}\left(\sqrt{4-3x^2}-x\right)} & \text{if } x \geqslant 2/D^\star. \end{cases}$$

Were already known the inequalities

- $4A \leqslant \pi D^2$ (see [14]) which corresponds to the inequality $y \geqslant x^2$ on the diagram,
- $A \leqslant 2rD$ (see [8]) which is equivalent to $y \geqslant \frac{\pi x}{4}$ on the diagram.

These two inequalities are shown with a dotted line on the diagram hereafter.

To plot the Blaschke-Santaló diagram, it remains to prove that the whole zone between the two graphs $\{(x, y^-(x)),\ x \in [0,1]\}$ and $\{(x, y^+(x)),\ x \in [0,1]\}$ is filled, meaning that each point between these two graphs corresponds to at least one plane convex domain.

Let us start with the part of the diagram on the left of $x \leqslant x^\star := 2/D^\star$. For a given diameter D and inradius r, let K^- denote the convex set with minimal area (the two-cap body) and K^+ the

convex set with maximal area (the symmetric slice). We have $K^- \subset K^+$ and for any $t \in [0,1]$ the convex set K_t : constructed according to the Minkowski sum $K_t = tK^+ + (1-t)K^-$ with $t \in [0,1]$, is known to satisfy $K^- \subset K_t \subset K^+$. Therefore, all the sets K_t share the same diameter D, the same inradius r and their area is increasing from $A(K^-)$ to $A(K^+)$. This way, it follows that the whole vertical joining $(2r/D, y^-(2r/d))$ to $(2r/D, y^+(2r/d))$ is included in $\mathcal{D}$ as soon as $2r/D \leqslant 2/D^\star$.

Let us consider the remaining case $x \geqslant x^\star := 2/D^\star$. Starting from the optimal domain K^+ which maximizes the area with given D and r (recall that K^+ is the convex set inscribed in the equilateral triangle introduced in Definition 2), we fix one of its diameter, say $[A, B]$ and we shrink continuously K^+ to the set K_{AB} defined as the convex hull of the points A, B and the disk of radius r contained in K^+. Secondly, we move the points A, B continuously to the points A', B' at distance D, oppositely located with respect to the center of the disk (in the sense that the center is the middle of A', B') by keeping the convex hull with the disk at each step. The final step is therefore the two-cap body K^- and we have constructed a continuous path between K^+ and K^- keeping the diameter and the inradius fixed: it follows that the whole joining $(2r/D, y^-(2r/d))$ to $(2r/D, y^+(2r/d))$ for $2r/D \geqslant 2/D^\star$ is included in $\mathcal{D}$. At the end, $\mathcal{D}$ has only one connected component.

The complete Blaschke-Santaló diagram is plotted on Fig. 4 below.

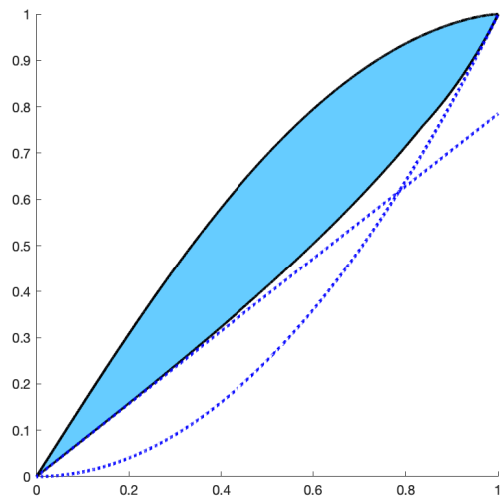

Figure 4: The Blaschke-Santaló diagram $\mathcal{D}$ for (A, D, r) (colored picture). The dotted lines represents the known inequalities $4A \leqslant \pi D^2$ and $A \leqslant 2rD$.

Remark 1. It is notable that the two-cap body has been showed to solve a shape optimization problem motivated by the understanding of branchiopods eggs geometry in biology, and involving packings (see [7]).

2 Proof of Theorem 1

Let us first introduce several notations. For a generic convex set K, we will denote by A and B the points of K realizing the diameter, and respectively by O and r the center and radius of an insphere (the boundary of the biggest ball included in K). Introduce $\mathcal{B} = (e_1, ..., e_n)$ an orthonormal basis such that $e_n = \overrightarrow{AB}/AB$, so that the coordinates of A and B in $\mathcal{B}$ are

$$A = (0, 0, ..., 0) \quad \text{and} \quad B = (0, 0, ..., 0, D).$$

More generally, we will denote by $(x_1, \ldots, x_n)$ the coordinates of a generic vector X in $\mathcal{B}$.

First, in order to relax the conditions $D(K) = D$ and $r(K) = r$ in Problem ($\mathcal{P}_{\min}$), we show that it is equivalent to deal with the conditions $r(K) \geqslant r$ and $D(K) \geqslant D$, which are always saturated at the optimum.

Lemma 1. *Let $r > 0$ and $D > 2r$. Let us consider the minimization problem*

$$\inf_{K \in \widehat{\mathcal{K}}^n_{r,D}} |K|. \tag{$\widehat{\mathcal{P}}_{\min}$}$$

where $\widehat{\mathcal{K}}^n_{r,D} = \{K \in \mathcal{K}_n \mid r(K) \geqslant r \text{ and } D(K) \geqslant D\}$. Then, Problem ($\widehat{\mathcal{P}}_{\min}$) has at least a solution $K^\star$ and moreover, one has $D(K^\star) = D$ and $r(K^\star) = r$.

Proof. Existence of $K^\star$ follows by an immediate adaptation of the proof of Proposition 1 (if the diameter goes to $+\infty$ it is easy to prove that the volume must blow up).

Regarding the second part of the statement, let us argue by contradiction, assuming that $r(K^\star) > r$. We use the coordinate system associated to the basis $\mathcal{B}$ introduced above, constructed from a diameter $[AB]$ of $K^\star$. Defining $\lambda = r/r(K^\star) < 1$ and applying to $K^\star$ the linear transformation whose matrix in $\mathcal{B}$ is $\mathrm{diag}(\lambda, ..., \lambda, 1)$, we obtain a new convex set K' with diameter D and inradius r. Moreover, its volume is $\lambda^{n-1}|K^\star| < |K^\star|$. this is in contradiction with the minimality of $K^\star$.

Similarly, arguing still by contradiction, let us assume that $D(K^\star) > D$. Since $D > 2r = 2r(K^\star)$, there exist A' and B' in $[A, B]$ such that $A'B' = D$. Given O, the center of an insphere, we consider the set K' defined as the convex hull of A', B' and $B(O, r)$. From this construction and by convexity, K' is strictly included in K, $D(K') \geqslant D$ and $r(K') \geqslant r$. Therefore, one has $K' \in \widehat{\mathcal{K}}^n_{r,D}$ and $|K'| < |K|$, which is in contradiction with the optimality of K. The conclusion follows. □

It follows in particular from this result that the solutions of Problems ($\mathcal{P}_{\min}$) and ($\widehat{\mathcal{P}}_{\min}$) coincide.

Furthermore, if K is a general convex body in $\mathcal{K}^n_{r,D}$, by repeating the argument used to deal with the diameter constraint in the proof of Lemma 1, one sees that the convex hull of A, B and $B(O, r)$ also belongs to $\mathcal{K}^n_{r,D}$ and has a lower measure than the one of K.

Therefore, any minimizer $K^\star$ is necessarily the convex hull of two points A and B realizing its diameter, and $B(O, r)$, whose boundary is an insphere We note K_O such a set. The next result proves a symmetry property of $K^\star$.

Lemma 2. *Let $D > 2r > 0$ and A, B be two points at distance D in $\mathbb{R}^n$. For any $O \in \mathbb{R}^n$, define the set $K_O := \mathrm{conv}(A, B, B(O, r))$. Then $K_O \in \mathcal{K}^n$ and $|K_O| \geqslant |K_{O'}|$ where O' is the orthogonal projection of O onto the line containing A and B, with equality if and only if $O = O'$.*

Proof. Assume that that $O \neq O'$ we will prove that $|K_O| > |K_{O'}|$. Two cases may happen.

1. The ball $B(O, r)$ does not meet the diameter $[AB]$.
2. The ball meets the diameter $[AB]$.

In the first case let $a = OO' - r > 0$, and assume that $e_1 = \overrightarrow{OO'}/OO'$. Let us consider $S(K_O)$ the Steiner symmetrization of K_O with respect to the hyperplane with normal vector e_1 and containing A and B. It is a well known result (see [4]) that $S(K_O)$ is still convex with same area as K_O. Furthermore it contains $B(O', R)$, A and B. So it contains $K_{O'}$. Let us finally remark that $K_O \cap (OO')$ has length $2r + a$, and so $S(K_O)$ contains the point $C = (x_O, r + a/2, 0, .., 0)$ which is not in $K_{O'}$. By convexity we deduce that $|K_{O'}| < |K_O|$.

In the second case, we will distinguish three parts in $S(K_O)$, and for each part we will compare the volume of K_O with the one of $K_{O'}$. The main difficulty of what follows consists in proving that the area of the set $K_{O'}$ is strictly smaller than that of K_O, the corresponding large inequality being easily obtained with the properties of the symmetrization. Consider the upper part K_O^+ of K_O,

namely $K_O \cap \{X \in \mathbb{R}^n \mid X \cdot e_n \in [x_O, D]\}$. Let Γ_B be the set of points of $B(O,r)$ whose tangent hyperplane contains B, and Γ'_B be the set of points of $S(O',r)$ whose tangent hyperplane contains B. By symmetry, all the points of Γ'_B share the same last coordinate x'. Let x_1 and x_2 denote respectively the minimal and maximal first coordinate of points of Γ_B. Hence, one has $x_O + r > x_2 > x_1 > x_O$ and moreover, $x' \in (x_1, x_2)$ (see points M, M_1, and M_2 in Fig. 5).

Let us distinguish between three zones of K_O^+:

- *On* $K_O^+ \cap \{X \in \mathbb{R}^n \mid X \cdot e_n \in [x_O, x_1]\}$. It is easy to see that $B(O',r) \cap \{X \in \mathbb{R}^n \mid X \cdot e_n \in [x_O, x_1]$ is exactly the image of

$$K_O^+ \cap \{X \in \mathbb{R}^n \mid X \cdot e_n \in [x_O, x_1]\} = B(O',r) \cap \{X \in \mathbb{R}^n \mid X \cdot e_n \in [x_O, x_1]\}.$$

  by the translation vector $\overrightarrow{O'O}$. These two sets have therefore the same measure.

- *On* $K_O^+ \cap \{x \in [x_1, x']\}$. For $x \in \mathbb{R}$, let H_x be the affine hyperplane whose equation in $\mathcal{B}$ is $\{X \in \mathbb{R}^n \mid X \cdot e_n = x\}$, and introduce $K_x = K_O \cap H_x$. If $x \in [x_O - r, x_O + r]$, let B_x be the $n-1$ dimensional ball $B(O',r) \cap H_x$. By construction, one has $\mathcal{H}^{n-1}(B_x) < \mathcal{H}^{n-1}(K_x)$ for all $x > x_1$. As a consequence

$$|B(O,r) \cap \{X \in \mathbb{R}^n \mid X \cdot e_n \in [x_1, x']\}| < |K \cap \{X \in \mathbb{R}^n \mid X \cdot e_n \in [x_1, x']\}|.$$

- *On* $K_O^+ \cap \{X \in \mathbb{R}^n \mid X \cdot e_n \in [x', D]\}$. Define $C_{x'}$ as the cone with vertex B and basis $B_{x'} = B(O',r) \cap H_{x'}$. Since $C_{x'}$ is the convex hull of $B_{x'}$ and B, it follows that $|C_{x'}| < |K^\star \cap \{X \in \mathbb{R}^n \mid X \cdot e_n \in [x', D]\}|$.

It follows that $|K_{O'} \cap \{x \in [x_0, D]\}| < |K_O \cap \{x \in [x_0, D]\}|$. Doing the same construction on the lower part of K_O yields at the end that $|K_{O'}| < |K_O|$. The expected result follows. □

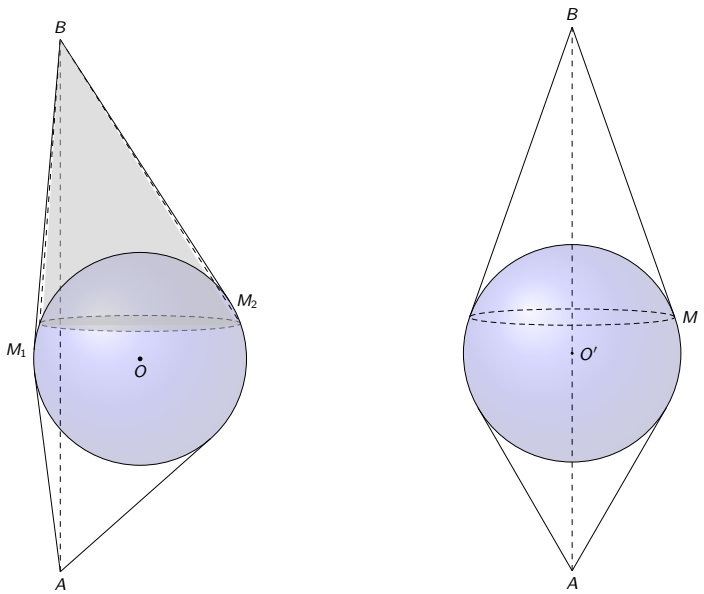

Figure 5: Illustration of the proof of Lemma 2. The convex set on the right has the same inradius and diameter as the one on the left but a lower volume.

To sum-up, we know that any minimizer $K^\star$ is of the type K_O, the convex hull of A, B and $B(O,r)$, where $AB = D$ and A, B and O are collinear. it remains to show that the minimum is

reached whenever O is in the middle of the $[AB]$. This can be done by an explicit computation, but we propose a more geometrical proof based again on Steiner symmetrization.

Let us argue by contradiction, considering $O \in [AB]\backslash\{I\}$, where I is the middle of $[AB]$ and assuming that $K^\star = K_O$. Let $\mathcal{H}$ be the hyperplane containing I with normal vector $\overrightarrow{AB}$. Let K' be the Steiner symmetrized of $K^\star$ with respect to $\mathcal{H}$. We claim that $K' \in \mathcal{K}^n_{r,D}$. Indeed, by monotonicity of the Steiner symmetrization with respect to the inclusion and since the range of $B(O,r)$ by the Steiner symmetrization is $B(I,r)$, one has necessarily $r(K') \geqslant r(K^\star)$. In the same way, observe that the strip $\mathcal{S} := \{x \in \mathbb{R}^n \mid x_1 \in [-r/2, r/2]\}$ is invariant by the Steiner symmetrization and contains $K^\star$. By using again the aforementioned monotonicity property, one has also $K' \subset \mathcal{S}$, and therefore, $r(K') \leqslant r = r(\mathcal{S})$. Therefore, one has $r(K') = r$. It is standard that Steiner symmetrization reduces diameter. Moreover, since $[AB]$ is invariant by the Steiner symmetrization and since $[AB] \subset K'$, one has $D(K') \geqslant D$ and thus $D(K') = D$.

Since $|K'| = |K^\star|$ by property of the Steiner symmetrization, it follows that K' solves Problem ($\mathcal{P}_{\min}$).

It now remains to investigate the equality case, namely to compare $|K'|$ and $|K_I|$ where we recall that $K_I = \mathrm{hull}(A, B, B(I,r))$. More precisely we will prove that K' has a larger volume than K_I. In the basis $\mathcal{B}$, let $x_1^* \in (0,r)$ be such that $K_I \cap \{x_1 \geqslant x_1^\star\} = B(I,r) \cap \{x_1 \geqslant x_1^\star\}$ and $B(O,r) \cap \{x_1 \geqslant x_1^\star\} \subsetneq K_O \cap \{x_1 \geqslant x_1^\star\}$. The existence of $x_1^\star$ follows from the dissymmetry of K_O with respect to $\mathcal{H}$. Using one more time the monotonicity property of the Steiner symmetrization with respect to the inclusion, one has

$$B(I,r) \cap \{x_1 \geqslant x_1^\star\} \subsetneq K' \cap \{x_1 \geqslant x_1^\star\},$$

which implies that the volume of K' is strictly larger than the one of $\mathrm{hull}(A, B, B(I,r))$. We have thus reached a contradiction and it follows that one has necessarily $O = I$, meaning that $K^\star = \mathrm{hull}(A, B, B(I,r))$, which concludes the proof.

3 Proof of Theorem 2

In the whole proof, for a given set $K \in \mathcal{K}_2$, we will denote by C_K an incircle of K. It is standard that K is tangent to C_K at two points at least.

Definition 3. *Let $K \in \mathcal{K}_2$. A point $x \in K$ is said to be diametral if there exists $y \in K$ such that $\|x - y\| = D(K)$.*

Obviously, if x is diametral, then it belongs necessarily to ∂K. Denoting by y its counterpart, if the boundary of K is $\mathscr{C}^1$ at x, the outward unit normal vector at x on ∂K is $n(x) = (x-y)/\|x-y\|$.

In what follows, we will consider a solution $K^\star$ to Problem ($\mathcal{P}_{\max}$), whose existence is provided by Proposition 1.

Since the area is maximized, it seems natural to look for the largest possible set and thus to saturate the diameter constraint at each point. Nevertheless, the inradius constraint tends to stick the convex body onto the circle. M. Belloni and E. Oudet in [1] worked on the minimal gap between the first eigenvalue of the Laplacian λ_2 and the first eigenvalue of the ∞−Laplacian λ_∞. Since $\lambda_\infty(\Omega) = 1/r(\Omega)$ and λ_2 is decreasing for the inclusion, some of their results were obtained by constructing bigger sets while maintaining the inradius and the diameter. The following lemma is an example.

Lemma 3 ([1])**.** *Let $x \in \partial K^\star$. Then, one has the following alternative:*

1. *x is non diametral and belongs to the interior of a segment of $\partial K^\star$.*
2. *x is diametral and is not in the interior of a segment of $\partial K^\star$.*

3. x is in the intersection of two segments of $\partial K^\star$.

To locate the segments of $\partial K^\star$ and provide an estimate of their numbers, we need the notion of *contact point.*

Definition 4. *A contact point of $\partial K^\star$ is a point x at the intersection of $\partial K^\star$ and an incircle $C_{K^\star}$ of $K^\star$. Similarly, a contact line is a support line of $K^\star$ passing by a contact point. Note that it is also a support line of $C_{K^\star}$.*

Observe that the relative interior of a segment of $\partial K^\star$ is necessarily made of non diametral points. Note that the incircle is *a priori* not unique. Let us consider all the possibilities:

- **case 1:** the incircle is not unique. In that case the convex $K^\star$ is necessarily included in a strip of width 2, and every incircle touches both lines of the strip.

  Indeed, let C_1 and C_2 be two incircle and O_1 and O_2 their center. We consider a basis in which the coordinates of O_1 are $(-a, 0)$ and those of O_2 are $(a, 0)$. Let N_i (resp S_i) be the north (resp. south) pole of C_i. By convexity the rectangle $N_1N_2S_2S_1$ is included in $K^\star$. Now suppose that $K^\star$ is not included in the strip formed by the lines (N_1N_2) and (S_1S_2). Then there exist a point $M(x, y) \in K^\star$ with $-a \leqslant x \leqslant a$ and $y > 1$. By construction, the pentagon $N_1MN_2S_2S_1$ is convex, included in $K^\star$, and its inradius is larger than 1 (see Fig. 6) which contradicts the inradius constraint.

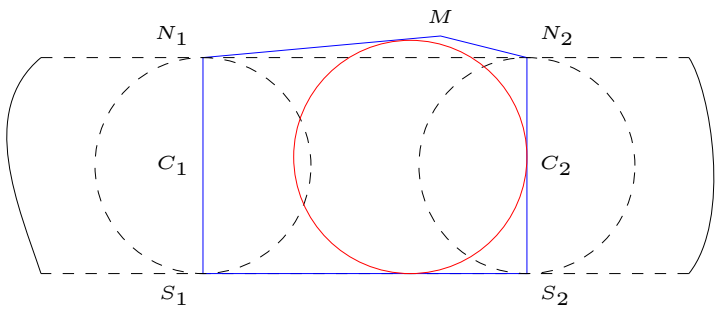

Figure 6: The middle circle is larger than the others, so the inradius is larger than 1.

- **case 1bis:** the incircle is unique, but still inscribed between two strips. In this case it is even included in a square, which is covered by the case 1.
- **case 2 :** the incircle is unique, and there are exactly three contact lines, forming a triangle containing both the circle and the convex.

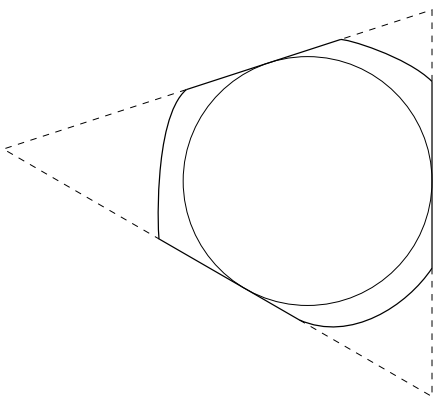

Figure 7: A convex set with three contact points

We sum-up these information in the following lemma.

Lemma 4. *Any segment of $\partial K^\star$ contains a contact point. Furthermore, $\partial K^\star$ contains at most three segments.*

Proof. If a segment of $\partial K^\star$ does not touch an incircle, it would be possible to inflate this part without changing the inradius nor violating the diameter constraint. The upper bound on the number of segments is a direct consequence of the previous analysis: if K has more than the minimal numbers of segments that are useful to prescribe the incircle, then some are useless and can be inflated without consequences on the constraints. □

In what follows, we will work separately on the cases 1 and 2. Section 3.1 deals with the first case, whereas Section 3.2 is devoted to the investigation of the second case.

Thanks to an easy renormalization argument, we will assume without loss of generality that the inradius of the considered convex sets is equal to 1 ($r = 1$).

$\mathrm{Diam}(K) = D$ but $|K| > |K^\star|$, leading to a contradiction with the optimality of $K^\star$.

3.1 First case: $K^\star$ is included in a strip

Let $C_{K^\star}$ be an incircle of $K^\star$. To investigate the case where $K^\star$ is included in a strip, we consider a basis $\mathcal{B}$ whose origin O is the center of $C_{K^\star}$ and such that the equations of the two contact points support lines are $x = 1$ and $x = -1$ (see Fig. 8). Let us denote by $\mathcal{S}$, the closed strip $\{(x, y) \in \mathbb{R}^2 \mid |x| \leqslant 1\}$.

We investigate in this section a constrained version of Problem ($\mathcal{P}_{\max}$), namely

$$\sup_{\substack{K \in \mathcal{K}^2_{r,D} \\ K \subset \mathcal{S}}} |K|. \tag{$\mathcal{P}'$}$$

Proposition 2. *The symmetric slice $B(O, D/2) \cap \mathcal{S}$, where $B(O, D/2)$ denotes the open ball centered at O with radius $D/2$, is the unique solution of Problem ($\mathcal{P}'$). The optimal area is*

$$\max_{\substack{K \in \mathcal{K}^2_{r,D} \\ K \subset \mathcal{S}}} |K| = \sqrt{D^2 - 4} + \frac{D^2}{2} \arcsin\left(\frac{2}{D}\right).$$

The set $K^\star$ is plotted on Fig 8 right.

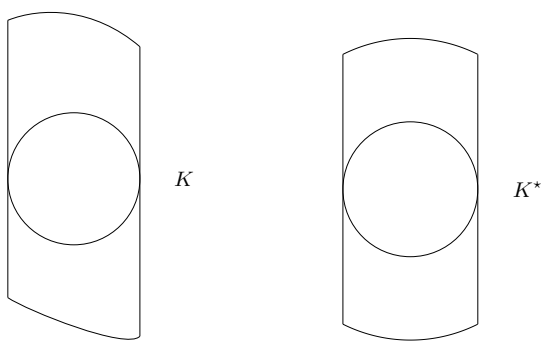

Figure 8: Left: a convex set K whose (non unique) incircle has two parallel contact lines. Right: the optimal domain $K^\star$ among convex sets included in a slice.

The end of this section is devoted to the proof of Prop. 2. It is straightforward that, if a convex set K belongs to $\mathcal{K}^2_{r,D}$ and is included in $\mathcal{S}$, then there exist two concave nonnegative functions f and g on $[-1,1]$ such that

$$K = \{(x,y) \in \mathbb{R}^2, x \in [-1,1], -g(x) \leqslant y \leqslant f(x)\}. \tag{5}$$

With these notations, the optimal set $K^\star$ introduced in Prop. 2 corresponds to the choices

$$f = y_D, \quad g = y_D \quad \text{where} \quad y_D(x) = \sqrt{D^2/4 - x^2}.$$

The proof consists of two steps: first, we provide necessary optimality conditions on an optimal pair (f,g) and show in particular that the aforementioned symmetric slice is a solution. Then, we investigate uniqueness properties of the optimum.

Lemma 5. *Let $K^\star$ be a solution of Problem ($\mathcal{P}'$). Then, $K^\star$ is of the form (5) and satisfies*

$$f(x) + g(x) + f(-x) + g(-x) = 4y_D(x), \quad x \in [-1,1]. \tag{6}$$

Furthermore, the convex set $\tilde{K}$ of the form (5) with $f = g = y_D$ solves Problem ($\mathcal{P}'$).

Proof. We already know that $K^\star$ writes as (5) for some positive concave functions f and g.

First, by lemma 3, every point of the free boundary part $\partial K^\star_{\text{free}} := \partial K^\star \cap \{(x,y) \in \mathbb{R}^2 \mid x \in (-1,1)\}$ is necessarily diametral. As a consequence, the functions f and g are strictly concave. Indeed, observe that a segment of the boundary of a convex set contains at most two diametral points.

From the parametrization of $K^\star$, we get

$$D^2 = \max_{(x,x')\in[-1,1]^2} (x-x')^2 + (f(x)+g(x'))^2 \quad \text{and} \quad |K^\star| = \int_{-1}^{1} (f+g). \tag{7}$$

We are going to prove the result by performing two consecutive Steiner symmetrizations, the first in the horizontal axis, the second in the vertical axis. Note that those two particular symmetrizations do not change the inradius.

Let us introduce the set $\hat{K}$ of the form (5) where f and g are both replaced by $(f+g)/2$. In other words, $\hat{K}$ is the Steiner symmetrized of $K^\star$ with respect to the horizontal axis. Hence, one gets easily that $|K^\star| = |\hat{K}|$, and $D(\hat{K}) \leqslant D(K^\star)$. Moreover, if $D(\hat{K}) < D(K^\star)$, then $\hat{K}$ is a convex set having the same area as $K^\star$, but a strictly lower diameter. Mimicking the argument used in the proof of Lemma 1 allows us to obtain a convex set in $\mathcal{K}^2_{1D}$ with a larger area than $K^\star$, which is impossible. It follows that one has necessarily $D(\hat{K}) = D(K^\star)$.

Let us set $f^\star = (f+g)/2$ and let $x \in [-1,1]$. Let $K_{\tilde{f}}$ be a set of the form (5) where f and g are both replaced by $\tilde{f}$ defined by

$$\tilde{f}(x) = \frac{f^\star(x) + f^\star(-x)}{2}, \quad x \in [-1,1].$$

In other words, $K_{\tilde{f}}$ corresponds to the Steiner symmetrization of $\hat{K}$ with respect to the vertical axis. Then, using one more time standard properties of the Steiner symmetrization, one gets that $|K^\star| = |K_{\tilde{f}}|$ and for the same reasons as before, we have $D(K^\star) = D(K_{\tilde{f}})$. Therefore, we have constructed a solution with two axes of symmetry.

It follows that $K_{\tilde{f}}$ solves Problem ($\mathcal{P}'$). Furthermore, using that $\tilde{f}$ is even and that each point $(x, \tilde{f}(x))$ is diametral, associated to $(-x, -\tilde{f}(x))$, we finally infer that $x^2 + \tilde{f}(x)^2 = D^2/4$ for all $x \in [-1,1]$. Noting that

$$\tilde{f}(x) = \frac{1}{4}(f(x) + g(x) + f(-x) + g(-x)),$$

every solution $K^\star$ is of the form (5) satisfies (6). Proposition 2 thus follows. □

It remains to investigate the uniqueness of the optimal set, which is the purpose of the next result.

Lemma 6. *Let $K^\star$ be a solution of Problem ($\mathcal{P}'$). Then, $K^\star$ is of the form (5), and for every parametrization (f,g), there exists $\varepsilon > 0$ such that:*

$$f(x) = y_D(x) + \varepsilon, \qquad g(x) = y_D(x) - \varepsilon, \quad x \in [-1,1].$$

Proof. Let (f,g) be a pair of concave positive functions solving Problem ($\mathcal{P}'$). In particular, (f,g) satisfies (6). It follows from the proof of Lemma 5 that there exists a continuous odd function φ_o on $[-1,1]$ such that

$$\frac{f(x)+g(x)}{2} = y_D(x) + \varphi_o(x).$$

Let K be the convex set defined by (5) where f and g are both replaced by $(f+g)/2$. Recall that, according to the proof of Lemma 5, K is also a solution of Problem ($\mathcal{P}'$). Let us focus on the diameter constraint. Since K solves Problem ($\mathcal{P}'$), then one has necessarily

$$\begin{aligned} D^2 &= \max_{(x,x')\in[-1,1]^2} (x-x')^2 + \big(y_D(x) + y_D(x') + \varphi_o(x) + \varphi_o(x')\big)^2 \\ &\geqslant \max_{x\in[-1,1]} (2x)^2 + (y_D(x) + y_D(-x))^2 = D^2. \end{aligned}$$

In particular, since every point of $\partial K \cap \{(x,y) \in \mathbb{R}^2 \mid x \in (-1,1)\}$ is diametral, the function $[-1,1] \ni x' \mapsto (x-x')^2 + \big(y_D(x) + y_D(x') + \varphi_o(x) + \varphi_o(x')\big)^2$ is maximal at $x' = -x$. Note that the function $y_D + \varphi_o$ is (concave and therefore) differentiable almost everywhere in $(-1,1)$, and therefore so is φ_o. Let us consider $x \in [-1,1]$ at which φ_o is differentiable. One has

$$\frac{d}{dx'}\Big((x-x')^2 + \big(y_D(x) + y_D(x') + \varphi_o(x) + \varphi_o(x')\big)^2\Big)\Big|_{x'=-x} = 0$$

which reads $-4x + 4y_D(x)(-y_D'(x) + \varphi_o'(x)) = 0$, and after calculation, implies that $\varphi_o'(x) = 0$. We infer that $\varphi_o'(x) = 0$ for a.e. $x \in (-1,1)$. Since φ_o is absolutely continuous (and even belongs to $W^{1,\infty}(-1,1)$), we infer that φ_o is constant on $(-1,1)$, equal to $\varphi_o(0) = 0$. It follows that $(f+g)/2 = y_D$ and we infer that

$$f(x) = y_D(x) + \varphi_e(x) \quad \text{and} \quad g(x) = y_D(x) - \varphi_e(x),$$

where φ_e denotes a continuous function on $[-1,1]$. One has for every $x \in [-1,1]$,

$$\begin{aligned} D^2 &= \max_{(x,x')\in[-1,1]^2} (x-x')^2 + \big(y_D(x) + y_D(x') + \varphi_e(x) - \varphi_e(x')\big)^2 \\ &\geqslant D^2 + 4y_D(x)\left(\varphi_e(x) - \varphi_e(-x)\right) + \left(\varphi_e(x) - \varphi_e(-x)\right)^2. \end{aligned}$$

and therefore, $4y_D(x)\left(\varphi_e(x) - \varphi_e(-x)\right) + \left(\varphi_e(x) - \varphi_e(-x)\right)^2 \leqslant 0$ so that

$$-4y_D(x) \leqslant \varphi_e(x) - \varphi_e(-x) \leqslant 0.$$

Inverting the roles played by x and $-x$ in this relation yields that $\varphi_e(x) - \varphi_e(-x) = 0$ and φ_e is therefore even.

By using the same reasoning as above, one shows that for almost every x in $(-1,1)$, the derivative of the diameter functional vanishes at $x' = -x$, so that one has $\varphi_e'(x) = 0$ a.e. x in $(-1,1)$. Since φ_e belongs to $W^{1,\infty}(-1,1)$ and is in particular absolutely continuous, we infer that φ_e is constant on $[-1,1]$. The expected conclusion follows noticing that the converse sense is immediate: every pair (f,g) chosen as in the statement of Lemma 6 obviously drives to a solution of Problem ($\mathcal{P}'$). $\square$

Remark 2 (Geometric interpretation of the proof)**.** The proof of Lemma 5 can be understood geometrically: indeed, from a solution, we performed two Steiner symmetrizations: one along the strip, and the other in an orthogonal direction. From the standard properties of Steiner symmetrization (we proved some of them for the sake of completeness) and because of the specific choice of the symmetrization axes, the inradius remains unchanged in this particular case, as well as the area, but the diameter decreases. The difficulty here lies in proving that the diameter is strictly decreasing, whence the uniqueness.

3.2 Second case: K^* is included in a triangle

In that case, the incircle is unique (see Fig 7). We assume without loss of generality that it is the unit circle. There are exactly three contact lines (see Def. 4), forming a triangle called $T(K)$.

Definition 5. *We will call "free boundary γ of $\partial K^\star$" the union of all non flat parts of $\partial K^\star$ and "free zone" every connected component of the free boundary. D is the full disk.*

Recall that according to Lemma 4, there are at most three free zones located between the contact segments.

A crucial tool for the analysis is the so-called *support function* of the convex body K denoted h_K. Recall that h_K is defined for every $\theta \in \mathbb{T}$ by

$$h_K(\theta) = \sup_{y \in K} y \cdot u_\theta \tag{8}$$

where $u_\theta = (\cos(\theta), \sin(\theta)$, and $\mathbb{T}$ is the torus $\mathbb{R}/[0, 2\pi)$. We will systematically choose the center of the circle as the origin. angle θ: The straight line D_θ whose cartesian equation is $x\cos(\theta)+y\sin(\theta) = h_K(\theta)$ is precisely the support line of the convex body K in the direction u_θ (in what follows, we will also name this direction θ with a slight abuse of language).

Let us introduce the sets $F_\theta := D_\theta \cap K$. Note that F_θ is either a segment or a single point. In the latter case, we will denote this point by $M(\theta)$.

Let us finally recall some basic facts on the support function. For a complete survey about this notion, we refer for instance to [16]. When there will be no ambiguity, we will sometimes write h instead of h_K.

The support function h associated to a convex body K is periodic, belongs to $H^1(\mathbb{T})$ and is C^1 on the strictly convex parts of K. Furthermore, the diameter $D(K)$, area $|K|$ and radius of curvature R_K are respectively given in terms of h by

$$D(K) = \sup_{(0,2\pi)} \left(h(\theta) + h(\theta+\pi)\right), \quad |K| = \frac{1}{2}\int_{(0,2\pi)} (h^2 - h'^2), \quad R_K = h + h'' \tag{9}$$

where h'' has to be understood in the sense of distributions.

Let $\mathcal{T}$ be the set of triangles with unit inradius enclosing K. In this section, we will investigate the optimization problem

$$\sup_{T \in \mathcal{T}} \sup_{\substack{K \in \mathcal{K}^2_{r,D} \\ K \subset T}} |K|, \tag{10}$$

which can be recast in terms of support functions as

$$\boxed{\sup_{h \in \mathcal{H}} \frac{1}{2}\int_{(0,2\pi)} (h^2 - h'^2)} \tag{$\mathcal{P}_h$}$$

with

$$\mathcal{H} = \{h \in H^1(0,2\pi), h + h'' \geqslant 0 \text{ in } \mathcal{D}'(\mathbb{T}),\ \exists T \in \mathcal{T} \mid 1 \leqslant h \leqslant h_T, \sup_{\theta \in \mathbb{T}} h(\theta) + h(\theta+\pi) \leqslant D\},$$

where h_T is its support function of T. Note that $h + h''$ is a positive Radon measure. It is essential to ensure that h is the support function of a convex set. The condition $1 \leqslant h \leqslant h_T$ simply means that K, whose support function is h, contains the disk $B(0,1)$ and is included in the triangle T.

Before stating the main result of this section, let us introduce another particular smoothed nonagon, denoted $K_C(D)$.

Definition 6 (The smoothed nonagon $K_C(D)$)**.** *Let $D \in]2, 2\sqrt{3}[$. We denote by $K_C(D)$ the convex set enclosed in an isosceles triangle Δ_I of inradius 1 and made of segments and arcs of circle of diameter D in the following way (see Fig. 9): the normal angles to the sides of Δ_I are*

$$\eta_1 = -\pi/2, \quad \eta_2 = \arcsin(\tau/2 - 1) \quad \textit{and} \quad \eta_3 = \pi - \eta_2,$$

where τ is the unique root in $[2, 3]$ of the equation

$$-\tau^3 + \left(D^2/2 + 5\right)\tau^2 - \left(2D^2 + 4\right)\tau + D^2 = 0.$$

Let us introduce the points A_i, B_i, $i = 1, 2, 3$ and M_3 defined through their coordinates by

$$A_i = \begin{pmatrix} \cos\eta_i + h_i \sin\eta_i \\ \sin\eta_i - h_i \cos\eta_i \end{pmatrix}, \quad B_i = \begin{pmatrix} \cos\eta_i - h_i \sin\eta_i \\ \sin\eta_i + h_i \cos\eta_i \end{pmatrix}, \; i = 1, 2, 3, \quad M_1 = (1 - \tau) \times \begin{pmatrix} \cos(\eta_1) \\ \sin(\eta_1) \end{pmatrix}.$$

with $h_1 = \sqrt{D^2 - \tau^2}$ and $h_2 = h_3 = \frac{h_1}{4}(\tau - 2)$. The set $K_C(D)$ is then obtained as follows:

- *the points A_1, B_1, A_2, B_2, M_1, A_3, B_3 belong to its boundary;*
- *$\widehat{B_2M_1}$ (resp. $\widehat{M_1A_3}$) and $\widehat{A_1B_3}$ (resp. $\widehat{B_1A_2}$) are diametrally opposed arcs of the same circle of diameter D.*
- *the boundary contains the segments $[A_iB_i]$, $i = 1, 2, 3$. Note that the contact point I_i with the incircle is precisely the middle of $[A_iB_i]$,*

Moreover, setting

$$t_1 = \arcsin\left(\frac{2(\sin\eta_1 + h_1\cos\eta_1) - \tau + 2}{D}\right) \quad \textit{and} \quad t_2 = \arcsin\left(\frac{\tau}{D}\right),$$

we have the formula

$$|K_C(D)| = \frac{\tau}{\tau - 2}\sqrt{D^2 - \tau^2} + \frac{D^2}{2}(t_2 - t_1). \tag{11}$$

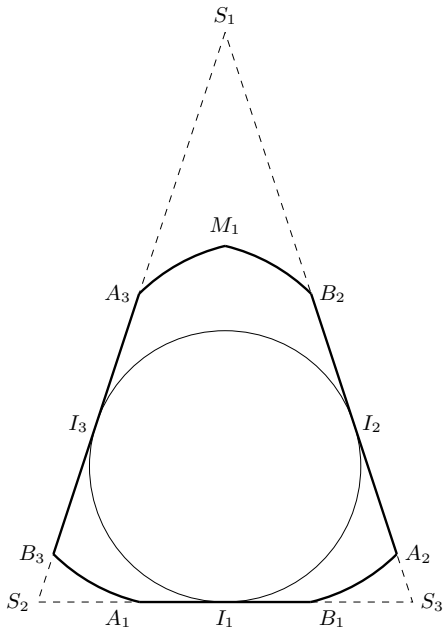

Figure 9: The set $K_C(D)$ and its incircle.

Proposition 3. *Let $D > 2$ be given and assume that Problem (10) has a solution $K^\star$. Then, $K^\star$ is either the set $K_C(D)$ or $K_E(D)$.*

The end of this section is devoted to proving Proposition 3. Hence, let us assume that Problem (10) has a solution denoted K (instead of $K^\star$) for the sake of simplicity. Let T be the triangle of inradius 1 containing K. Let D_{η_i} be the three tangent lines to the unit circle defining T, where η_i is the angle between the horizontal axis and the normal vector to each side of T. We assume that $\eta_1 < \eta_2 < \eta_3$ and we introduce the contact points I_i between the lineD_{η_i} and the unit circle. We also define φ_1, φ_2, φ_3 as the demi angles at the center (see Fig. 10). The problem being rotationally invariant, we will impose without loss of generality that $\eta_1 = -\pi/2$, and $\varphi_1 \leqslant \varphi_2 \leqslant \varphi_3$. Identifying the index i with the index $i+3$, one has

$$\varphi_i = \frac{\eta_{i+2} - \eta_{i+1}}{2}, \quad i = 1, 2, 3.$$

The set $K \cap D_{\eta_i}$ is a segment (possibly reduced to the point I_i) denoted $[A_i, B_i]$. The free boundary γ being strictly convex according to Lemma 4, we parametrize it with the help of a function $\theta \mapsto M(\theta)$ defined on $I_\gamma = (0, 2\pi) \backslash \{\eta_i\}_{i=1,2,3}$, where θ is the angle between the normal to the support line of the point $M(\theta)$ and the abscissa axis. A point M of the free boundary may have several support lines. More precisely, two cases may arise: either a point has a unique supporting line or a point has at least two supporting lines.

Each point M of the second kind is a kind of vertex of K called "angular point" of ∂K. Moreover, considering the smallest and the largest angle made by its supporting lines, one can associate to M a closed interval $J_M \subset I_\gamma$. Notice that two consecutive vertices M and N cannot admit overlapping intervals J_M and J_N since it would mean that γ contains a violating the property that every point in γ saturates the diameter constraint. It also implies that angular points of γ are isolated, whereas points of ∂K of the first kind are represented by a unique angle.

This remark rewrites in the following way in terms of the support function h of K:

(i) if $M(\theta)$ has a unique supporting line, then $\theta + \pi \in I_\gamma$ and $h(\theta) + h(\theta + \pi) = D$;

(ii) in the converse case, there exists $\theta \in J_M$ such that $\theta + \pi \in I_\gamma$ and $h(\theta) + h(\theta + \pi) = D$.

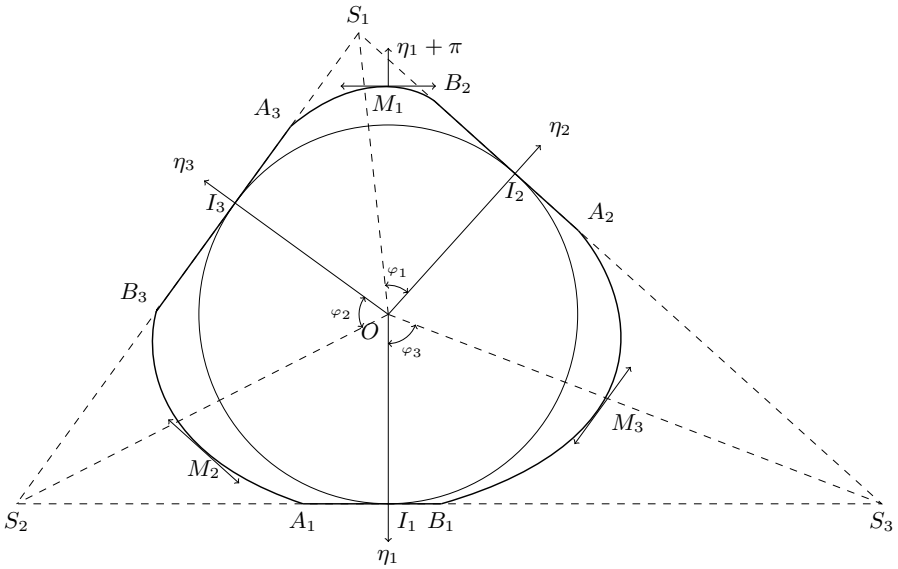

Figure 10: Example of a convex K and the triangle $T(K)$.

Regarding the segments $[A_i, B_i]_{i=1,2,3}$, one has

$$A_i = M(\eta_i^-) = \lim_{\theta\to\eta_i,\theta<\eta_i} M(\theta) \quad \text{and} \quad B_i = M(\eta_i^+) = \lim_{\theta\to\eta_i,\theta>\eta_i} M(\theta).$$

For $i = 1, 2, 3$, let α_i and β_i be such that $M(\theta) = A_i$ for all $\theta \in [\eta_i - \alpha_i, \eta_i)$ and $M(\theta) = B_i$ for all $\theta \in (\eta_i, \eta_i + \beta_i]$. Since angular points are isolated, the free boundary γ near A_i and B_i is made of points of ∂K having a unique supporting line. An easy continuity argument shows that A_i and B_i saturate the diameter constraint. Let us make their diametral point(s) precise. Recall that we introduced F_θ as $D_\theta \cap K$ and let us characterize $F_{\eta_i+\pi}$. Since $\eta_{i+1} - \eta_i < \pi$, $\eta_i + \pi$ cannot belong to $\{\eta_j\}_{j=1,2,3}$, then $F_{\eta_i+\pi}$ is a point denoted $M(\eta_i + \pi)$ or more simply M_i. Considering for instance the point M_1, we have to distinguish between three cases:

- if $\eta_1 + \pi \in (\eta_2 + \beta_2, \eta_3 - \alpha_3)$, meaning that M_1 lies in the interior of the free boundary, then M_1 is diametral with both A_1 and B_1
- if $\eta_1 + \pi \in (\eta_2, \eta_2 + \beta_2)$, then $M_1 = B_2$ and one easily infers that $M_1A_1 = D$
- if $\eta_1 + \pi \in (\eta_3 - \alpha_3, \eta_3)$, then $M_1 = A_3$ and it follows that $M_1B_1 = D$

3.2.1 Geometrical description of optimizers

Lemma 7. *Let $i \in [\![1, 3]\!]$. The contact points I_i between the line D_{η_i} and the incircle is the middle of the segment $[A_i, B_i]$.*

Proof. To prove this, we will use a small perturbation of an angle η_i and get optimality conditions. Without loss of generality, consider I_1 and introduce the lengths $l_A = I_1A_1$ and $l_B = I_1B_1$. Let us consider the following perturbation: we replace η_1 by $\eta_1 + \varepsilon$ for $\varepsilon > 0$ small, and denote by T_ε the triangle whose incircle is $B(0, 1)$, and whose angles are $\eta_1 + \varepsilon$, η_2, and η_3. We denote by $L_{\eta_1+\varepsilon}$ the corresponding tangent line of the unit disk. We now define J_ε as the intersection point between D_{η_1} and $L_{\eta_1+\varepsilon}$. This point satisfies $J_\varepsilon = I_1 + \frac{\varepsilon}{2}(-\sin\eta_1, \cos\eta_1)$. We build a new convex set included in the triangle T_ε by slightly modifying the previous one : replace A_1 and B_1 by A_ε and B_ε located on $L_{\eta_1+\varepsilon}$ in such a way that the diameter constraint is still fulfilled (see Fig. 11). We explicit the construction of A_ε below as the intersection of $L_{\eta_1+\varepsilon}$ with a well chosen line issued from A_1, while B_ε is the intersection of $L_{\eta_1+\varepsilon}$ with the boundary of K. We have to make the balance between

- the area we gain: this is triangle $T(A_1 J_\varepsilon A_\varepsilon)$
- the area we lose: this is the intersection of K with the half-space $\{x \cdot u_{\eta_1+\varepsilon} \geqslant 1\}$. At first order, this area is the same than the area of the triangle $T(B_1 J_\varepsilon B_\varepsilon)$

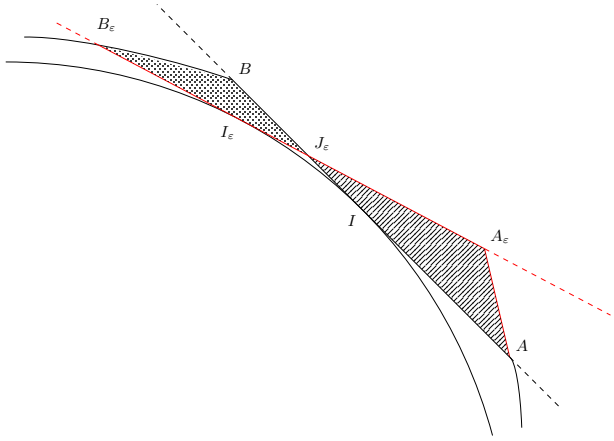

Figure 11: Gain of area (strips) vs loss of area (dots)

The two triangles share the same angle ε, therefore the balance of area is

$$\delta A := \frac{1}{2} \sin \varepsilon \, (J_\varepsilon A_1 . J_\varepsilon A_\varepsilon - J_\varepsilon B_1 . J_\varepsilon B_\varepsilon)$$

Now we can explicitly compute these lengths and get the expansions

$$J_\varepsilon A_1 = l_A + O(\varepsilon), \qquad J_\varepsilon B_1 = l_B + O(\varepsilon),$$

Let us introduce the angle $\theta_A^\varepsilon = \widehat{J_\varepsilon A_1 A_\varepsilon}$. Using elementary trigonometry, we can rewrite the length $J_\varepsilon A_\varepsilon$ as

$$J_\varepsilon A_\varepsilon = \frac{A_1 J_\varepsilon}{\cos \varepsilon + \sin \varepsilon \cot \theta_A^\varepsilon} = l_A (1 - \varepsilon \cot \theta_A^\varepsilon + o(\varepsilon)).$$

Now let us prove that we can choose an angle θ_A^ε which does not go to zero while keeping the diameter constraint satisfied. Suppose $\eta_1 \in [0, \pi/2]$. Recall that A_1 is represented by an interval of angles $I_{A_1} = [\eta_1 - \alpha, \eta_1]$. Let D_{A_1} be the set of points that are diametrical to A_1 and $\Theta_{A_1} \subset I_{A_1} + \pi$ the set of angles representing elements of D_{A_1}:

$$\Theta_{A_1} = \{\theta \in I_\gamma, M(\theta) \in D_{A_1} \text{ and } h(\theta) + h(\theta + \pi) = D\} \subset [0, 2\pi).$$

We claim that there exists $\gamma > 0$ such that for all $\theta' \in [\eta_1 + \pi - \gamma, \eta_1 + \pi]$, $\theta' \notin \Theta_A$. Otherwise the diameter constraint on I_1 would be broken. Let $\zeta = \max(\Theta_{A_1}) < \pi + \eta_1$. Choosing $\theta_A^\varepsilon = (\pi + \eta_1 - \zeta)/2$ fulfills the desired condition for ε small enough and provides a gain of area as $l_A^2 \varepsilon/2 + o(\varepsilon))$.

neighborhood of A on this flat portion does not saturate the diameter constraint. one can prove that at the first order in ε, it consists in taking the line with vector $\zeta + \pi$. Take A_ε as the intersection of this line with the tangent of the unit circle with angle $\eta_1 + \varepsilon$. The desired angle is $\theta = \eta_1 - \zeta - \pi = O(1)$. This construction is such that $K \cup T(A J_\varepsilon A_\varepsilon)$ still fulfills the diameter constraint as well as the convexity constraint. since $\delta - \pi \geqslant \eta_1 - \alpha$

On the side of B there is no problem with the diameter constraint, thus we simply observe that $J_\varepsilon B_\varepsilon = l_B + O(\varepsilon)$ by construction. Therefore we get a loss of area as $l_B^2 \varepsilon/2 + o(\varepsilon))$.

Thus we infer that the difference of areas is equal to $\delta A = \frac{\varepsilon}{2}(l_A^2 - l_B^2) + o(\varepsilon)$ which has to be non-positive, which leads to $l_A \leqslant l_B$ at the optimum. We repeat the argument with $\varepsilon < 0$ to get $l_B \leqslant l_A$, whence the equality.

□

Now we are going to prove that the free boundary is made of arcs of circle of radius $D/2$ by working on the radius of curvature R. It consists of three steps. We show first that this radius can only take the values 0, $D/2$ or D on the free boundary. Then we prove that the set $\{R = D\}$ is necessarily of empty interior to finally deduce that the radius of curvature on non angular points can only be $D/2$.

Lemma 8. *On the free boundary γ of K, the radius of curvature is almost everywhere equal to either 0, $D/2$ or D.*

Proof. According to the above discussion, we will distinguish between points of the free boundary γ having a unique support line, and angular points. Since angular points are isolated on ∂K, it means that points of γ having a unique support line define an open subset γ_1 of γ or equivalently that their angle parametrization define an open subset I_1 of $I_\gamma = (0, 2\pi)\backslash\{\eta_i\}_{i=1,2,3}$. Any point of the complement set of γ_1 is an angular point, and therefore its radius of curvature is zero. Thus, it remains to look at points of γ_1.

Recall that, since K is a convex set, its radius of curvature defines a nonnegative Radon measure. For any $\theta \in I_1$ one has $h(\theta) + h(\theta + \pi) = D$. Differentiating twice this equality and since $R = h + h''$, one gets that $R + \tau_\pi R = D$ in the sense of measures in I_1, where τ_π is the translation operator given by $\tau_\pi(f) = f(\pi + \cdot)$ for every continuous function f. It follows that $0 \leqslant R(\theta) \leqslant D$ for a.e. θ in $\mathbb{T}$ and thus, R is a bounded function, allowing us to write

$$\forall \theta \in I_1, \quad R(\theta) + R(\theta + \pi) = D. \tag{12}$$

Let us now prove that for almost every $\theta \in I_1$, one has $R(\theta) \in \{0, D/2, D\}$. Let us assume that the set $\omega = \{\theta \in I_1 \mid 0 < R(\theta) < D\}$ has a positive measure, otherwise it means that $R = 0$ or $R = D$ a.e. and we are done. Let us first show that R is necessarily constant on ω. Let us argue by contradiction: assume there exist two subsets ω_1 and ω_2 such that $|\omega_1| = |\omega_2| > 0$ and

$$\int_{\omega_1} R(\theta)\, d\theta > \int_{\omega_2} R(\theta)\, d\theta. \tag{13}$$

Let us consider a regularization ξ of the function v defined by

$$v(\theta) = \begin{cases} +1 & \text{if } \theta \in \omega_1, \quad -1 \quad \text{if } \theta \in \omega_1 + \pi \\ -1 & \text{if } \theta \in \omega_2, \quad\ \ 1 \quad \text{if } \theta \in \omega_2 + \pi \end{cases}$$

and we will deal with the perturbation $h + \varepsilon v$ of the support function h for $\varepsilon > 0$ small. In what follows, we should deal with the regularization ξ, work on a subset of ω on which $0 < \eta \leqslant h(\theta)$, and finally pass to the limit $\eta \searrow 0$. To avoid technicalities, we will directly write the asymptotic of the derivative of the area under this perturbation, with a slight abuse of notation.

Since the area of the domain is

$$|K| = J(h) \quad \text{where } J(h) = \frac{1}{2}\int_0^{2\pi} (h^2(\theta) - h'^2(\theta))\, d\theta,$$

the first derivative of the area under the perturbation above reads as

$$\langle dJ(h), \xi\rangle = \int_{\omega_1\cup\omega_2\cup(\omega_1+\pi)\cup(\omega_2+\pi)} h\xi - h'\xi' = \int_{\omega_1\cup\omega_2\cup(\omega_1+\pi)\cup(\omega_2+\pi)} (h + h'')\xi.$$

By definition of ξ, one gets

$$\langle dJ(h), \xi\rangle = \int_{\omega_1} R - \int_{\omega_2} R - \int_{\omega_1+\pi} R + \int_{\omega_2+\pi} R$$

and according to (12), it comes

$$\langle dJ(h), \xi \rangle = \int_{\omega_1} R - \int_{\omega_2} R - \int_{\omega_1} (D - R) + \int_{\omega_2} (D - R) = 2 \left(\int_{\omega_1} R - \int_{\omega_2} R \right) > 0$$

leading to a contradiction. It follows that R is necessarily constant on ω. Let us moreover show that the constant value of R is precisely $D/2$. We proceed similarly: let us choose a perturbation ξ equal to 1 on a subset ω_1 and -1 on $\omega_1 + \pi$. The same computation as above leads to

$$\langle dJ(h), \xi \rangle = \int_{\omega_1} R - \int_{\omega_1} (D - R) = \int_{\omega_1} (2R - D),$$

and we conclude since this derivative must be zero (indeed, if this derivative would not vanish, either the admissible perturbation ξ or $-\xi$ would make the area increase). We conclude that necessarily $R \in \{0, D/2, D\}$ on I_1.

$\{R = D\}$ are unions of intervals and to locate them. For that purpose we will now study the perturbation on $R = h + h''$. By definition of R, it is a radon measure such that $\int_{(0,2\pi)} \cos dR = \int_{(0,2\pi)} \sin dR = 0$. Now Suppose that R is optimal. Let $J \subset I_1$ and consider a perturbation ξ on $J \cup J + \pi$ such that C^1 and $h'' \in L^\infty$ with $h + h'' = R$. Differentiating twice and adding yields $\psi + \psi'' = R - D/2$. suppose for example that $J_D = J \cap S_D$ has nonempty interior. Then $\psi \geqslant 0$ on J_D and $\psi + \psi'' = D$. Let ψ evolve freely along the differential equation until ψ vanishes and goes below 0. Then *psi* becomes negative and is ruled by the differential equation $\psi + \psi'' = 0$

□

From this lemma we deduce that if the boundary ∂K contains an arc of circle of radius $D/2$, it also contains its antipodal part (in other words the set of points of ∂K diametrically opposed to those of the arc of circle), and if it contains an arc of circle of radius D, it also contains its center. Let us show that this second case cannot occur, following an idea in [1].

Lemma 9. *The two assertions are incompatible:*

- *the free boundary γ contains an arc of circle of radius D;*
- *its center belongs to ∂K.*

Proof. Let us argue by contradiction. Let us denote by C the circle of radius D one arc of which belongs to γ and by $P \in \partial K$ its center. Note that since C saturates the diameter constraint, according to lemma 3, it belongs to the free boundary γ or lies in the intersection of two segments. In this last case K has only two free zones and C is an edge of T. Anyway C is not in the neighborhood of any contact point. By choosing adequately an orthonormal basis, assume that the coordinates of P are $(-D/2, 0)$ and the coordinate of the center of the arc, denoted by Q, are $(D/2, 0)$. Now for $\varepsilon > 0$ consider Q_ε whose coordinates are $(D/2 + \varepsilon, 0)$ and define

$$K_\varepsilon = \text{hull}(K \cup Q_\varepsilon) \cap B(Q_\varepsilon, D).$$

where $B(Q_\varepsilon, D)$ is the disc of center Q_ε and radius D.

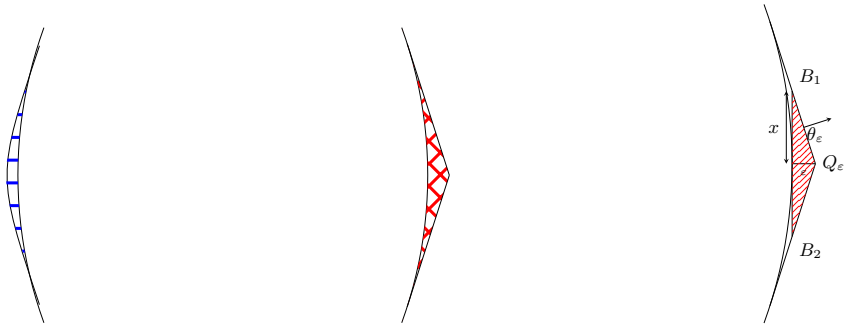

Figure 12: Left: gain of area (red crosshatch) vs loss of area (blue horizontal lines). Right: calculus of the gain.

Since the free boundary is modified locally, far from the contact point, the inradius remains unchanged and the diameter also by construction. This transformation drives to a gain of area on the right part, and a loss on the left part (see Fig. 12). Let us show that the gain is $O(\varepsilon\sqrt{\varepsilon})$ and the loss is $O(\varepsilon^2)$.

- **gain:** using the notations on the right part of Fig. 12, one determine a lower bound of the area gain by computing the area of the triangle $B_1Q_\varepsilon B_2$. Here $x = \varepsilon/\tan(\theta_\varepsilon)$ with $\cos(\theta_\varepsilon) = D/(D+\varepsilon)$, and therefore, $x = \mathrm{O}(\sqrt{\varepsilon})$, and thus, a lower bound on the area gain is $\mathrm{O}(\varepsilon\sqrt{\varepsilon})$.
- **loss:** note that if the radius of curvature is D on an open interval, thus it is equal to 0 on its antipodal interval. It means that the center of the corresponding arc of circle is an angular point, and hence it admits two different tangent lines. By convexity, the loss area is less than the one of the triangle formed by the point P, and the two intersection points of the tangent with the circle $C(Q_\varepsilon, D)$. Now the angle of the tangents does not depend on ε, and the same kind of calculus shows that the area loss is $\mathrm{O}(\varepsilon^2)$.

Hence, choosing $\varepsilon > 0$ small enough guarantees that $|K_\varepsilon| > |K|$ and we have thus reached a contradiction. □

Let us complete the description of the free boundary with the help of two lemmas.

Lemma 10. *The free boundary γ of K is the union of arc of circles of diameter D (i.e. the radius of curvature is equal almost everywhere to $D/2$ on γ), that are mutually antipodal.*

Proof. either $0, D/2$ or D on the free boundary, and lemma 9 shows that on every interval I where the relation $h(\theta)+h(\theta+\pi) = D$ holds, the curvature cannot be 0 or D in any subinterval. Otherwise we would have an arc of circle of diameter D, which is impossible. As usual, we denote the optimal set by K in this proof. We will consider its radius of curvature R as a variable. Recall that, globally, R is a Radon measure on $\mathbb{T}$ such that

$$\langle R, \cos\rangle_{\mathcal{M}(\mathbb{T}),\mathscr{C}^0(\mathbb{T})} = 0 = \langle R, \sin\rangle_{\mathcal{M}(\mathbb{T}),\mathscr{C}^0(\mathbb{T})} = 0 \tag{14}$$

(we choose here to fix the origin at the Steiner point of the convex set K). Its associated support function h solves the ODE

$$\begin{cases} h + h'' = R & \text{in } \mathbb{T} \\ \int_0^{2\pi} h(\theta)e^{i\theta}\,d\theta = 0 \end{cases} \tag{15}$$

Let F be the associated resolvent operator, in other words,

$$F : \mathcal{R}_D \ni R \mapsto F[R] = h \in H^1(\mathbb{T}),$$

where h is the unique solution to System (15) and

$$\mathcal{R}_D = \left\{ R \in \mathcal{M}(\mathbb{T}) \mid \langle R, \cos + i \sin \rangle_{\mathcal{M}(\mathbb{T}), \mathscr{C}^0(\mathbb{T})} = 0 \text{ and } F[R](\theta) + F[R](\theta + \pi) \leqslant D,\ \theta \in \mathbb{T} \right\}.$$

In what follows and for the sake of notational simplicity, we will denote the quantity $\langle R, f \rangle_{\mathcal{M}(\mathbb{T}), \mathscr{C}^0(\mathbb{T})}$, where f is a continuous function in $\mathbb{T}$, by $\int_0^{2\pi} R(\theta) f(\theta)\, d\theta$ with a slight abuse.

We recall that the area of K is given by

$$|K| = J(R) \quad \text{where } J(R) = \int_0^{2\pi} F[R](\theta) R(\theta)\, d\theta. \tag{16}$$

Let R be the radius of curvature function of the optimal set K, and $h = F(R)$. Let I denote a subset of $(0, \pi)$ of positive measure (assumed to contain an interval without loss of generality since angular points are isolated) on which there holds $h(\theta) + h(\theta + \pi) = D$. According to Lemma 8, R is bounded on I, such that $R(\theta) + R(\theta + \pi) = D$ and $R \in \{0, D/2, D\}$ a.e. on I. Moreover, according to Lemma 9, the interiors of $I \cap \{R = 0\}$ and $I \cap \{R = D\}$ are empty.

We want to write the optimality conditions satisfied by R locally on the interval I. For that purpose we need to use admissible deformations: these are precisely deformations ξ belonging to the tangent cone at R, we recall this definition: *the tangent cone* to the set $L^\infty(I; [0, D])$ at R, (also called the *admissible cone*) denoted $\mathcal{T}_R$ is the set of functions $\xi \in L^\infty(I)$ such that, for any sequence of positive real numbers $(\eta_n)_{n \in \mathbb{N}}$ decreasing to 0, there exists a sequence of functions $\xi_n \in L^\infty(I)$ converging to ξ as $n \to +\infty$, and $R + \eta_n \xi_n \in L^\infty(I; [0, D])$ for every $n \in \mathbb{N}$.

Let us now give the first order optimality condition. This is a quite classical result in control theory, but for sake of completeness, we postpone the proof of the following Lemma to Appendix A.

Lemma 11. *There exist three real numbers (μ, α, β) (Lagrange multipliers), which are not all zero, such that the radius of curvature R of the optimal domain and its support function h satisfy*

$$\forall \xi \in \mathcal{T}_R, \quad \int_I \left(\mu(2h(\theta) - D) + \alpha \cos\theta + \beta \sin\theta \right) \xi(\theta)\, d\theta \leqslant 0. \tag{17}$$

To finish the proof of Lemma 10, let us introduce the switching function

$$\Psi_R : \theta \mapsto \mu(2h(\theta) - D) + \alpha \cos\theta + \beta \sin\theta,$$

where h is the solution to (15) associated to R. The first order necessary condition can be recast as

$$\forall \xi \in \mathcal{T}_R, \quad \int_I \Psi_R \xi \leqslant 0.$$

Let $y_0 \in I$ be a Lebesgue point of $I \cap \{R = 0\}$ and let $(G_n)_{n \in \mathbb{N}}$ denote a subset of $I \cap \{u^\star = 0\}$ containing y_0. Then, $\xi = \mathbb{1}_{G_n}$ belongs to $\mathcal{T}_R$ and therefore

$$\int_{G_n} \Psi_R \leqslant 0.$$

By dividing this inequality by $|G_n|$ and letting G_n shrink to y_0 as $n \to +\infty$, we infer that $\Psi_R(y_0) \leqslant 0$ according to the Lebesgue density theorem.

Generalizing this reasoning to the sets $I \cap \{R = D\}$ and $I \cap \{0 < R < D\}$, it follows that

- on $I \cap \{R = 0\}$, $\Psi_R \leqslant 0$;
- on $I \cap \{R = D\}$, $\Psi_R \geqslant 0$;
- on $I \cap \{0 < R < D\}$, $\Psi_R = 0$.

Note that Ψ_R is continuous. Let us distinguish between two cases. If $\mu = 0$, then $\Psi_R(\theta) = \alpha\cos\theta + \beta\sin\theta$ with $(\alpha,\beta) \neq (0,0)$ and then, $\{\Psi_R = 0\}$ has zero measure. It follows that R is bang-bang, equal to 0 and D almost everywhere in I. By continuity, since I contains an interval, one has either $R = 0$ or $R = D$ on an interval, which is in contradiction with Lemma 9. In the same way, if $\psi_R < 0$ (or $\psi_R > 0$) somewhere, it will remain negative (or positive) on an interval, implying that $R = 0$ on that interval, in contradiction with Lemma 9. Therefore, we deduce that ψ_R is identically zero which implies that

$$h = \frac{D}{2} + \frac{\alpha}{\mu}\cos + \frac{\beta}{\mu}\sin \quad \text{on } I.$$

The same identities hold true on $I+\pi$, which corresponds to an antipodal arc of circle. The expected result follows. Notice finally that, since angular points are isolated (which allowed us to assume that I contained an open interval), γ is the union of arcs of circle of diameter D. □

Another necessary point is to determine when ones switches from an arc of circle to another one.

Lemma 12. *Arc of circles only end at an angular point of the free boundary. Furthermore, the only angular points in the interior of the free boundary are the points M_i, $i = 1,2,3$.*

Proof. We have seen that a piece of γ whose points have a unique supporting line corresponds to an arc of a given circle with diameter D. All such points are represented by a unique angle. Hence, denoting by I the corresponding interval of angles, the relation $h(\cdot) + h(\cdot + \pi) = D$ holds true on I. It follows that an arc of circle breaks in the interior of γ if, and only if there exists an angular point M represented by an interval J_M on which the relation $h(\cdot) + h(\cdot + \pi) = D$ is not satisfied (otherwise we would necessarily have $R = D$ on J_M because of Lemma 8, which is impossible because of Lemma 10). Therefore, only an angular point can break an arc of circle and we claim that such a point is necessarily one of the points M_1, M_2, M_3. Indeed, let us write $J_M = [\alpha,\beta]$ with $\alpha \leqslant \beta$ and recall that for $\varepsilon > 0$ small enough, $\theta \in [\alpha-\varepsilon,\alpha]$ (and respectively $\theta \in [\beta,\beta+\varepsilon]$) is associated to a point on an arc of circle with diameter D. Let A (resp. B) be the points of $\partial K^\star$ corresponding by $\alpha+\pi$ (resp. $\beta+\pi$). If $A = B$, there are two pairs of arc of circle with same center, same radius meeting with a nonzero angle, which is impossible. Thus, one has $A \neq B$ and there is a point in the boundary between A and B which does not saturate the diameter constraint (otherwise, using the same arguments as above, there would exist an arc of circle of radius D between A and B). This point belongs necessarily to a contact line, which proves that J_M contains one of the angles $\eta_i + \pi$, $i = 1,2,3$. It follows that M corresponds to a point M_i, $i = 1,2,3$. □

According to Lemma 10 and Lemma 12, each free zone of γ is made of one or two arc of circles, and for each one, the antipodal arc of circle is in γ.

We end our study by distinguishing between two cases, depending on whether γ is made of two or three free zones.

3.2.2 Case of two free zones

First of all, let us remark that the case where the boundary contains only one free zone cannot occur. Indeed, it would mean that all the points in this free zone, that we know to be diametral, would be at the distance D of one vertex of the triangle. But this is impossible, according to Lemma 9. Thus, it remains to look at the case of two free zones. In that case, one of the vertices of the triangle belongs to the boundary $\partial K^\star$. Exactly for the same reason, it is impossible that one piece of the free boundary is diametral to this vertex. Therefore, the two remaining free zones that we denote Z_1 and Z_2 are mutually diametral, which means that for each M_1 in Z_1 there exists M_2 in Z_2 with $M_1M_2 = D$.

The case of two free zones arises whenever some points A_i and B_i on Fig. 10 coincide with a vertex S_i. According to Lemma 7, the contact point are the middle of the contact segments. Moreover,

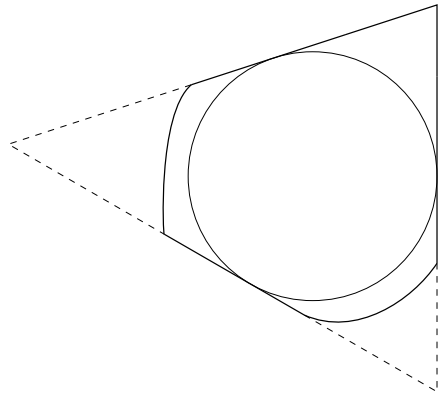

Figure 13: A convex set with two free zones

two segments have a vertex as endpoint, and it is necessary for the contact segment to be included in the edges of the triangle that this vertex is closer to the contact points than the other vertices. With the notations previously introduced (and summed-up on Fig. 10), we have $S_iI_j = \tan\varphi_i$ for $i \neq j$. Since we assumed that $0 < \varphi_1 \leqslant \varphi_2 \leqslant \varphi_3 < \pi/2$, the vertex is necessarily S_1 and one has $I_2A_2 = I_3B_3 = \tan\varphi_1$.

Assume hence without loss of generality that Z_1 contains A_1. Since A_1 is diametral, there exists $M \in Z_2$ such that $MA_1 = D$. We are going to prove that M is unique and equal to A_2. Assume by contradiction that it is not the case. Then there exists an angle $\theta \notin [\eta_2 - \alpha_2, \eta_2]$ representing M with $\theta + \pi \in [\eta_1 - \alpha_1, \eta_1]$ and $h(\theta) + h(\theta + \pi) = D$. Consider $\varepsilon > 0$ small such that $\eta_2 - \alpha_2 - \varepsilon > \theta$. Since the only angular point is a point M_i, every angle $\theta' \in]\eta_2 - \alpha_2 - \varepsilon, \eta_2 - \alpha_2[$ uniquely represents a point that is diametral. We deduce that for all $\theta' \in]\eta_2 - \alpha_2 - \varepsilon, \eta_2 - \alpha_2[$, $h(\theta') + h(\theta' + \pi) = D$. From the inequalities: $\theta + \pi \geqslant \eta_1 - \alpha_1$ and $\theta' > \theta$ we obtain that $\theta' + \pi \geqslant \eta_1 - \alpha_1$. The inequality $\eta_2 - \eta_1 < \pi$ guarantees that $\theta' + \pi \in [\eta_1 - \alpha_1, \eta_1]$, which means that every point represented by the angles $\theta' \in]\eta_2 - \alpha_2 - \varepsilon, \eta_2 - \alpha_2[$ are diametral to A_1, hence the existence of an arc of radius D, which is impossible.

Assume hence without loss of generality that Z_1 contains A_1. Since A_1 is diametral, there exists $M \in Z_2$ such that $MA_1 = D$. Assume by contradiction that A_2 is not diametral to A_1, hence there is a unique supporting line at M. Let θ be the angle associated to this support line. By uniqueness of the supporting line, one has necessarily $h(\theta) + h(\theta + \pi) = D$ with $\theta + \pi \in [\eta_1 - \alpha_1, \eta_1]$. Then, every point "above" M is represented by a unique angle $\theta' > \theta$ and we have $h(\theta') + h(\theta' + \pi) = D$ but $\theta' + \pi > \theta + \pi$, so the angle $\theta' + \pi$ also represents A_1. It shows that every point above M is diametral to A_1. In particular, A_1 and A_2 are diametral, whence the contradiction. Similarly, one shows that $B_3B_1 = D$.

Recall that the free zones are only made of arc of circles of diameter D. Let us show that each free zone is one arc of circle, that is antipodal to the other free zone. If it were not the case, one point M_i with $i = 2, 3$ would be in the interior of the free zone. Let us consider without loss of generality that M_3 belongs to the interior of the free boundary. Let N be a point of γ strictly between B_1 and M_3. Let θ be the corresponding angle of the associated supporting line, which is unique. Then, $\theta < \eta_3 + \pi$ and N is diametral with a point whose angles set of its supporting line(s) is included in (η_2, η_3). It is necessarily S_1. But this is impossible according to Lemma 9 since γ cannot contain an arc of circle of radius D whose center is a vertex of T.

Therefore, the free zones are antipodal arcs of circle of radius $D/2$. Since the points A_1, B_1, A_2, B_3 belong to the same circle and are two by two diametral, they are the vertices of a rectangle, meaning that T is an isosceles triangle (we use here the fact that the incircle and the rectangle share the same axis of symmetry). Taking the convention that $\eta_1 = -\pi/2$, we have $\eta_3 = \pi - \eta_2$ and $\varphi_1 = \pi/2 - \eta_2$ (see Fig 14).

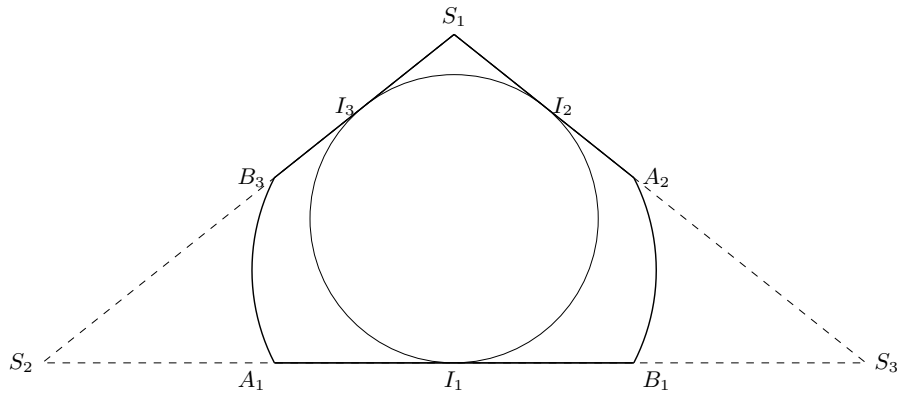

Figure 14: Picture of an admissible set with two free zones

Now let us compute the exact value of η_2 with respect to D. Since $\varphi_1 \leqslant \pi/3$, one has necessarily $\eta_2 \geqslant \pi/6$.

Let us consider the orthonormal basis $(O; \frac{\overrightarrow{A_1B_1}}{A_1B_1}, \frac{\overrightarrow{A_1B_3}}{A_1B_3})$ centered at O, the incircle center. Since the abscissa of A_1 is the same as the one of B_3 and since I_3 is the middle of $[S_1B_3]$ (and resp. I_2 is the middle of $[S_1A_2]$), we infer that the coordinates of A_1 and A_2 are then

$$A_1 = (-2\cos\eta_2, -1) \quad \text{and} \quad A_2 = \left(2\cos\eta_2, \frac{\cos(2\eta_2)}{\sin\eta_2}\right).$$

Solving the equation $A_1A_2 = D$ leads to the polynomial equation:

$$P(\sin\eta_2) = 0 \quad \text{with } P(X) = X^3 - \frac{D^2-1}{4}X^2 - \frac{1}{2}X + \frac{1}{4}. \tag{18}$$

We need to determine a solution in $[1/2, 1]$. Assume that $D > 2$. Let us observe that $P(1) = \frac{4-D^2}{4} < 0$ and $P(1/2) = \frac{3-D^2}{16} < 0$. Furthermore, one shows easily that P is either decreasing on $(1/2, 1)$ or decreasing and then increasing on $(1/2, 1)$. Thus the equation $P(\sin\eta_2) = 0$ has no solution on $[1/2, 1]$. We conclude that this is not possible to build an optimal set with two free zones.

3.2.3 Case of three free zones

Let us distinguish between two cases.

Subcase 1: all the points M_i, $i = 1, 2, 3$ belong to the interior of γ.

In this case, the previous study has shown that the free boundary is as follows (see Fig. 15)

- $\widehat{A_3M_1}$ and $\widehat{B_1M_3}$ are antipodal arcs of circle of radius $D/2$,
- $\widehat{A_2M_3}$ and $\widehat{B_3M_2}$ are antipodal arcs of circle of radius $D/2$,
- $\widehat{A_1M_2}$ and $\widehat{B_2M_1}$ are antipodal arcs of circle of radius $D/2$,
- I_i is on the middle of $[A_i, B_i]$
- M_i is on the perpendicular bisector of $[A_i, B_i]$ (or I_i, O and M_i are aligned).

We deduce the relationships

$$\overrightarrow{M_3B_1} = \overrightarrow{M_1A_3}, \quad \overrightarrow{M_1B_2} = \overrightarrow{M_2A_1}, \quad \text{and} \quad \overrightarrow{M_2B_3} = \overrightarrow{M_3A_2}. \tag{19}$$

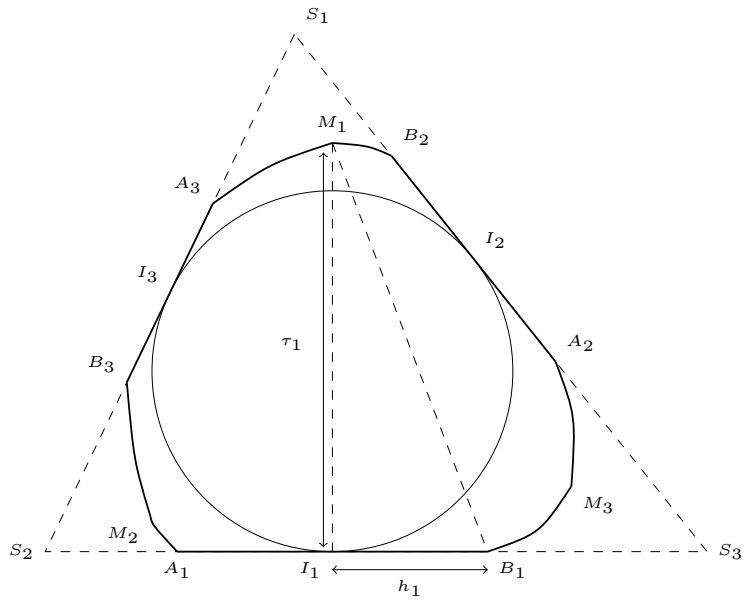

Figure 15: Case of three free zones and the M_i's belong to the interior of the free zones.

Let $\tau_i = M_iI_i$ and $h_i = I_iA_i$. Then necessarily $\tau_i > 2$ and we have the relationship

$$h_i = \sqrt{D^2 - \tau_i^2} \tag{20}$$

Let us consider the orthonormal basis $(O; \frac{\overrightarrow{I_1B_1}}{I_1B_1}, \frac{\overrightarrow{I_1O}}{I_1O})$ centered at O, the incircle center. For $i = 1, 2, 3$, the coordinates of A_i, B_i and M_i are

$$A_i = \begin{pmatrix} \cos\eta_i + h_i \sin\eta_i \\ \sin\eta_i - h_i\cos\eta_i \end{pmatrix}, \quad B_i = \begin{pmatrix} \cos\eta_i - h_i \sin\eta_i \\ \sin\eta_i + h_i\cos\eta_i \end{pmatrix}, \quad M_i = (1-\tau_i) \times \begin{pmatrix} \cos\eta_i \\ \sin\eta_i \end{pmatrix}.$$

By assimilating the index i with $i+3$, the vector relationships above rewrites

$$i = 1, 2, 3, \quad \begin{cases} 2 - \tau_i & = (2-\tau_{i+1})\cos(\eta_i - \eta_{i+1}) + h_{i+1}\sin(\eta_i - \eta_{i+1}) \\ h_i & = (2-\tau_{i+1})\sin(\eta_i - \eta_{i+1}) - h_{i+1}\cos(\eta_i - \eta_{i+1}), \end{cases} \tag{21}$$

from which we infer that

$$\begin{cases} (2-\tau_1)\tan(\eta_3 - \eta_2) & = h_1 \\ (2-\tau_2)\tan(\eta_1 - \eta_3) & = h_2 \\ (2-\tau_3)\tan(\eta_2 - \eta_1) & = h_3. \end{cases} \tag{22}$$

With the value of h_i given by (20), we have the quadratic equation on τ_1:

$$(2-\tau_1)^2\tan^2(\eta_3 - \eta_2) = D^2 - \tau_1^2. \tag{23}$$

and similarly for the others. This yields

$$2 - \tau_1 = 2\cos^2(\eta_3 - \eta_2) \pm \cos(\eta_3 - \eta_2)\sqrt{D^2 - 4\sin^2(\eta_3 - \eta_2)}. \tag{24}$$

Since $2 - \tau_1$ is negative, we can choose the sign depending on the value of cos. Recall that $\eta_{i+1} - \eta_i \in (0, \pi)$ and $\eta_3 - \eta_2 \leqslant \eta_1 - \eta_3 \leqslant \eta_2 - \eta_1$. Furthermore, $\eta_{i+1} - \eta_i \in (0, \pi/2)$ means that the triangle has an obtuse angle. This can happen only once, and for $\eta_3 - \eta_2$. So at least $\eta_1 - \eta_3$ and

$\eta_2 - \eta_1$ are in $(\pi/2, \pi)$ and their cosine is negative. Assuming now that we have $\eta_3 - \eta_2 > \pi/2$ leads to

$$\begin{cases} 2 - \tau_1 = 2\cos^2(\eta_3 - \eta_2) + \cos(\eta_3 - \eta_2)\sqrt{D^2 - 4\sin^2(\eta_3 - \eta_2)} \\ 2 - \tau_2 = 2\cos^2(\eta_1 - \eta_3) + \cos(\eta_1 - \eta_3)\sqrt{D^2 - 4\sin^2(\eta_1 - \eta_3)} \\ 2 - \tau_3 = 2\cos^2(\eta_2 - \eta_1) + \cos(\eta_2 - \eta_1)\sqrt{D^2 - 4\sin^2(\eta_2 - \eta_1)}. \end{cases} \tag{25}$$

By replacing h_i by its value (22) in (19), we obtain after calculation

$$\begin{cases} (2 - \tau_3)\cos(\eta_3 - \eta_2) &= (2 - \tau_1)\cos(\eta_1 - \eta_2) \\ (2 - \tau_2)\cos(\eta_2 - \eta_1) &= (2 - \tau_3)\cos(\eta_3 - \eta_1) \\ (2 - \tau_1)\cos(\eta_1 - \eta_3) &= (2 - \tau_2)\cos(\eta_2 - \eta_3). \end{cases} \tag{26}$$

Finally, replacing $2 - \tau_i$ by his expression in (26) and using that $\cos(\eta_{i+1} - \eta_i) \neq 0$, we get

$$\begin{cases} 2\cos(\eta_2 - \eta_1) + \sqrt{D^2 - 4\sin^2(\eta_2 - \eta_1)} &= 2\cos(\eta_3 - \eta_2) + \sqrt{D^2 - 4\sin^2(\eta_3 - \eta_2)} \\ 2\cos(\eta_2 - \eta_1) + \sqrt{D^2 - 4\sin^2(\eta_2 - \eta_1)} &= 2\cos(\eta_1 - \eta_3) + \sqrt{D^2 - 4\sin^2(\eta_1 - \eta_3)}. \end{cases} \tag{27}$$

Let $f : x \mapsto 2\cos x + \sqrt{D^2 - 4\sin^2 x}$. One easily shows that f is decreasing on $(\pi/2, \pi)$ and hence injective (see Fig. 16). We thus infer that

$$\eta_3 - \eta_2 = \eta_1 - \eta_3 = \eta_2 - \eta_1 = \frac{2\pi}{3}.$$

The triangle T is therefore equilateral and one has $\tau_1 = \tau_2 = \tau_3 = (3 + \sqrt{D^2 - 3})/2$. We recover the smoothed nonagon introduced in Def. 2.

Assume now that $\eta_3 - \eta_2 \leqslant \pi/2$. If $\eta_3 - \eta_2 = \pi/2$, then $\tau_1 = 2$ and M_1 is on in the incircle, which is impossible for $D > 2$, otherwise the arc of circle would cross the incircle.

Now we have

$$\begin{cases} 2 - \tau_1 = 2\cos^2(\eta_3 - \eta_2) - \cos(\eta_3 - \eta_2)\sqrt{D^2 - 4\sin^2(\eta_3 - \eta_2)} \\ 2 - \tau_2 = 2\cos^2(\eta_1 - \eta_3) + \cos(\eta_1 - \eta_3)\sqrt{D^2 - 4\sin^2(\eta_1 - \eta_3)} \\ 2 - \tau_3 = 2\cos^2(\eta_2 - \eta_1) + \cos(\eta_2 - \eta_1)\sqrt{D^2 - 4\sin^2(\eta_2 - \eta_1)}. \end{cases} \tag{28}$$

The same computations as above yield

$$2\cos(\eta_3 - \eta_2) - \sqrt{D^2 - 4\sin^2(\eta_3 - \eta_2)} = 2\cos(\eta_1 - \eta_3) + \sqrt{D^2 - 4\sin^2(\eta_1 - \eta_3)}. \tag{29}$$

Now, let us introduce $g : x \mapsto 2\cos x - \sqrt{D^2 - 4\sin^2 x}$. One easily sees that g is negative while f is positive and therefore, the equation $f(x) = g(y)$ has no solution. We conclude that this case cannot happen.

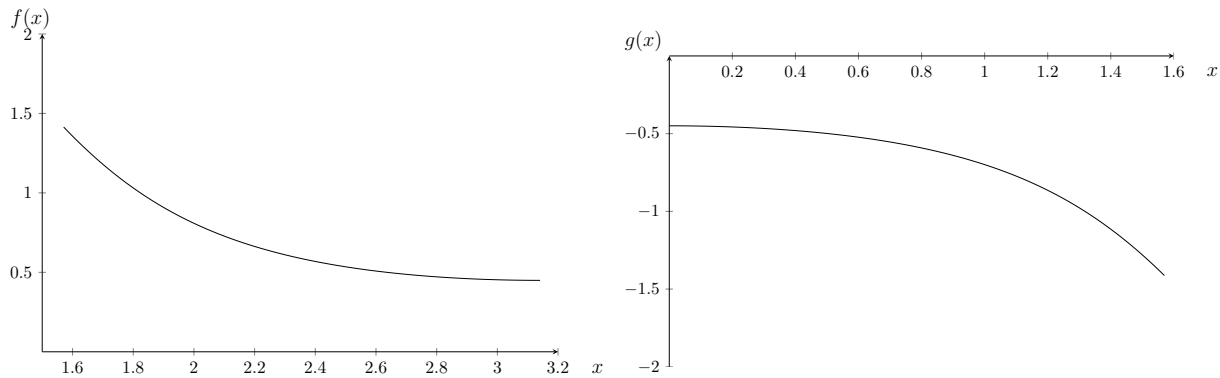

Figure 16: $D^2 = 6$. Left: plot of the function f. Right: plot of the function g.

Finally, the solution for this sub-case is $K_E(D)$ defined in Def. 2. Observe that since $K_E(D)$ is inscribed in the equilateral triangle, we need to have $h < \sqrt{3}$, ie $\tau < 3$ and $D < 2\sqrt{3}$, whence the requirement on D for the sake of the definition of $K_E(D)$.

Subcase 2: at least one point M_i is on the boundary of the free zone, namely it is one of the points A_j or B_j.

Assume here that a point M_i, say M_1 is not in the interior of the free zone. Then $M_1 = B_2$ or $M_1 = A_3$, say $M_1 = B_2$. The free zone Z_1 is an arc of circle of radius $D/2$ whose antipodal arc is $\widehat{B_1M_3}$. If M_3 is also on the boundary of Z_3 then Z_1 and Z_3 would be antipodal and Z_2 would not have any antipodal arc of circle. This is impossible. So M_3 lies in the interior of Z_3 and it has a second arc of circle: $\widehat{M_3A_2}$ which antipodal arc is $\widehat{M_2B_3}$. We claim that $M_2 = A_1$ otherwise $\widehat{M_2A_1}$ would not have antipodal arc.

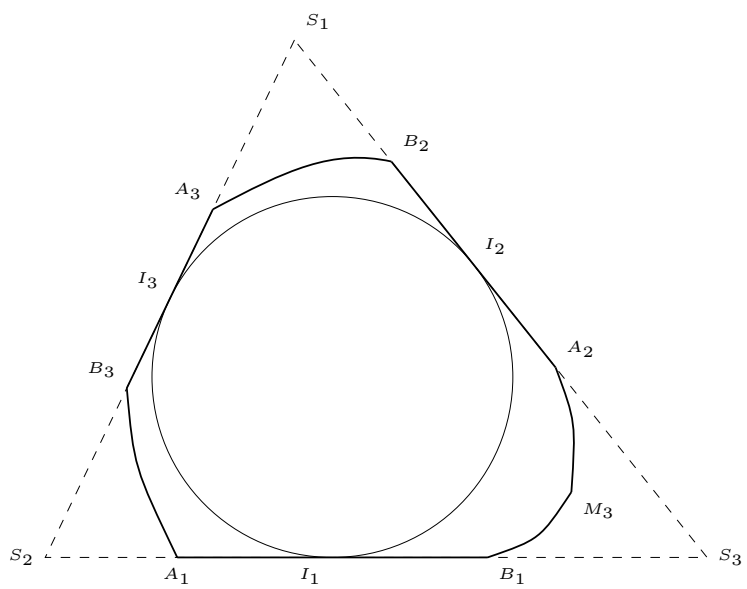

Figure 17: An approximate illustration of the case of three free zones and M_1 in the boundary of the free zone.

Now, in comparison with the first case, only two vector relation are valid, namely

$$\overrightarrow{B_1M_3} = \overrightarrow{A_3B_2} \quad \text{and} \quad \overrightarrow{A_2M_3} = \overrightarrow{B_3A_1}. \tag{30}$$

Taking the same notations as in the first case with $\tau = \tau_3$, one has

$$\begin{cases} \cos\eta_2 - h_2\sin\eta_2 - \cos\eta_3 - h_3\sin\eta_3 = (1-\tau)\cos\eta_3 - \cos\eta_1 + h_1\sin\eta_1 \\ \sin\eta_2 + h_2\cos\eta_2 - \sin\eta_3 + h_3\cos\eta_3 = (1-\tau)\sin\eta_3 - \sin\eta_1 - h_1\cos\eta_1 \end{cases} \tag{31}$$

and

$$\begin{cases} \cos\eta_1 + h_1\sin\eta_1 - \cos\eta_3 + h_3\sin\eta_3 = (1-\tau)\cos\eta_3 - \cos\eta_2 - h_2\sin\eta_2 \\ \sin\eta_2 - h_1\cos\eta_1 - \sin\eta_3 - h_3\cos\eta_3 = (1-\tau)\sin\eta_3 - \sin\eta_2 + h_2\cos\eta_2 \end{cases} \tag{32}$$

The same kind of computations as in the first case lead to the following statements:

$$\begin{cases} \eta_3 - \eta_2 = \eta_1 - \eta_3 = y \\ h_1 = h_2 \\ 2 - \tau = 2\cos y < 0 \\ \tau^2 + h_3^2 = D^2 \\ 2h_1 = -h_3\cos y. \end{cases} \tag{33}$$

Now set $\eta_3 = -\pi/2$. then $\eta_1 = y - \pi/2 \in [0, \pi/2]$ and $\eta_2 = \pi - \eta_1$. Observe that$A_2M_3A_1B_3$ is a rectangle which leads to the new equation $\overrightarrow{A_1M_3} \cdot \overrightarrow{A_2M_3} = 0$. It rewrites

$$(\tau - 1)^2 - 2(\tau - 1)\sin\eta_1 + (h_1^2 + 1)(2\sin^2\eta_1 - 1) = 0 \tag{34}$$

and using that

$$\sin\eta_1 = \tau/2 - 1 \quad \text{and} \quad h_1^2 + 1 = \frac{D^2 - \tau^2}{(\tau - 2)^2} + 1, \tag{35}$$

Equation (34) becomes

$$-\tau^3 + \left(D^2/2 + 5\right)\tau^2 - \left(2D^2 + 4\right)\tau + D^2 = 0. \tag{36}$$

Since τ has to be a root of the polynomial in $[2, 3]$, a calculus argument shows that for $D \in [2, 2\sqrt{3}]$, the polynomial has a unique root in $[2, 3]$, with $\tau(2) = 2$, $\tau(2\sqrt{3}) = 3$ and τ is an increasing function.

Finally this leads to the construction of the set $K_C(D)$ shown in Fig. 9.

Furthermore, if we set $t_1 = \arcsin\left(\frac{2(\sin\eta_1 + h_1\cos\eta_1) - \tau + 2}{D}\right)$ and $t_2 = \arcsin(\tau/D)$ then we have the formula

$$|K_C(D)| = \frac{\tau}{\tau - 2}\sqrt{D^2 - \tau^2} + \frac{D^2}{2}(t_2 - t_1). \tag{37}$$

Let us remark that, using (35), we have $\cos^2 t_2 = (D^2 - \tau^2)/D^2$ and $(\tau - 2)^2 = 4\sin^2\eta_1$, thus

$$h_1^2 = \frac{D^2 - \tau^2}{(\tau - 2)^2} = \frac{D^2\cos^2 t_2}{4\sin^2\eta_1} \Longrightarrow h_1 = \frac{D\cos t_2}{2\sin\eta_1},$$

and replacing in the definition of t_1, it provides the alternative formula

$$t_1 = \arcsin\left(\frac{\cos t_2}{\tan\eta_1}\right). \tag{38}$$

3.3 Comparison

Now we have to determine what is the optimal shape for a given D. Previous analysis show that for $D \geqslant 2\sqrt{3}$ it is not possible to construct the sets K_E and K_C. Hence the stadium K_S is optimal for such D. Let us have a look to the graphics of the area of the three domain for $D \in [2, 2\sqrt{3}]$. Now let us investigate the case $D \in [2, 2\sqrt{3}]$. Graphics 18 suggest that, the inradius r being prescribed, the set K_E is optimal for small values of D and K_S is optimal for large values of D. In the following we prove two facts:

1. The domain $K_C(D)$ is never optimal,
2. the existence of $D^\star$ such that for $D \leqslant D^\star$, $|K_E(D)| \geqslant |K_S(D)|$ and for $D \geqslant D^\star$, $|K_S(D)| \geqslant |K_E(D)|$.

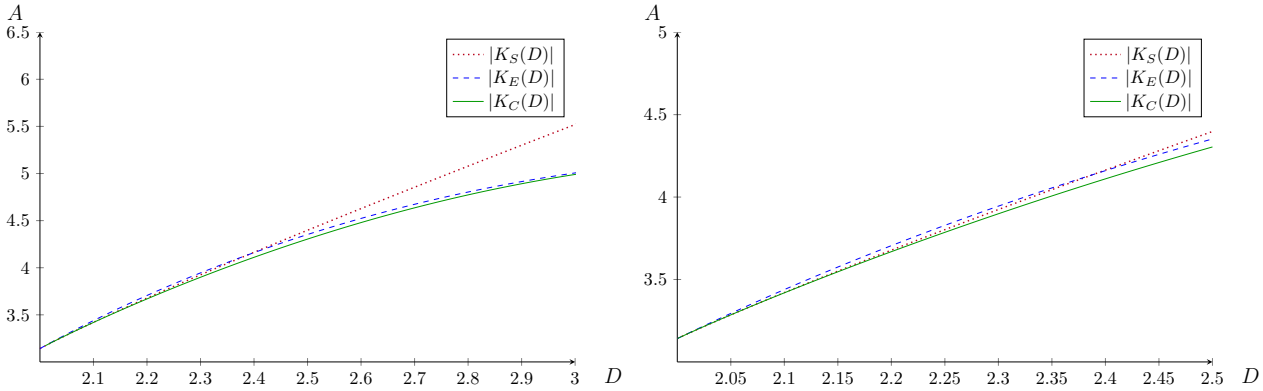

(a) $D \in (2, 2.5)$ (b) $D \in (2, 2.1)$

Figure 18: Comparison of the three areas

3.3.1 Proof that $K_C(D)$ is never optimal

We are going to prove that $K_C(D) < K_S(D)$ for $D \in (2, 2\sqrt{3}]$ by comparing their derivatives (we know that $K_C(2) = K_S(2) = \pi$). Let us write Equation (36) in the following way

$$D^2 = \tau \frac{\tau^2 - 5\tau + 4}{\frac{\tau^2}{2} - 2\tau + 1} := \tau g(\tau) \tag{39}$$

where the function $g : x \mapsto (x^2 - 5x + 4)/(x^2/2 - 2x + 1)$ is increasing. Thus we make the change of variable $D \to \tau$ and rewrite the areas $K_C(D)$ and $K_S(D)$ in terms of $\tau \in [2, 3]$. More precisely, we write $\tau = 2 + h$ with $h \in [0, 1]$ and we write all quantities in term of h. Let us observe that

$$g(2 + h) = 2 + \frac{h}{1 - h^2/2}. \tag{40}$$

We start with $K_C(D)$ given by (37). By (40)

$$D^2 - \tau^2 = (2 + h)g(2 + h) - (2 + h)^2 = h^2 \frac{h + h^2/2}{1 - h^2/2}$$

and then the first term of $K_C(D)$ is

$$\frac{\tau}{\tau - 2}\sqrt{D^2 - \tau^2} = (2 + h)\sqrt{\frac{h + h^2/2}{1 - h^2/2}}. \tag{41}$$

A simple computation gives its derivative with respect to h:

$$\frac{d}{dh}\left(\frac{\tau}{\tau - 2}\sqrt{D^2 - \tau^2}\right) = \sqrt{\frac{2 + h}{2h(1 - h^2/2)}}\frac{1 + 2h + h^2/2 - h^3/2}{1 - h^2/2}. \tag{42}$$

Now we look at the other term in $K_C(D)$:

$$t_2 = \arcsin\left(\sqrt{\frac{\tau}{g(\tau)}}\right) = \arcsin\left(\sqrt{\frac{2 + h - h^2 - h^3/2}{2 + h - h^2}}\right). \tag{43}$$

Now, let us express t_1 using (38):

$$\cos t_2 = \sqrt{1 - \frac{\tau^2}{D^2}} = \sqrt{1 - \frac{2 + h}{g(2 + h)}} = h\sqrt{\frac{h/2}{2 + h - h^2}}$$

while , from $\sin\eta_1 = h/2$, we get

$$\tan\eta_1 = \sqrt{\frac{1}{1-\sin^2\eta_1} - 1} = \frac{h}{4-h^2}.$$

From this, we infer:

$$t_1 = \arcsin\left(\sqrt{\frac{h(2+h)}{2(1+h)}}\right). \tag{44}$$

Now using the formula $\arcsin b - \arcsin a = \arcsin\left(b\sqrt{1-a^2} - a\sqrt{1-b^2}\right)$ (all numbers a and b are between 0 and 1), we finally get thanks to (43) and (44):

$$t_2 - t_1 = \arcsin\left((1-h)\sqrt{\frac{2+h}{2-h}}\right). \tag{45}$$

In particular, we have

$$\frac{d}{dh}(t_2 - t_1) = \frac{h^2 - 2h - 2}{(2-h)\sqrt{2h(2+h)(1-h^2/2)}}.$$

Thus, one has

$$\frac{D^2}{2}\frac{d}{dh}(t_2 - t_1) = \frac{(1+h)(2-h)(2+h)}{2(1-h^2/2)}\frac{h^2-2h-2}{(2-h)\sqrt{2h(2+h)(1-h^2/2)}} =$$

$$= \sqrt{\frac{2+h}{2h(1-h^2/2)}}\frac{-1-2h-h^2/2+h^3/2}{1-h^2/2}$$

which is exactly the opposite of (42). Therefore

$$\frac{d}{dh}K_C(2+h) = D\frac{dD}{dh}\arcsin\left((1-h)\sqrt{\frac{2+h}{2-h}}\right).$$

On the other hand, since

$$\frac{d}{dD}K_S(D) = D\arcsin\left(\frac{2}{D}\right)$$

we have

$$\frac{d}{dh}K_S(2+h) = D\frac{dD}{dh}\arcsin\left(\frac{2}{D}\right)$$

and to compare the derivatives, it suffices to compare the arguments in the arcsin. Now

$$\frac{2}{D} = \sqrt{\frac{2(1-h^2/2)}{(1+h)(2-h)(2+h)}}$$

and squaring and simplifying amounts to prove

$$\frac{4(1-h^2/2)}{(1+h)(2+h)} > (1-h)^2(2+h) \Leftrightarrow h^2(5+h-3h^2-h^3) > 0$$

which is true for $0 < h \leqslant 1$. This finishes the proof of $K_S(D) > K_C(D)$ for $D > 2$.

3.3.2 Existence of $D^\star$

Note that $|K_S(2)| = |K_E(2)| = \pi$. Now we compute the derivative of $D \mapsto |K_E(D)| - |K_S(D)|$ which is given by

$$\frac{d}{dD}(|K_E(D)| - |K_S(D)|) = \frac{3}{2} \times D\left(\frac{2\pi}{3} - 2\arccos(\frac{\sqrt{3}}{D})\right) - D\arcsin\left(\frac{2}{D}\right),$$

which has the same sign as $\pi - 3\arccos(\frac{\sqrt{3}}{D})) - \arcsin(2/D) = g(D)$.

Now, we have

$$g'(D) = -\frac{3\sqrt{3}}{D\sqrt{D^2-3}} + \frac{2}{D\sqrt{D^2-4}}$$

which is positive if and only if $D \in [2, \sqrt{\frac{96}{23}}]$. Together with $g(0) = 0$ and $g(2\sqrt{3}) = -\arcsin(\frac{1}{\sqrt{3}}) < 0$ we get that g is positive then negative. Finally we deduce that $D \mapsto |K_E(D)| - |K_S(D)|$ is increasing then decreasing with value 0 at 2 and taking negative value at $2\sqrt{3}$. We finally get the existence of some $D^\star \in [2, 2\sqrt{3}]$ such that for $D \leqslant D^\star$, $|K_E(D)| \geqslant |K_S(D)|$ and for $D \geqslant D^\star$, $|K_E(D)| \leqslant |K_S(D)|$. This conclude the proof.

A Proof of Lemma 11

To prove the Lemma, we will introduce an auxiliary problem whose unknown is the restriction of R to the set I. Let us introduce $J = [0, 2\pi]\backslash(I \cup (I+\pi))$. Let us decompose R as $R = R_0\mathbb{1}_J + u^\star\mathbb{1}_I + (D - u^\star(\cdot - \pi))\mathbb{1}_{I+\pi}$, and observe that

$$J(R) = \int_I (2F[R]u^\star - DF[R] - Du^\star + D^2) + \int_J F[R]R_0.$$

and

$$\int_I u^\star(\theta)\cos\theta\, d\theta = \alpha \quad \text{and} \quad \int_I u^\star(\theta)\sin\theta\, d\theta = \beta,$$

with $\alpha = -\frac{1}{2}\int_J R_0(\theta)\cos\theta\, d\theta + \frac{D}{2}\int_I \cos\theta\, d\theta$ and $\beta = -\frac{1}{2}\int_J R_0(\theta)\sin\theta\, d\theta + \frac{D}{2}\int_I \sin\theta\, d\theta$.

We will now characterize $u^\star$ by exploiting that it solves the optimization problem

$$\sup_{u\in\widetilde{\mathcal{R}}_D} \widetilde{J}(u) \quad \text{where} \quad \widetilde{J}(u) = \int_I (2hu - Dh - Du + D^2) + \int_J hR_0, \tag{46}$$

where h solves the ODE

$$\begin{cases} h + h'' = R_0\mathbb{1}_J + u\mathbb{1}_I + (D - u(\cdot - \pi))\mathbb{1}_{I+\pi} & \text{in } (0, 2\pi) \\ \int_0^{2\pi} h(\theta)e^{i\theta}\, d\theta = 0 \\ h(0) = h(2\pi),\ h'(0) = h'(2\pi) \end{cases} \tag{47}$$

and

$$\widetilde{\mathcal{R}}_D = \left\{u \in L^\infty(I; [0, D]) \mid \int_I u(\theta)e^{i\theta}\, d\theta = \alpha + i\beta\right\}.$$

Let us now derive the first order necessary optimality conditions for this problem. Since the method is standard, we briefly comment on the method allowing us to write such conditions: first, the mapping $\widetilde{\mathcal{R}}_D \ni u \mapsto h$, where h solves (47), being linear it is Gâteaux-differentiable at $u^\star$ in every direction ξ belonging to the tangent cone to the set $\widetilde{\mathcal{R}}_D$ at $u^\star$. Furthermore, its differential $\dot{h}$ is the unique solution of the ODE

$$\begin{cases} \dot{h} + \dot{h}'' = \xi\mathbb{1}_I - \xi(\cdot - \pi)\mathbb{1}_{I+\pi} & \text{in } (0, 2\pi) \\ \int_0^{2\pi} \dot{h}(\theta)e^{i\theta}\, d\theta = 0 \\ \dot{h}(0) = \dot{h}(2\pi),\ \dot{h}'(0) = \dot{h}'(2\pi). \end{cases}$$

It follows that $\widetilde{\mathcal{R}}_D \ni u \mapsto \widetilde{J}(u)$ is Gâteaux-differentiable at $u^\star$ and its differential reads

$$\begin{aligned}\langle d\widetilde{J}(u^\star), \xi\rangle &= \lim_{\eta \searrow 0} \frac{\widetilde{J}(u^\star + \eta\xi) - \widetilde{J}(u^\star)}{\eta} = \int_I (2\dot{h}u^\star + 2h\xi - D\dot{h} - D\xi) + \int_J \dot{h}R_0 \\ &= \int_I (2h - D)\xi + \int_I \dot{h}(2u^\star - D) + \int_J \dot{h}R_0 = 2\int_I (2h - D)\xi,\end{aligned}$$

by using several times integration by parts and the relation $h(\theta) + h(\theta + \pi) = D$ on I.

We now have to deal with two kinds of constraints in $\widetilde{\mathcal{R}}_D$: a global L^1 one and point-wise ones, since u belongs to $[0, D]$ almost everywhere. Although such constraints are standard, we briefly explain how to derive the Euler inequation for this problem with the help of a penalization approach, for the sake of completeness. For $\varepsilon > 0$, let us introduce $\widetilde{J}_\varepsilon$ as the penalized functional

$$\widetilde{J}_\varepsilon(u) = \widetilde{J}(u) + \frac{1}{\varepsilon}\left|\int_I u(\theta)e^{i\theta}\, d\theta - (\alpha + i\beta)\right|^2.$$

We consider the optimization problem

$$\sup_{u \in L^\infty(I;[0,D])} \widetilde{J}_\varepsilon(u). \tag{48}$$

On what follows, we will need to consider an element ξ to the tangent cone $\mathcal{T}_u$ to $L^\infty(I; [0, D])$ at u, that we describe hereafter.

Since they follow from a basic variational analysis, we do not provide all the details to the following claims:

- Since $L^\infty(I; [0, D])$ is compact for the weak-star convergence in L^∞, the resolvent operator $\widetilde{\mathcal{R}}_D \ni u \mapsto h \in L^2(\mathbb{T})$ is compact and therefore, the penalized problem (48) has a solution $u_\varepsilon \in L^\infty(I; [0, D])$.
- Let h_ε be the solution to (47) associated to u_ε. There exists a sequence $(\varepsilon_n)_{n\in\mathbb{N}}$ decreasing to 0, there exists $\widetilde{u} \in L^\infty(I; [0, D])$ such that $(u_{\varepsilon_n})_{n\in\mathbb{N}}$ converges weakly-star to $\widetilde{u}$ in $L^\infty(I; [0, D])$ and $(h_{\varepsilon_n})_{n\in\mathbb{N}}$ converges strongly to $\widetilde{h} \in H^1(0, 2\pi)$ and uniformly in $\mathscr{C}^0([0, 2\pi])$ as $n \to +\infty$. Furthermore, one has necessarily $\int_I u_{\varepsilon_n}(\theta)e^{i\theta}\, d\theta = \alpha + i\beta) + \mathrm{O}(\varepsilon_n)$ and therefore, $\widetilde{u}$ belongs to $\widetilde{\mathcal{R}}_D$.
- Let $\xi \in \mathcal{T}_{\widetilde{u}}$. There exists $\xi_n \in \mathcal{T}_{u_{\varepsilon_n}}$ such that $(\xi_n)_{n\in\mathbb{N}}$ converges weakly-star to ξ as $n \to +\infty$ (this follows from the definition of the tangent cone and the fact that pointwise inequalities are preserved by the weak-star convergence).

Let $\xi \in \mathcal{T}_{\widetilde{u}}$. According to the computations above, the necessary first order optimality conditions for the penalized problem (48) read: for every $n \in \mathbb{N}$, since $\xi \in \mathcal{T}_{u_{\varepsilon_n}}$, one has

$$\int_I (2h_{\varepsilon_n}(\theta) - D + \alpha_n \cos\theta + \beta_n \sin\theta)\, \xi_n(\theta)\, d\theta \leqslant 0,$$

where

$$\alpha_n = \frac{1}{\varepsilon_n}\left(\int_I u_{\varepsilon_n}(s)\cos s\, ds - \alpha\right) \quad \text{and} \quad \beta_n = \frac{1}{\varepsilon}\left(\int_I u_{\varepsilon_n}(s)\sin s\, ds - \beta\right).$$

Let us divide the inequality above by $\sqrt{1 + \alpha_n^2 + \beta_n^2}$. Since the quantities $\sqrt{1 + \alpha_n^2 + \beta_n^2}$, $\alpha_n/\sqrt{1 + \alpha_n^2 + \beta_n^2}$ and $\beta_n/\sqrt{1 + \alpha_n^2 + \beta_n^2}$ are uniformly bounded with respect to n, one can assume that they respectively converge (up to a new extraction) to $\mu \geqslant 0$, $\bar{\alpha} \in \mathbb{R}$ and $\bar{\beta} \in \mathbb{R}$ such that $(\mu, \bar{\alpha}, \bar{\beta}) \neq (0, 0, 0)$. Since ξ was arbitrarily chosen, by passing to the limit as $n \to +\infty$, we get at the end that the first order necessary conditions associated to Problem (47) read

$$x\forall \xi \in \mathcal{T}_{\widetilde{u}}, \quad \int_I \left(\mu(2\widetilde{h}(\theta) - D) + \bar{\alpha}\cos\theta + \bar{\beta}\sin\theta\right)\xi(\theta)\, d\theta \leqslant 0. \tag{49}$$

Now, since $\widetilde{J}_{\varepsilon_n}(u) = \widetilde{J}(u)$ for every $u \in \widetilde{\mathcal{R}}_D$, it follows that

$$\widetilde{J}_{\varepsilon_n}(u_\varepsilon) = \max_{u \in L^\infty(I;[0,D])} \widetilde{J}_{\varepsilon_n}(u) \geqslant \max_{u \in L^\infty(I;[0,D])} \widetilde{J}(u) = \widetilde{J}(u^\star) \geqslant \widetilde{J}(u_{\varepsilon_n}).$$

Passing to the limit in this inequality yields $\widetilde{J}(u^\star) \geqslant \widetilde{J}(\widetilde{u})$. Using that $\widetilde{u}$ belongs to $\widetilde{\mathcal{R}}_D$, we infer that $\widetilde{u}$ solves Problem (46). Therefore, we can assume without loss of generality that $\widetilde{u} = u^\star$.

Acknowledgements

We want to thank warmly the anonymous referee who allows us to improve the writing and clarity of this paper. All three authors were partially supported by the ANR Project ANR-18-CE40-0013 SHAPO "SHAPe Optimization". The third author was partially supported by the Project "Analysis and simulation of optimal shapes - application to lifesciences" of the Paris City Hall.

References

[1] M. Belloni and E. Oudet. The minimal gap between $\Lambda_2(\Omega)$ and $\Lambda_\infty(\Omega)$ in a class of convex domains. *J. Convex Anal.*, 15(3):507–521, 2008.

[2] W. Blaschke. Konvexe Bereiche gegebener konstanter Breite und kleinsten Inhalts. *Math. Ann.*, 76:504–513, 1915.

[3] W. Blaschke. Eine Frage über konvexe Körper. *Jahresber. Dtsch. Math.-Ver.*, 25:121–125, 1916.

[4] T. Bonnesen and W. Fenchel. *Theory of convex bodies.* BCS Associates, Moscow, ID, 1987. Translated from the German and edited by L. Boron, C. Christenson and B. Smith.

[5] K. Böröczky, Jr., M. A. Hernández Cifre, and G. Salinas. Optimizing area and perimeter of convex sets for fixed circumradius and inradius. *Monatsh. Math.*, 138(2):95–110, 2003.

[6] R. Brandenberg and B. González Merino. A complete 3-dimensional Blaschke-Santaló diagram. *Math. Inequal. Appl.*, 20(2):301–348, 2017.

[7] A. Delyon, A. Henrot, and Y. Privat. Nondispersal and density properties of infinite packings. *SIAM J. Control Optim.*, 57(2):1467–1492, 2019.

[8] M. Henk and G. A. Tsintsifas. Some inequalities for planar convex figures. *Elem. Math.*, 49(3):120–125, 1994.

[9] A. Henrot and M. Pierre. *Shape Variation and Optimization*, volume 28 of *Tracts in Mathematics.* European Mathematical Society, Zürich, 2018.

[10] M. A. Hernández Cifre. Is there a planar convex set with given width, diameter, and inradius? *Amer. Math. Monthly*, 107(10):893–900, 2000.

[11] M. A. Hernández Cifre. Optimizing the perimeter and the area of convex sets with fixed diameter and circumradius. *Arch. Math. (Basel)*, 79(2):147–157, 2002.

[12] M. A. Hernández Cifre and G. Salinas. Some optimization problems for planar convex figures. *Rend. Circ. Mat. Palermo (2) Suppl.*, (70, part I):395–405, 2002. IV International Conference in "Stochastic Geometry, Convex Bodies, Empirical Measures & Applications to Engineering Science", Vol. I (Tropea, 2001).

[13] M. A. Hernández Cifre and S. Segura Gomis. The missing boundaries of the Santaló diagrams for the cases (d, ω, R) and (ω, R, r). *Discrete Comput. Geom.*, 23(3):381–388, 2000.

[14] I. M. Jaglom and V. G. Boltjanskiĭ. *Convex figures*. Translated by Paul J. Kelly and Lewis F. Walton. Holt, Rinehart and Winston, New York, 1960.

[15] L. A. Santaló. On complete systems of inequalities between elements of a plane convex figure. *Math. Notae*, 17:82–104, 1959/61.

[16] R. Schneider. *Convex bodies: the Brunn-Minkowski theory*, volume 151 of *Encyclopedia of Mathematics and its Applications*. Cambridge University Press, Cambridge, expanded edition, 2014.

[17] P. R. Scott and P. W. Awyong. Inequalities for convex sets. *JIPAM. J. Inequal. Pure Appl. Math.*, 1(1):Article 6, 6, 2000.

[18] Y. Yang and D. Zhang. Two optimisation problems for convex bodies. *Bull. Aust. Math. Soc.*, 93(1):137–145, 2016.