HAL open science

Bond Graph Modeling of an Electro-Hydrostatic Actuator for Aeronautic Applications

Olivier Langlois, Xavier Roboam, Jean-Charles Maré, Hubert Piquet, Grace Gandanegara

To cite this version:

Olivier Langlois, Xavier Roboam, Jean-Charles Maré, Hubert Piquet, Grace Gandanegara. Bond Graph Modeling of an Electro-Hydrostatic Actuator for Aeronautic Applications. 17th IMACS World Congress, Jul 2005, Paris, France. hal-02517142

HAL Id: hal-02517142

https://hal.science/hal-02517142v1

Submitted on 24 Mar 2020

HAL is a multi-disciplinary open access archive for the deposit and dissemination of scientific research documents, whether they are published or not. The documents may come from teaching and research institutions in France or abroad, or from public or private research centers.

L'archive ouverte pluridisciplinaire **HAL**, est destinée au dépôt et à la diffusion de documents scientifiques de niveau recherche, publiés ou non, émanant des établissements d'enseignement et de recherche français ou étrangers, des laboratoires publics ou privés.

Bond Graph Modeling of an Electro-Hydrostatic Actuator for Aeronautic Applications

O. Langlois*, X. Roboam, J.-C. Maré***, H. Piquet**, G. Gandanegara****
* Airbus France, Engineering Electrical Systems Department,
316 route de Bayonne, PO Box M0131/5, 31060 Toulouse Cedex 03, France
** LEEI, UMR CNRS – INPT/ENSEEIHT N°5828,
2 rue Camichel, BP 7122, 31071 Toulouse Cedex 7, France
*** LGMT, INSA Toulouse, 135 avenue de Rangueil, 31077 Toulouse Cedex 4, France

Abstract - Electrical actuators are arriving onboard aircrafts. At the same time, computer simulations are more and more used to realize pre-studies concerning systems on board aircrafts. In this context, actuator models are needed. The objective of this paper is to present how an actuator can be modeled with the Bond Graph method. A complete Electro-Hydrostatic Actuator is modeled, from the electrical power supply to the flight control surface. To perform electrical network simulations, Saber software is greatly used in aeronautic. The Bond Graph model is therefore translated into an equivalent electrical circuit to use it directly on Saber. A validation is achieved with a reference model. Due to the adaptability of a Bond Graph design, the actuator model's accuracy can be easily fixed to the desired level.

Keywords: Aeronautic, Electro-Hydrostatic Actuator, Bond Graph, Multi-domain application, Flight control surface

I. INTRODUCTION

Electricity currently takes a prime importance in aeronautic systems with the so called 'more electric aircraft'. In this framework, more and more electrical actuators are coming aboard aircrafts. In particular, they become often used for actuating flight control surfaces [BOS, 03]. From the power distribution's point of view, a flight control actuator is a dynamic load with fluctuant power consumption, which has to impose an accurate position control while pushing heavy loads (several tons) at low speeds. In this way, the electrical network can be disturbed by strong spikes of the electrical power demand.

System oriented modeling and computer simulations can therefore be helpful for designers in order to improve and optimize electrical network architectures in terms of:

- impact on electrical network quality and stability,
- sizing of electrical sources (generators and cables) and system equipment.

The main class of electrical actuators for flight control surfaces is constituted of Electro-Hydrostatic Actuators (EHA). The structure of such actuators involves several physical domains that are coupled from the electrical input (connected to the electrical network) to the output (mechanical flight control surface) (see Fig. 1) [HAB, 99]. First, electricity is converted to rotational mechanic with a synchronous motor. Then, a volumetric pump transforms mechanical power into hydraulic power. A hydraulic jack is in charge of transforming hydraulic to translation mechanic. Finally, the rod translation drives the rotation of the flight control surface. Therefore, many different transformations and field crossings are involved in EHAs. That is a reason why Bond Graph is particularly convenient to represent this actuator [PAY, 61], [KAR, 00]. All physical domains can be drawn on the same design, with the same schematic elements, which greatly facilitates the system's analysis.

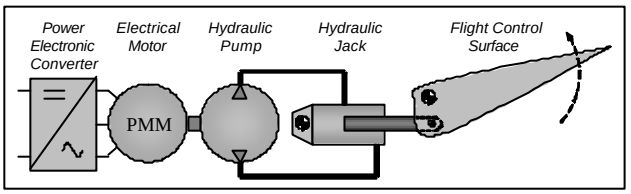

Fig. 1. General synoptic diagram of an EHA + flight control surface

In this paper, the whole system involving "EHA and flight control" has to be studied and implemented in Bond Graph.

First, the Bond Graph of the system is described, including the position control of the surface. Then, a validation process of the Bond graph model is proposed relatively to the model supplied by the EHA supplier. In particular, a procedure to transfer the multi field Bond Graph into the Saber solver is described. Saber is actually one of the main standards in electrical engineering system simulation and also in the field of aeronautic embedded systems. Finally, some system analyses are presented in the framework of the driving mission of the flight control surface actuator.

II. NOMENCLATURE

A. Power variables (effort, flow)

U_{bus}	DC bus voltage	(V)
I_{bus}	DC bus current	(A)
U_{cvs}	"Internal" converter voltage	(V)

I	DC motor current	(A)
U	DC motor voltage	(V)
E	DC motor electromotive force	(V)
Γ_{em}	Motor-pump electromagnetic torque	(N·m)
Ω	Motor-pump rotational speed	(rad/s)
Γ	Motor-pump mechanical torque	(N·m)
Γ_p	Pump "internal" torque (= $\Gamma_{p1} - \Gamma_{p2}$)	(N·m)
ΔP_p	Pump output pressure (= $P_{p1} - P_{p2}$)	(Pa)
Q_{lp}	Pump internal leakage flow	(m^3/s)
$Q_{p1,2}$	Pump output flows (side 1 or 2)	(m^3/s)
P_{accu}	Accumulator pressure	(Pa)
Q_{accu}	Accumulator flow	(m^3/s)
$Q_{l1,2}$	Line flows (side 1 or 2)	(m^3/s)
ΔP_j	Jack input pressure (= $P_{j1} - P_{j2}$)	(Pa)
Q_{lj}	Jack internal leakage flow	(m^3/s)
Q_j	Jack "internal" flow	(m^3/s)
F_j'	Jack "internal" force (= $F_{j1}' - F_{j2}'$)	(N)
F_j	Jack output force	(N)
V_j	Jack output velocity	(m/s)
$F_{dry\,j}$	Jack dry friction force	(N)
V_T	Transmission velocity	(m/s)
M_T	Transmission hinge momentum	(N·m)
M_J	Flight control inertia hinge momentum	(N·m)
M_{FC}	Flight control hinge momentum	(N·m)
Ω_{FC}	Flight control rotational velocity	(rad/s)

B. Other variables

a	Converter duty cycle	(-)
x	Jack rod position	(m)

C. Parameters

R_{he}	Converter internal resistance (elec. efficiency)	(Ω)
L	DC Motor inductance	(H)
R	DC Motor resistance	(Ω)
Φ	DC Motor electromagnetic flux	(Wb)
J_{mp}	Motor-pump inertia momentum	(kg·m^2)
f_{mp}	Motor-pump viscous friction coefficient	(N·m·s)
D	Pump displacement	(m^3)
f_{hm}	Pump additional friction (mec. efficiency)	(N·m·s)
$R_{hp1,2}$	Pump hydraulic stiffness (side 1 or 2)	(Pa/m^3)
C_{lp}	Pump internal leakage resistance	(Pa·s/m^3)
C_{valve}	Re-feeding valve resistance	(Pa·s/m^3)
C_{sat}	Overpressure system resistance	(Pa·s/m^3)
$C_{l1,2}$	Line (1 or 2) resistance	(√Pa·s/m^3)
$R_{hj1,2}$	Jack hydraulic stiffness (side 1, or 2)	(Pa/m^3)
$V_{t1,2}$	Jack piston chamber (1 or 2) volume	(m^3)
b	Fluid bulk modulus	(Pa)
$C_{hj1,2}$	Jack "dissipation" resistance (side 1 or 2)	(Pa·s/m^3)
S	Jack piston active area	(m^3)
C_{lj}	Jack internal leakage resistance	(Pa·s/m^3)
M_j	Jack rod mass	(kg)
R_{mj}	Jack mechanic stiffness	(N/m)
C_{mj}	Jack structural damping resistance	(N·s/m)
la	Lever arm	(m)
J	Flight control inertia momentum	(kg·m^2)

III. BOND GRAPH MODELING OF THE EHA

Each sub-system constituting the EHA can be separately modeled.

A. Electrical part

In the proposed study, a simplifying hypothesis is that the EHA is supplied with a constant DC voltage source. In practice, this latter is obtained with a DC network, or a 6-pulse rectifier associated to an AC network, associated in both cases to a DC filter. Anyway, the proposed Bond Graph modeling is perfectly convenient to be inserted in a complete network.

Furthermore, to simplify the study, the considered electrical motor is an "equivalent DC motor": actually a 3-phase permanent magnet motor is generally used in EHAs. In fact, the DC motor has the same power balance and transient behavior as the actual synchronous motor (see Fig. 2).

Thus, the electronic converter is reduced to a DC-DC step-down converter. The switching cell of the chopper is globally modeled in Bond Graph by a Modulated TransFormer ("MTF") element. If the high frequency behavior of the electrical part is required, the signal that modulates this MTF can be a Boolean variable which sets the state of the switching cell (ON or OFF). However, if the switching frequency is far from the fastest electrical modes, an average model based on the duty cycle (a) can be used, which greatly reduces the computation time. Conduction losses are taken into account with a dissipative "R" element (R_{he}) on a "1" junction (constant flow, i.e. current). An estimate of the switching losses can also be done and affected to this resistance (see Fig. 3).

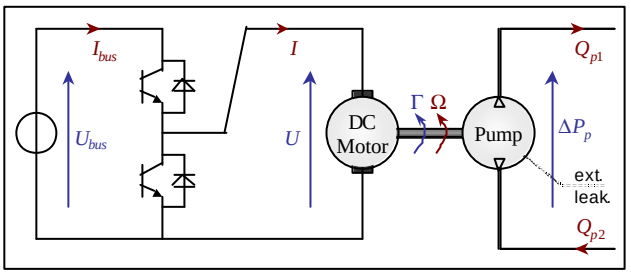

Fig. 2. Equivalent DC-DC converter, DC motor and hydraulic pump

The DC equivalent motor is simply modeled by a gyrator "GY" element for the electromechanical conversion, with a ratio equal to the electromagnetic flux (Φ). On the electrical side, armature inductance and resistance are transcribed in Bond Graph respectively with "I" and "R" elements (L and

R). That is the same on the mechanical side, for inertia momentum and viscous friction coefficients (respectively J_{mp} and f_{mp}).

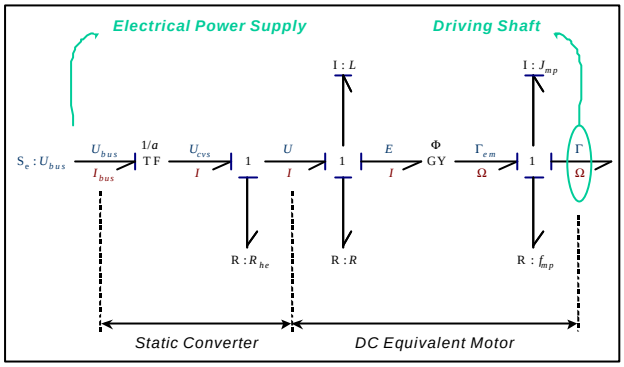

Fig. 3. Bond Graph of the converter and the electrical motor

An actual 3-phase voltage source inverter fed synchronous machine can easily be replaced and modeled with Bond Graphs, leading to equivalent energetic results.

B. Hydraulic pump

The equivalent inertia and friction of the mobile parts are modeled by I and R elements. That is why they are grouped together with those of the motor: J_{mp} and f_{mp}. These elements are also represented on the Bond Graph of the pump (see Fig. 4).

The core of the hydraulic pump is made of two "TF" elements with a transformer ratio equal to the pump volumetric displacement (D). Internal hydraulic leakages are modeled by a "R" element placed between the two hydraulic lines (C_{lp}).

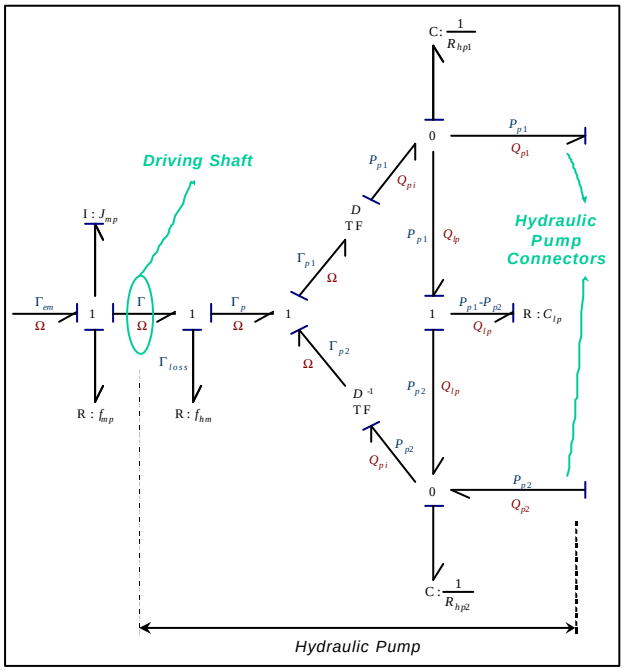

Fig. 4. Bond Graph of the hydraulic pump

The additional viscous friction coefficient (f_{hm}) takes into account other losses in the pump, assumed to be proportional to the rotational speed.

C. Hydraulic auxiliaries

The hydraulic bloc includes anti-cavitation and pressure relief functions (see Fig. 5).

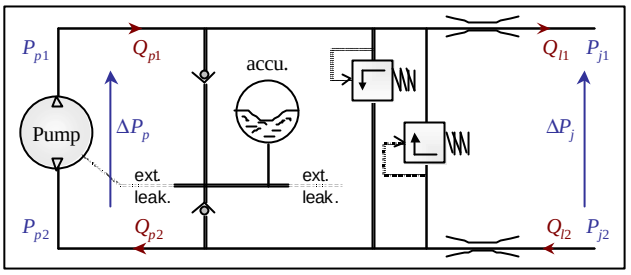

Fig. 5. Hydraulic pump and auxiliaries

The first one combines a low pressure oleo-pneumatic accumulator re-feeding the two hydraulic lines through check valves, in order to maintain a minimum pressure inside. The accumulator can be commonly modeled using a "C" element. However, a constant effort source "S_e" set to the pressure P_{accu} has been preferred for simplification purpose (Fig. 6). Due to its high dynamics, each re-feeding valve is modeled using a non-linear "$R^{\hat{u}}$" element (C_{valve}) whose characteristic is displayed on top left of Fig. 7.

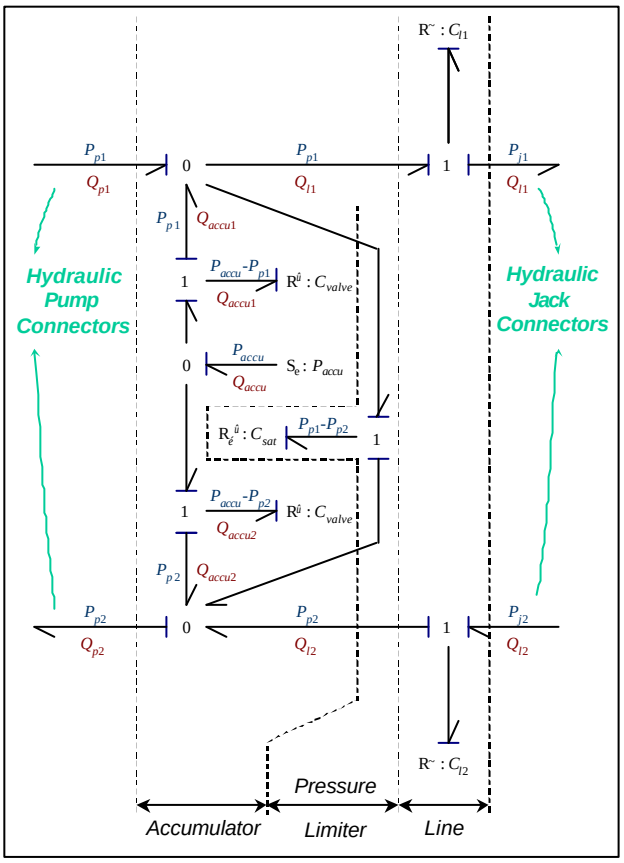

Fig. 6. Bond Graph of auxiliary hydraulic systems

The overpressure function is performed thanks to a combination of two pressure relief valves that limit the pressure difference between the two hydraulic lines. Once again, their high dynamic allows representing this function by a static model, using only a non-linear "$R_{\acute{e}}^{\hat{u}}$" element (C_{sat}), Fig. 7 top right.

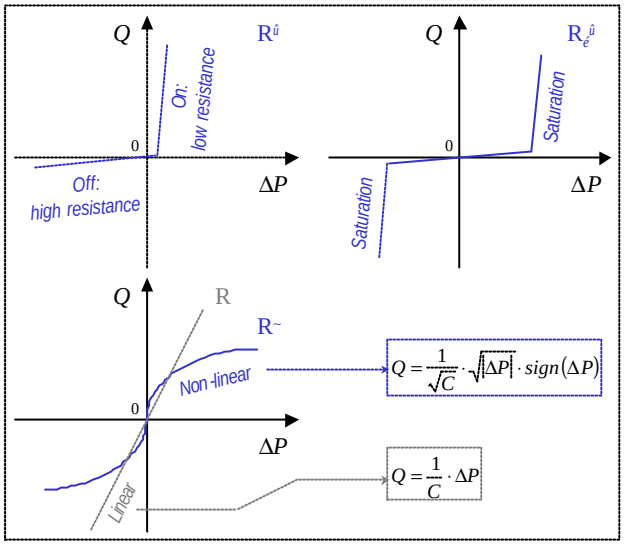

Fig. 7. Different "R" elements used in the EHA Bond Graph

The pressure losses into the lines are taken into account with two non-linear dissipative elements noticed "R~" (C_{l1} and C_{l2}), Fig. 7 bottom.

D. Hydraulic jack

A global view of the jack coupled to the flight control surface is given on Fig. 8.

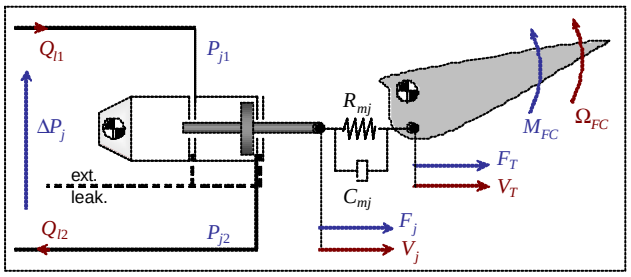

Fig. 8. Hydraulic jack and flight control surface

The main element constituting the jack is a "TF" with a transformer ratio equal to the piston surface (S) (see Fig. 9). Internal Hydraulic leakages can be modeled like in the hydraulic pump by a "R" element (C_{lj}). However, it may be considered as infinite thanks to the dynamic sealing.

The compressibility of the fluid in both chambers is obtained in Bond Graph with two "C" elements ($1/R_{hj1}$ and $1/R_{hj2}$) that are located on the jack side (the main fluid volume is located in the jack chambers). An efficient way to represent the jack dissipation is found by introducing a "dilatation viscosity" effect [GUI, 92], modeled by a "R" element on a "1" junction (C_{hj1} and C_{hj2}). On the mechanical side, the mass of the jack rod is placed on a "I" element (M_j), and the dry friction force is modeled by an effort source ($F_{dry\,j}$).

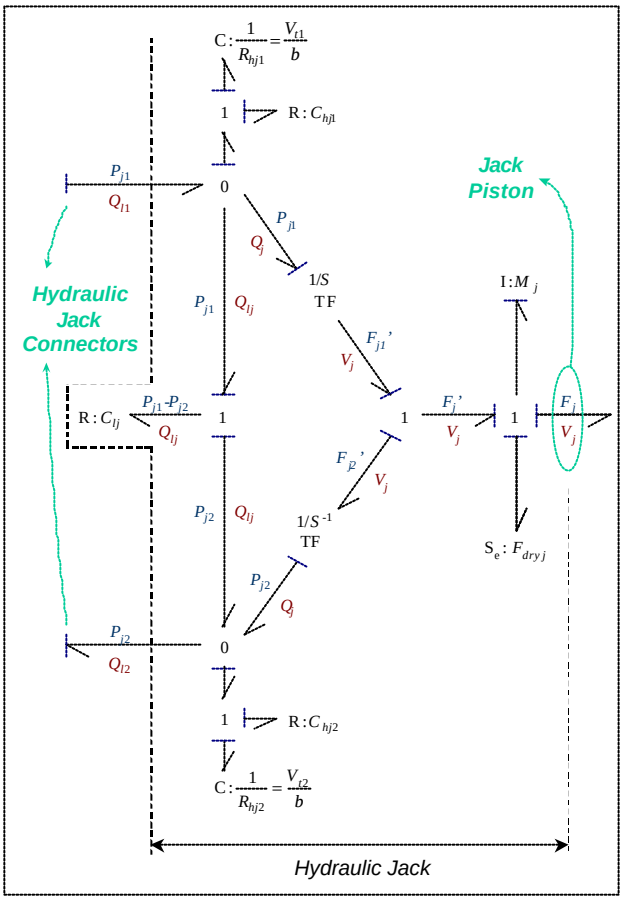

Fig. 9. Bond Graph of the hydraulic jack

E. Flight control surface

Due to the mass constraints, the jack attachment to the flight control surface is significantly no rigid. It is modeled by a finite stiffness represented by a "C" element ($1/R_{mj}$). The associated structural damping is modeled by a "R" element (C_{mj}) (see Fig. 10).

The transformation from rod translation to surface rotation is modeled using a "TF" element with a ratio equal to the lever arm (la).

Finally, the control surface inertia is taken into account with a "I" element (J).

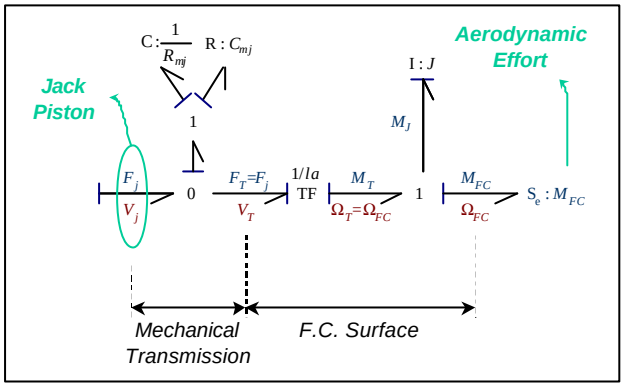

Fig. 10. Bond Graph of the flight control surface

Considering the causalities, it can be seen that the EHA model allows computing the surface deflection in response to the position set point and the hinge momentum applied to the surface (M_{FC}). According to the flight mission of the aircraft, hinge momentum and position order are fixed. On the electrical input part, the fixed variable is the DC network voltage. Therefore, the network current is set by the whole equipment, depending on the flight mission.

F. Simplified hydraulic part

Actually, the Bond Graph presented above owns two hydraulic lines, but it is possible to create an equivalent "one-line" Bond Graph with a low loss of information (see Fig. 11).

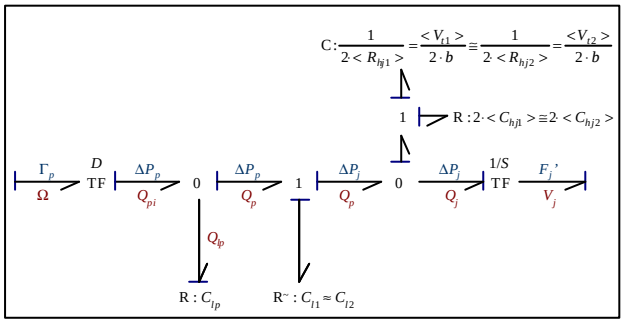

Fig. 11. Simplified hydraulic part: "one-line" modeling

On this model, hydraulic parameters have the mean values of real parameters. In particular, the jack piston chamber volume V_t is averaged to calculate hydraulic stiffness. Simplifications are also obtained by ignoring hydraulic jack leakage coefficient, and hydraulic pump stiffness. Accumulator and overpressure limiter are not represented on this figure. Concerning the accumulator, there is no equivalent working on a single-line schematic.

IV. POSITION CONTROL OF AN EHA

The challenge for controlling the system is to position the control surface with a sufficient performance level. In practice, the linear position of the hydraulic jack is controlled instead of the surface angle. The lever arm links the relation between the position angle and the linear position: in fact, the lever arm has a variable value depending on the position, but this can be easily taken into account, given the installation kinematics.

To realize the surface control, three regulation loops are imbricated (Fig. 12):

- the fastest one is the motor current loop,
- the medium one is the motor and pump speed loop,
- the slowest one is the jack linear position loop.

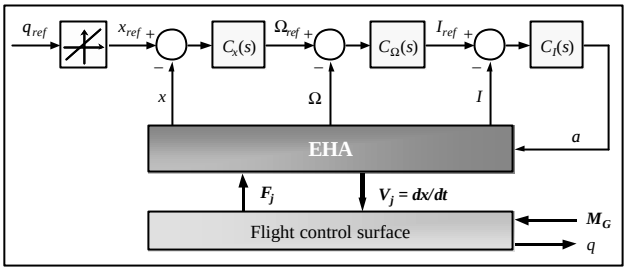

Fig. 12. Simplified synoptic of the EHA control

For an appropriate synthesis of the control parameters, the system must be well known. Transfer functions can be easily found out from a Bond Graph design. Modifications of the original Bond Graph model allow a best view to extract transfer functions (see Fig. 13). Hydraulic jack stiffness and leakage coefficient are transferred to the mechanical part, taking into account the transformer ratio S. The dry friction force is deleted. This is the same about the jack rod mass, because of its little value compared to the huge equivalent flight control mass: J / la^2.

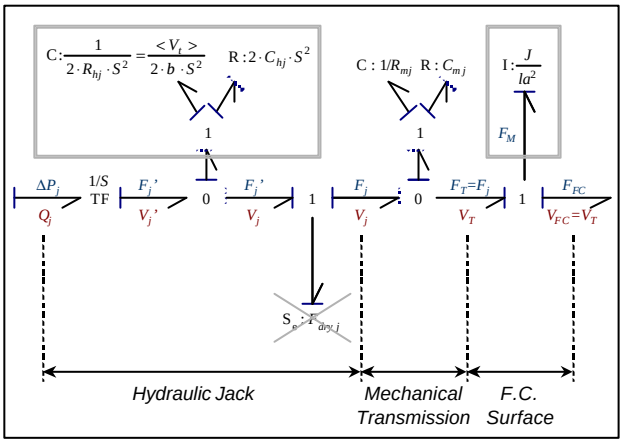

Fig. 13. Determination of transfer function

In this study, the "Archer" symbolic calculation solver, developed by the LAGIS of Lille, France [AZM, 92], has been used to find out transfer function between velocities V_T and V_j'. Regulators synthesis can then be achieved to reach the performance requirements.

The two other transfer functions (about Ω and I) can also be find out by using the Bond Graph. To synthesize the

three control loops, non-linear elements are not considered; they do not appear in transfer functions.

V. VALIDATION PROCESS AND SYSTEM ANALYSIS

Our Bond Graph model has been compared with results obtained from a behavioral model implemented on the Saber software and supplied to Airbus France by the manufacturer of the EHA. The reference model simulated on the Saber solver has been adapted for the surface of an Airbus A380 aileron. To obtain an accurate comparison of the two models, we have finally decided to also use Saber for our model simulations. For this purpose, we have taken advantage of the Bond Graph methodology from which it is easy to generate an equivalent electrical circuit. In this way, the complete model was simulated into Saber software, with the same input data. It is then particularly useful to obtain this "translation" from the Bond Graph.

A. Equivalent electrical circuit from a Bond Graph

The generalized power variables of a Bond Graph are the effort and the flow. For each physical domain, these variables correspond to specific variables, as mentioned in Table I.

TABLE I
BOND GRAPH VARIABLES

Physical domain	Effort	Flow
Electricity	Voltage	Current
Mechanic (rotation)	Torque	Angular velocity
Mechanic (translation)	Force	Linear velocity
Hydraulic	Pressure	Flow

The three basic passive elements, i.e. R, I and C also have an equivalent definition in the different physical domains. Therefore, it is easy to translate any Bond Graph into an electrical circuit. In this manner, whatever their physical field, all passive elements are changed into electrical elements inserted in an equivalent circuit. For example, mechanical torque source becomes a voltage source, and angular velocity becomes a current. The view of the electrical motor and the hydraulic pump is shown on Fig. 14.

To simplify, the electrical circuit implemented on Saber is the "single hydraulic line" Bond Graph of the EHA. The design is therefore the Bond Graph presented on section III, except the hydraulic part, Fig. 11. The last part of the electrical equivalent circuit is shown on Fig. 15.

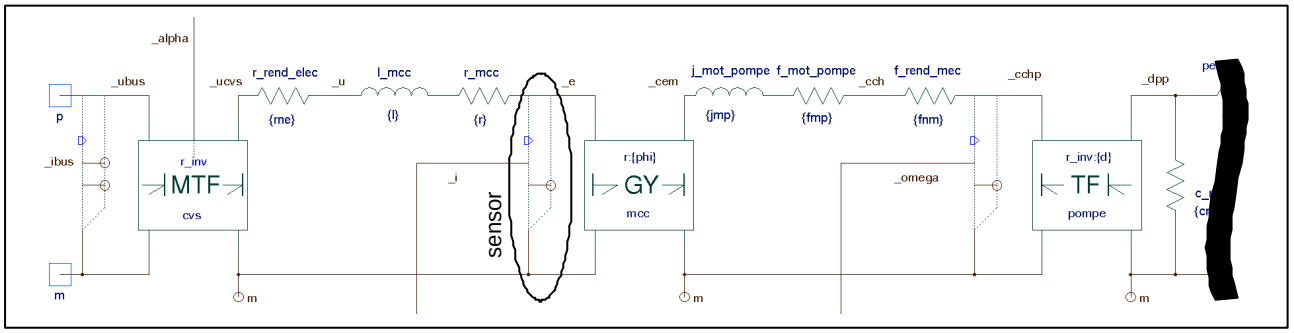

Fig. 14. Equivalent electrical circuit of the Bond Graph: from the DC bus to the hydraulic pump (Saber design)

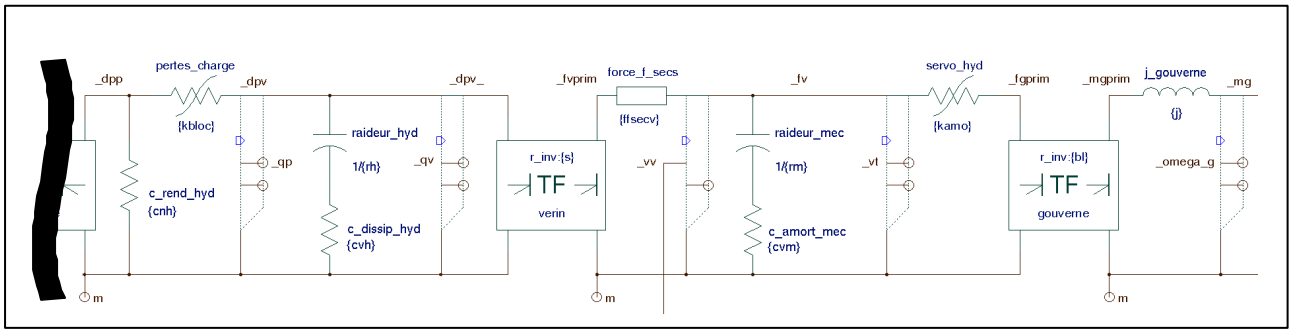

Fig. 15. Equivalent electrical circuit of the Bond Graph: from the hydraulic pump to the flight control (Saber design)

Transformers ("TF" or "MTF") and gyrators "GY" elements are created using linked sources. For example, considering the left "MTF" of Fig. 11, with a ratio r, the input effort e_1 is measured, and the output effort e_2 is calculated such as e_1/r. In the same way, the output flow f_2 is measured, and the input flow f_1 is calculated as f_2/r. The element is very simple, but it must be set conveniently to respect the causality of the circuit.

B. Validation tests

The comparison of the Bond Graph model transcribed in the Saber electrical design and the original manufacturer model is satisfactory. The presented tests concern a fast movement of the flight control surface. Positions responses are the same in both models. Observations of several variables show a little difference between curves, but responses are very similar. For example, the pressure and output flow pump responses are shown on Fig. 16 and Fig. 17 respectively.

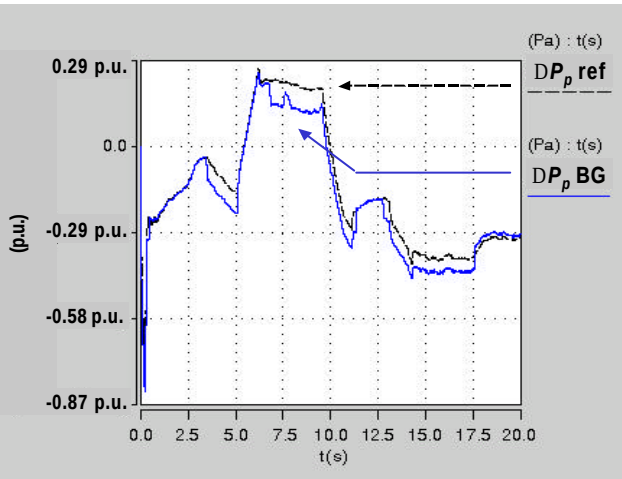

Fig. 16. Differential pressure on the hydraulic pump

The first one draws the output pump pressure, which is a state variable with fast variations. The result of the comparison is very good because dynamic effects are nearly the same.

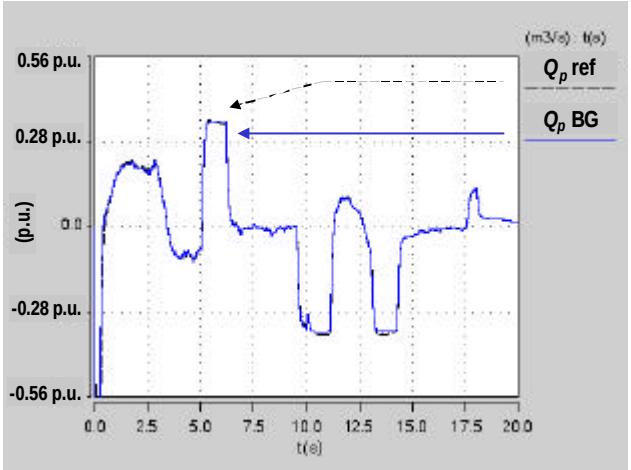

Fig. 17. Output flow of the hydraulic pump

In particular, for a same mechanical power on the surface, the electrical power at the input of the EHA almost identical (see Fig. 18).

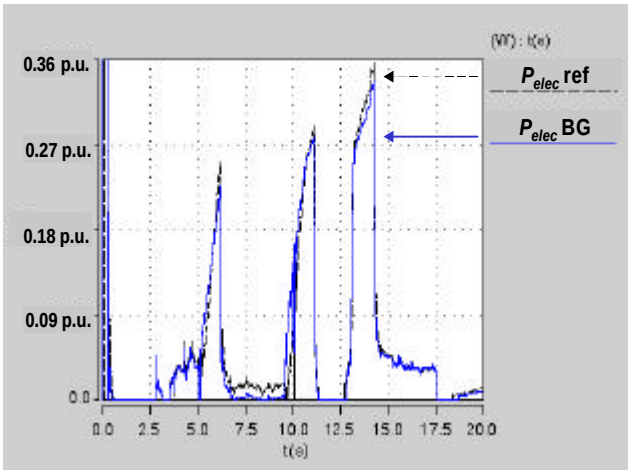

Fig. 18. Electrical input power of the EHA

The results of the comparison have been conclusive. Different measure points show that our Bond Graph model fits conveniently the original supplier behavioral model. Moreover, simulation time is slightly decreased.

C. Evolution and adaptation of the model

With respect to the reference behavioral model, the main advantage of the Bond Graph model is due its capability of evolution. In fact, it represents a "design model", whose parameters are directly linked to physical phenomena. Knowing system components, it is easy to modify the parameter values. This is convenient to resize an actuator, in order to use the same model structure for different sizes of actuators.

On the other hand, the complexity of the Bond Graph model can progressively evolve: its structure can be modified as much as needed, taking care of the causality.

Contrarily to a behavioral model, there is no specific calculation (transfer function, state model, etc) in the model, because each physical element is graphically represented. Therefore, adding a new element in the model does not involve recalculation; modifications are taken into account by the software solver. Furthermore, the causality analysis also allows facilitating the solver convergence by ensuring the compatibility of element couplings, and avoiding algebraic loops.

D. Aeronautic application

To achieve electrical simulations of the whole aircraft, all actuators were simulated in a same Saber design. In our case, the aim was to study energetic transfers on the electrical network, but such a design can also be used to study the electrical power quality [CRO, 04].

The advantage of the Bond Graph modeling compared to other methods is the good visibility of power transfers between all elements, and even between several actuators. The proposed model guarantees the reversibility of power flows, at the opposite of "transfer function approach" for example.

Thanks to the Bond Graph method, it is easy to see the impact of changing one parameter in the actuator model on the complete electrical network. The model structure can also be modified, taking care of the causality. Respecting the causality, computing convergence troubles due to causality conflicts are avoided. The analysis of causal paths highlights variable links. This is an advantage of Bond Graph method, in order to have a view of energetic dependences and resonances in the model.

VI. CONCLUSION

Thanks to the Bond Graph representation, multi field and heterogeneous systems such as EHA aeronautic actuators can be efficiently modeled. The capability to progressively evolve allows improving accuracy following the system analysis level, without increasing drastically the complexity of the model implementation.

The level of complexity of the model has to be chosen according to the needs. Dynamic effects are properly taken into account with a low complexity level.

Bond Graph structure facilitates the study of parameter variations. This is particularly convenient to size components and optimize a complete system.

REFERENCES

[BOS, 03] D. van den Bossche, "'More Electric' Control Surface Actuation; A Standard for the Next Generation of Transport Aircraft", EPE 2003, September 2003.

[HAB, 99] S. Habibi, "Design of a New High Performance ElectroHydraulic Actuator", IEEE, September 1999.

[KAR, 00] D. Karnopp, D. Margolis, R. Rosenberg, "System Dynamics: Modelling and Simulation of Mechatronic Systems", 3rd edition, 2000 (John Wiley & sons, New York).

[PAY, 61] H. Paynter, "Analysis and Design of engineering systems", 1961 (MIT Press).

[GUI, 92] M. Guillon, "L'asservissement hydraulique et électrohydraulique", Lavoisier, 1992.

[AZM, 92] A. Azmani, G. Dauphin-Tanguy, "ARCHER: a program for computer aided modelling and analysis", Bond Graph for Engineers, Ed. G. Dauphin-Tanguy and P. Breedveld, Elsevier, Science Pub., pp. 263-278, 1992.

[CRO, 04] A. M. Cross, G. Pryce-Jones, A. J. Forsyth, N. Baydar, S. MacKenzie, "Modelling and simulation for the evaluation of electric power systems of large passenger aircraft", 2004.