HAL
open science

A high-performance cell-based microwave clock using push-pull optical pumping

Rodolphe Boudot, Moustafa Abdel Hafiz, Bruno Francois, Grégoire Coget, Michael Petersen, S Guerandel, Peter Yun, Emeric de Clercq, Claudio Calosso, Salvatore Micalizio

▶ To cite this version:

Rodolphe Boudot, Moustafa Abdel Hafiz, Bruno Francois, Grégoire Coget, Michael Petersen, et al.. A high-performance cell-based microwave clock using push-pull optical pumping. International Frequency Control Symposium and European Frequency and Time Forum, Jul 2017, Besançon, France. hal-02472716

HAL Id: hal-02472716

https://hal.science/hal-02472716v1

Submitted on 10 Feb 2020

HAL is a multi-disciplinary open access archive for the deposit and dissemination of scientific research documents, whether they are published or not. The documents may come from teaching and research institutions in France or abroad, or from public or private research centers.

L'archive ouverte pluridisciplinaire **HAL**, est destinée au dépôt et à la diffusion de documents scientifiques de niveau recherche, publiés ou non, émanant des établissements d'enseignement et de recherche français ou étrangers, des laboratoires publics ou privés.

A high-performance cell-based microwave clock using push-pull optical pumping

R. Boudot[1], M. Abdel Hafiz[1], B. Francois[1,3], G. Coget[1], M. Petersen[1], S. Guérandel[2], P. Yun[2], E. De Clercq[2], C. E. Calosso[3], S. Micalizio[3]
[1]FEMTO-ST/CNRS/UBFC, Besançon, France
[2]LNE-SYRTE, Observatoire de Paris, PSL, CNRS, Sorbonne Universités, UPMC, Paris, France
[3]INRIM, Strada delle cacce, 91, 10135 Torino, Italy
rodolphe.boudot@femto-st.fr

***Abstract*—We report the study and development of a high-performance coherent-population trapping (CPT)-based Cs vapor cell atomic clock using the push-pull optical pumping (PPOP) technique. An original dual-frequency sub-Doppler spectroscopy technique, allowing the detection of high-contrast sub-Doppler absorption spikes, has allowed to improve the laser frequency stabilization by about one order of magnitude. The clock was operated and characterized in detail in both the continuous and pulsed (Ramsey-CPT) regimes, demonstrating in each case a short-term fractional frequency stability at the level of about 2 10^{-13} $\tau^{-1/2}$ up to 100 s integration time. The clock performances are currently limited by laser power effects. This CPT clock, with high potential for modest size and power consumption, ranking among the best microwave vapor cell atomic frequency standards, could find applications in telecommunication, instrumentation, defense or next-generation satellite-based navigation systems.**

***Keywords*—vapor cell clock, coherent population trapping, laser frequency stabilization, Doppler-free spectroscopy**

I. Introduction

Microwave rubidium vapor-cell atomic clocks are today ubiquitous timing devices used in numerous fields of industry including instrumentation, telecommunications or satellite-based navigation systems. Their success is explained by their ability to demonstrate excellent short-term fractional frequency stability at the level of 10^{-11}, combined with a small size, weight, power consumption and a relatively modest cost. Over the last decade, the use of advanced atom interrogation techniques (including pulsed Ramsey spectroscopy) using narrow-linewidth semiconductor lasers has conducted to the development in laboratories of high-performance new-generation vapor cell frequency standards [1].

In this domain, clocks based on coherent population trapping (CPT) have revealed to be promising alternative candidates [2]. In the frame of the Mclocks European project, we have developed a “still-in-progress” high-performance CPT-based Cs vapor cell atomic clock. This clock is based on the use of an optimized CPT pumping scheme, firstly proposed by Happer’s group [3] and named push-pull optical pumping (PPOP), allowing the detection of high-contrast CPT resonances on the magnetic-field insensitive clock transition [4,5]. The latter can be combined to a pulsed interrogation regime to allow the detection of high-contrast and narrow Ramsey-CPT fringes, exhibiting a greatly reduced sensitivity to laser power-induced frequency shift effects. This clock has recently demonstrated a short-term fractional frequency stability of 2.2 10^{-13} $\tau^{-1/2}$ up to τ = 100 s integration time, comparable for short-term with performances of best vapor cell frequency standards.

II. Experimental set-up

Figure 1 shows the CPT clock architecture.

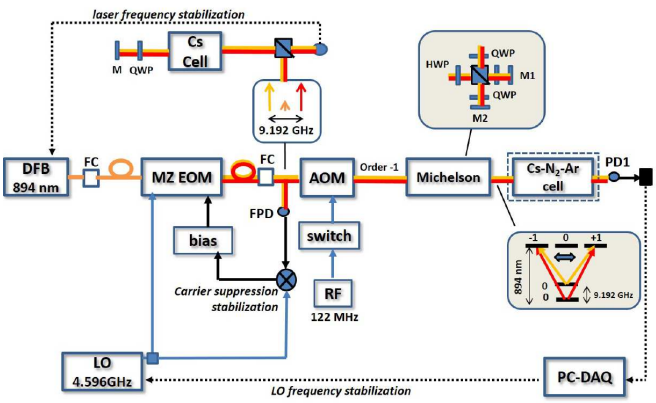

Fig. 1. Schematic of the Cs CPT clock.

This clock combines a distributed feedback (DFB) diode laser tuned on the Cs D_1 line (894.6 nm), a Mach-Zehnder electro-optic modulator (MZ EOM) driven by a local oscillator at 4.596 GHz for optical sidebands generation, an acousto-optic modulator for laser power stabilization, laser frequency shift and pulsed interaction, and a Michelson-based polarization orthogonalizer and delay-line system to produce the PPOP scheme. The output laser beam is sent into a buffer-gas filled (N_2-Ar, 15 Torr) 5-cm long and 2-cm diameter Cs cell-based atomic resonator. The laser frequency is stabilized using a dual-frequency Doppler-free spectroscopy set-up by sending and reflecting back the EOM output laser light into a reference evacuated Cs cell under null magnetic field. We have recently discovered that the saturated absorption scheme used with a dual-frequency laser could lead under appropriate conditions to a significant sign reversal of the usual Doppler-free dip, yielding a deep enhanced-absorption spike. The latter, shown on Fig. 2, was used to reduce the laser frequency instability at a level lower than 2 10^{-12} at 1 s averaging time [6,7].

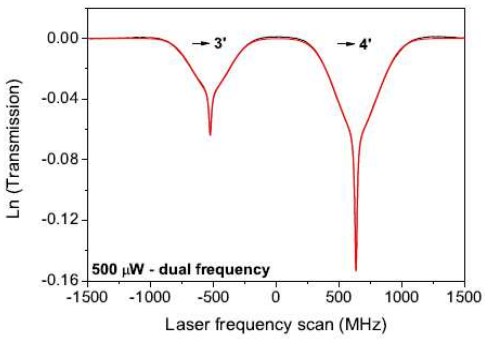

Fig. 2. High-contrast absorption spikes used for laser frequency stabilization.

In the pulsed regime, atoms interact with a sequence of optical CPT pulses. The typical pumping time is 1.1 ms while the free-evolution time of atoms in the dark is about 3 ms.

III. Results

Figure 3 shows typical clock resonance signals in both continuous and pulsed regimes, in their respective optimal conditions. In the CW regime, the laser power incident in the cell is about 270 µW, yielding a CPT linewidth of 538 Hz and a contrast of 32%. In the pulsed regime, with a laser power of 850 µW, the central fringe linewidth is 134 Hz for a contrast of 17%.

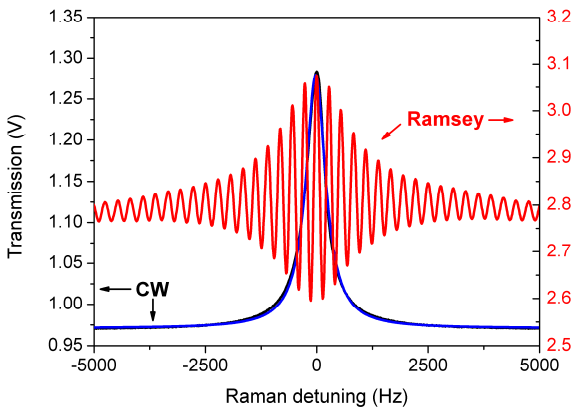

Fig. 3. Clock resonance signals in CW and pulsed regimes.

Figure 4 shows the current clock short-term frequency stability in both cases. The latter is measured at the level of 2.1 and 2.3 10^{-13} $\tau^{-1/2}$ up to 100 s integration time in CW and pulsed regimes respectively. It has to be noted that, at time of abstract submission, laser power stabilization was applied in the CW regime but not in the pulsed case. A detailed noise budget was performed, demonstrating that the clock frequency stability is limited to date by the laser AM-FM noise process in the CW regime and by the laser AM-AM noise in the pulsed case. Details will be reported at the conference [8]. Studies are under progress to improve the clock mid-term stability. Latest results and perspectives of this work will be reported at the conference.

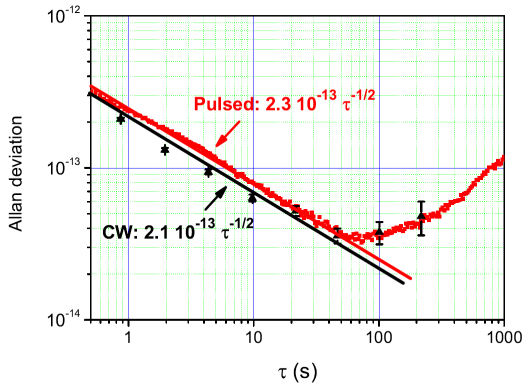

Fig. 4. Clock short-term fractional frequency stability in CW and pulsed regimes.

Acknowledgments

This work has been funded by the EMRP program (IND55 Mclocks). The EMRP is jointly funded by the EMRP participating countries within EURAMET and the European Union. The project was also supported by LNE (n° 14 7 002), ANR-DGA ISIMAC project (ANR-11-ASTR-0004) and LabeX FIRST-TF. The authors thank V. Maurice, P. Abbé and C. Rocher (FEMTO-ST) for their technical help and MClocks project partners for fruitful discussions. We thank deeply D. Brazhnikov, A. Taichenachev and V. I. Yudin (Institute of Laser Physics, Novosibirsk, Russia) for their relevant contribution to the dual-frequency Doppler-free spectroscopy scheme formalism.

References

[1] A. Godone, F. Levi, C. E. Calosso and S. Micalizio, High-performing vapor cell frequency standards, Rivista di Nuovo Cimento 38, 133 (2015).

[2] J. M. Danet, M. Lours, S. Guérandel, E. De Clercq, Dick effect in a pulsed atomic clock using coherent population trapping, IEEE Trans. On UFFC 61, 4 (2014).

[3] Y. Y. Jau and W. Happer, Push-pull optical pumping of pure superposition states, Phys. Rev. Lett. 93, 16 (2004).

[4] X. Liu, J. M. Mérolla, S. Guérandel, C. Gorecki, E. De Clercq and R. Boudot, Coherent-population-trapping resonances in buffer-gas-filled Cs vapor cells with push-pull optical pumping, Physical Review A, 87, 013416 (2013).

[5] M. Abdel Hafiz, R. Boudot. A coherent population trapping Cs vapor cell atomic clock based on push-pull optical pumping, Journal of Applied Physics, 118, 124903 (2015).

[6] M. Abdel Hafiz, G. Coget, E. De Clercq and R. Boudot, Doppler-free spectroscopy on the Cs D_1 line with a dual-frequency laser, Optics Letters 41, 1982 (2016).

[7] M. Abdel Hafiz, D. Brazhnikov, G. Coget, A. Taichenachev, V. I. Yudin, E. De Clercq and R. Boudot, High-contrast sub-Doppler absorption spikes in a hot atomic vapor cell exposed to a dual-frequency laser field, submitted to New Journ. Phys. (2017).

[8] M. Abdel Hafiz, G. Coget, P. Yun, S. Guérandel, E. De Clercq and R. Boudot, A high-performance Raman-Ramsey Cs vapor cell atomic clock, submitted to Journ. Appl. Phys (2017).