HAL open science

Fusion procedure for the walled Brauer algebra

D.V. Bulgakova, Oleg Ogievetsky

▶ To cite this version:

D.V. Bulgakova, Oleg Ogievetsky. Fusion procedure for the walled Brauer algebra. Journal of Geometry and Physics, 2020, 149, pp.103580. 10.1016/j.geomphys.2019.103580 . hal-02457692

HAL Id: hal-02457692

https://hal.science/hal-02457692v1

Submitted on 21 Jul 2022

HAL is a multi-disciplinary open access archive for the deposit and dissemination of scientific research documents, whether they are published or not. The documents may come from teaching and research institutions in France or abroad, or from public or private research centers.

L'archive ouverte pluridisciplinaire **HAL**, est destinée au dépôt et à la diffusion de documents scientifiques de niveau recherche, publiés ou non, émanant des établissements d'enseignement et de recherche français ou étrangers, des laboratoires publics ou privés.

Distributed under a Creative Commons Attribution - NonCommercial 4.0 International License

Version of Record: https://www.sciencedirect.com/science/article/pii/S0393044019302591
Manuscript_7cf734fa1d8bacf330cbb000d23788cb

Fusion procedure for the walled Brauer algebra

D.V. Bulgakova[◇†] **and O. Ogievetsky**[◇†*]

[◇]Aix Marseille Université, Université de Toulon, CNRS,
CPT UMR 7332, 13288, Marseille, France
[†] I.E.Tamm Dept of Theoretical Physics, Lebedev Physical Institute,
Leninsky prospect 53, 119991, Moscow, Russia
[*]Skolkovo Institute of Science and Technology, Moscow, Russia

Abstract

We establish two versions of the fusion procedure for the walled Brauer algebras. In each of them, a complete system of primitive pairwise orthogonal idempotents for the walled Hecke algebra is constructed by consecutive evaluations of a rational function in several variables on contents of standard walled tableaux.

1 Introduction

The main interest in the walled Brauer algebra $\mathsf{B}_{r,s}(\delta)$ is related to its role of the centralizer of the diagonal action of the group $GL(V)$ on the mixed tensor space $V^{\otimes r} \otimes (V^*)^{\otimes s}$, see [K, T, BCHLLS, Ni]. As the centralizer, the walled Brauer algebra acts irreducibly on the space of multiplicities in the decomposition of the tensor product $V^{\otimes r} \otimes (V^*)^{\otimes s}$ into a sum of $GL(V)$-irreducibles, so we need to understand well the basis in every irreducible representation of the algebra $\mathsf{B}_{r,s}(\delta)$. A fusion procedure gives a construction of the maximal family of pairwise orthogonal minimal idempotents in the algebra, and therefore, provides a way to understand bases in the irreducible representations of the algebra $\mathsf{B}_{r,s}(\delta)$.

The fusion procedure (for the symmetric group) originates in the work of Jucys [Ju], see also the subsequent works [Ch, Na, GP]. A simplified version of the fusion procedure for the symmetric group involving the consecutive evaluations was suggested by Molev in [Mo]. Later the analogues of this simplified fusion procedure were suggested for the Hecke algebra [IM], for

© 2019 published by Elsevier. This manuscript is made available under the CC BY NC user license
https://creativecommons.org/licenses/by-nc/4.0/

the Brauer algebra [IM, IMO], for the complex reflection groups of type $G(m,1,n)$, for the cyclotomic Hecke algebras [OP3, OP4], for the cyclotomic Brauer algebras [C], for the Birman–Murakami–Wenzl algebras [IMO2]. In [OP5] the fusion procedure was applied for the calculation of weights of certain Markov traces on the cyclotomic Hecke algebras.

The walled Brauer algebras form a tower which is an important ingredient of our presentation. The first r floors of the tower reproduce the tower of the symmetric groups. Essentially new effects start to appear at the $(r+1)$-st floor, after crossing the wall.

In this work we develop the fusion procedure, in the spirit of [Mo], for the walled Brauer algebra. That is, we exhibit a 'universal' rational function with values in the walled Brauer algebra whose consecutive evaluations at the contents of the appropriately generalized 'walled tableaux' give a complete system of primitive idempotents. This function is a product of a prefactor z_T, which is a usual rational function, and a universal rational function $\Psi_{r,s}$, see Section 3 for details. We find the minimal collection ze_T of factors in z_T such that the consecutive evaluations of the product $\mathsf{ze}_T\Psi_{r,s}$ are finite. To describe the function ze_T we adapt the notion of 'exponents' introduced in [IM] for the full Brauer algebra to the situation of the walled Brauer algebra. For the walled Brauer algebra the exponents take a simpler form than for the full Brauer algebra; the exponents are expressed in terms of the Laplacian of a function which counts the lengths of the diagonal in diagrams. We exhibit a version of the fusion procedure which depends on a free parameter.

2 Walled Brauer algebra

2.1 Definition

Let r and s be non-negative integers. We denote by $p^u_{r,s}$ and $p^d_{r,s}$ two sets, each consisting of $r+s$ points aligned horizontally on the plane; the points in the set $p^d_{r,s}$ are placed under the points in the set $p^u_{r,s}$. The left r points in the sets $p^u_{r,s}$ and $p^d_{r,s}$ we denote by a^u and a^d, the right s points – by b^u and b^d. The left points are separated by the wall from the right points. A walled (r,s)-diagram d is a bijection between the sets $a^u \cup b^d$ and $a^d \cup b^u$. In particular the number of walled (r,s)-diagrams is equal to $(r+s)!$. A walled (r,s)-diagram is visualised by placing the edges between the corresponding points of $a^u \cup b^d$ and $a^d \cup b^u$.

Let δ be a complex parameter. The walled Brauer algebra $\mathsf{B}_{r,s}(\delta)$ is defined as the $\mathbb{C}$-linear span of the walled (r,s)-diagrams with the multiplication defined as follows. The product of two diagrams Υ_1 and Υ_2 is determined by placing Υ_1 above Υ_2 and identifying the vertices of the bottom row of Υ_1 with the corresponding vertices in the top row of Υ_2. Let ℓ be the number of closed loops so obtained. The product $\Upsilon_1\Upsilon_2$ is given by δ^ℓ times the resulting diagram with loops omitted.

Let s_i, $1 \leqslant i < r$ or $r < i < r+s$, and d denote the following walled (r,s)-diagrams (the vertical dotted line represents the wall):

$s_i :=$ 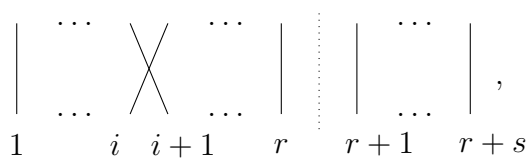

, $i = 1, \ldots, r-1$

$s_i :=$ 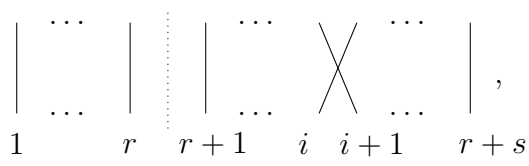

, $i = r+1, \ldots, r+s-1$

$d :=$ 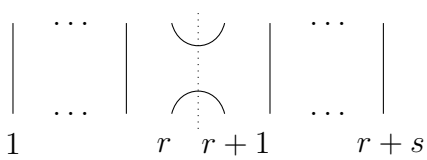

The walled Brauer algebra $\mathsf{B}_{r,s}(\delta)$ is generated by the elements s_i, $1 \leqslant i < r$ or $r < i < r+s$, and d, with the defining relations, see, e.g., [BS, JK],

$$s_i^2 = 1 \ , \ d^2 = \delta d \ ,$$

$$s_i s_{i+1} s_i = s_{i+1} s_i s_{i+1} \ ,$$

$$s_i s_j = s_j s_i \ \text{ if } \ |i-j| > 1 \ ,$$

$$d s_{r\pm 1} d = d \ \text{ and } \ d s_i = s_i d \ \text{ if } \ i \neq r \pm 1 \ ,$$

$$d s_{r+1} s_{r-1} d s_{r-1} = d s_{r+1} s_{r-1} d s_{r+1} \ ,$$

$$s_{r-1} d s_{r+1} s_{r-1} d = s_{r+1} d s_{r+1} s_{r-1} d \ .$$

The algebra $\mathsf{B}_{r,s}(\delta)$ admits an anti-automorphism ι, which acts as identity on the generators,

$$\iota(s_i) = s_i \ , \ \iota(d) = d \ , \ \iota(xy) = \iota(y)\iota(x) \ . \tag{2.1}$$

The subalgebra, generated by the elements s_i, $1 \leqslant i < r$, of the algebra $\mathsf{B}_{r,s}(\delta)$ is isomorphic to the group ring $\mathbb{C}[\mathbb{S}_r]$ of the symmetric group; the subalgebra, generated by the elements s_i, $r < i < r+s$, is isomorphic to the group ring $\mathbb{C}[\mathbb{S}_s]$.

It is known, see [CVDM], Theorem 6.3, that the walled Brauer algebra $\mathsf{B}_{r,s}(\delta)$ is semisimple if and only if one of the following conditions holds:

$r = 0$ or $s = 0$,

$\delta \notin \mathbb{Z}$,

$|\delta| > r + s - 2$,

$\delta = 0$ and $(r, s) \in \{(1, 2), (1, 3), (2, 1), (3, 1)\}$.

In the sequel we always assume that δ is generic, that is, the walled Brauer algebra is semisimple.

Let A_k be the subalgebra in the algebra $\mathsf{B}_{r,s}(\delta)$ generated by the walled (r, s)-diagrams non-trivial only at the first k sites of the sets $p^u_{r,s}$ and $p^d_{r,s}$ (that is, to the right of the k-th site the diagram has only vertical segments). For $k \leqslant r$, the algebra A_k is isomorphic to $\mathsf{B}_{k,0}(\delta) \cong \mathbb{C}[\mathbb{S}_k]$ while for $r < k \leqslant r+s$ the algebra A_k is isomorphic to $\mathsf{B}_{r,k-r}(\delta)$. The algebras A_k, $0 \leqslant k \leqslant r + s$, form an ascending chain of algebras

$$\mathbb{C} \equiv \mathsf{A}_0 \subset \mathsf{A}_1 \subset \ldots \subset \mathsf{A}_{r+s} \equiv \mathsf{B}_{r,s}(\delta) \ . \tag{2.2}$$

The Bratteli diagram for this chain plays an important role in the representation theory of the walled Brauer algebras and, in particular, in our fusion procedures.

If $r = 0$ or $s = 0$ the algebra $\mathsf{B}_{r,s}(\delta)$ is the group algebra of the symmetric group, for which the fusion procedure is well established, so we shall always assume that both r and s are different from 0.

To shorten the formulation of our results it is convenient to introduce the following function on the set $\{1, \ldots, r + s\}$

$$\varepsilon(j) := \begin{cases} 0 & \text{if} \ \ j \leqslant r \ , \\ 1 & \text{if} \ \ j > r \ . \end{cases} \tag{2.3}$$

2.2 Jucys–Murphy elements

The Jucys–Murphy elements for the walled Brauer algebras are adapted to the chain (2.2).

Let $s_{i,k}$ where $1 \leqslant i < k \leqslant r$ or $r+1 \leqslant i < k \leqslant r+s$ and $d_{i,k}$ where $1 \leqslant i \leqslant r < k \leqslant r+s$ denote the following walled (r,s)-diagrams:

$s_{i,k} :=$ 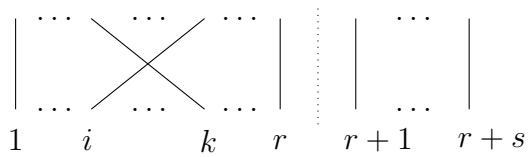

,

$s_{i,k} :=$ 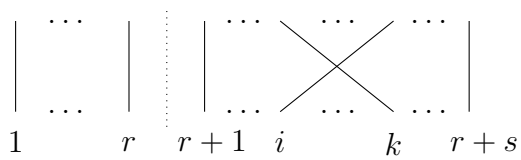

,

$d_{i,k} :=$ 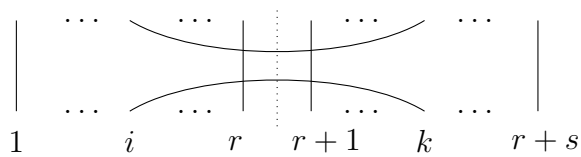

.

In particular, $s_i = s_{i,i+1}$, $1 \leqslant i < r$ or $r < i < r+s$, $d = d_{r,r+1}$.

In terms of generators, the elements $s_{i,k}$ and $d_{i,k}$ can be written as

$$s_{i,k} = s_i s_{i+1} \dots s_{k-2} s_{k-1} s_{k-2} \dots s_{i+1} s_i \,,$$

$$d_{i,k} = s_i s_{i+1} \dots s_{r-1} s_{k-1} s_{k-2} \dots s_{r+1} d s_{r+1} \dots s_{k-2} s_{k-1} s_{r-1} \dots s_{i+1} s_i \,.$$

The Jucys-Murphy elements for the walled Brauer algebra are, see [BS, SS, JK],

$$x_k := \begin{cases} \displaystyle\sum_{i=1}^{k-1} s_{i,k} & \text{if } 1 \leqslant k \leqslant r \,, \\ \displaystyle -\sum_{i=1}^{r} d_{i,k} + \sum_{i=r+1}^{k-1} s_{i,k} + \delta & \text{if } k \geqslant r+1 \,. \end{cases}$$

One checks that the element x_k commutes with any element of the subalgebra A_{k-1}, in the notation (2.2) for the tower. This implies that the elements $x_1, \dots, x_{r+s}$ of $\mathsf{B}_{r,s}(\delta)$ pairwise commute.

Moreover, it follows from the representation theory of the walled Brauer algebras that the subalgebra generated by the elements $x_1, \ldots, x_{r+s}$ is a maximal commutative subalgebra of the algebra $\mathsf{B}_{r,s}(\delta)$.

We note that the walled Brauer algebra $\mathsf{B}_{r,s}(\delta)$ is naturally a subalgebra of the Brauer algebra $\mathsf{B}_{r+s}(\delta)$. Interestingly, the Jucys–Murphy elements for the walled Brauer algebra are obtained by omitting in the Jucys–Murphy elements for the Brauer algebra the summands corresponding to the diagrams which do not exist in the walled Brauer algebra.

2.3 Representations

We will identify each partition γ with its diagram so that if the parts of γ are $\gamma_1, \gamma_2, \ldots,\ \gamma_1 \geqslant \gamma_2 \geqslant \ldots$, then the corresponding diagram is a left-justified array of rows of boxes containing γ_1 boxes in the top row, γ_2 boxes in the second row, etc. The box in the row i and column j will be denoted by (i, j).

We let

$$A(\gamma) \text{ be the set of all addable cells}$$

and

$$R(\gamma) \text{ the set of all removable cells}$$

of the diagram γ.

A bipartition Λ is a pair of partitions $\Lambda = (\lambda_L, \lambda_R)$. Let $\mathcal{D}$ be the set of all bipartitions. For each integer $0 \leqslant f \leqslant \min(r, s)$, let

$$\mathcal{D}_{r,s}(f) := \{\Lambda \in \mathcal{D} \colon |\lambda_L| = r - f\ ,\ |\lambda_R| = s - f\}\ ,$$

where $|\lambda|$ denotes the sum of the parts of λ, and

$$\mathcal{D}_{r,s} := \bigcup_{f=0}^{\min(r,s)} \mathcal{D}_{r,s}(f)\ .$$

The irreducible representations of the walled Brauer algebra $\mathsf{B}_{r,s}(\delta)$ are indexed by the elements of the set $\mathcal{D}_{r,s}$, see [CVDM], Theorem 2.7. We shall denote by V_Λ the representation corresponding to a bipartition $\Lambda \in \mathcal{D}_{r,s}$.

The branching rules for the ascending chain (2.2) are simple. Here is the figure showing the Bratteli diagram for the chain on the example of the walled Brauer algebra $\mathsf{B}_{2,2}(\delta)$.

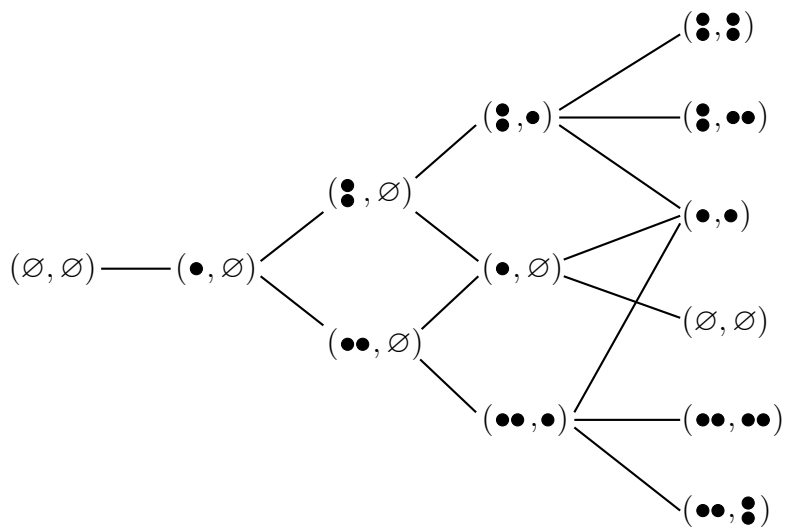

Figure 1: Bratteli diagram

2.4 A basis in V_Λ

The following construction is given in [JK]. Let $\Lambda = (\lambda_L, \lambda_R)$ be a bipartition. A *standard walled* Λ*-tableau* is a sequence $T = (\Lambda^{(0)}, \dots, \Lambda^{(r+s)})$ of bipartitions such that $\Lambda^{(0)} = (\varnothing, \varnothing)$, $\Lambda^{(r+s)} = \Lambda$ and for each $t = 1, \dots, r+s$ the bipartition $\Lambda^{(t)}$ is obtained from $\Lambda^{(t-1)}$ by

- adding a box to the first diagram in the bipartition when $1 \leqslant t \leqslant r$;
- adding a box to the second diagram or removing a box from the first diagram when $r+1 \leqslant t \leqslant r+s$.

Thus, T represents a path in the Bratteli diagram of the algebra $\mathsf{B}_{r,s}(\delta)$.

We say that $r+s$ is the length of T. We write $U \nearrow T$ if the standard walled tableau U of length $r+s-1$ is obtained by removing the last entry $\Lambda^{(r+s)}$ from the sequence T.

We shall denote by $\mathcal{T}_\Lambda$ the set of all standard walled Λ-tableaux.

As always, in the situation when the branching rules for a Bratteli diagram are simple, a path $T \in \mathcal{T}_\Lambda$ defines a one-dimensional subspace V_T in the space V_Λ. Choose an arbitrary non-zero vector $v_T \in V_T$. The set $\{v_T\}$, $T \in \mathcal{T}_\Lambda$, is a basis of the space V_Λ.

To each standard walled tableau T we attach its sequence of *contents* $(c_1(T), \ldots, c_{r+s}(T))$, where

- if $1 \leqslant t \leqslant r$ and $\Lambda^{(t)}$ is obtained from $\Lambda^{(t-1)}$ by adding a box (i, j) to the first diagram in the bipartition then

$$c_t(T) := j - i \ , \tag{2.4}$$

- if $t \geqslant r + 1$ and $\Lambda^{(t)}$ is obtained from $\Lambda^{(t-1)}$ by removing a box (i, j) from the first diagram then

$$c_t(T) := -(j - i) \ , \tag{2.5}$$

- and, if $t \geqslant r + 1$ and $\Lambda^{(t)}$ is obtained from $\Lambda^{(t-1)}$ by adding a box (i, j) to the second diagram then

$$c_t(T) := (j - i) + \delta \ . \tag{2.6}$$

It is convenient to decorate the Bratteli diagram, writing at each edge of the path T the corresponding content, as shown below on our example of the algebra $\mathsf{B}_{2,2}(\delta)$.

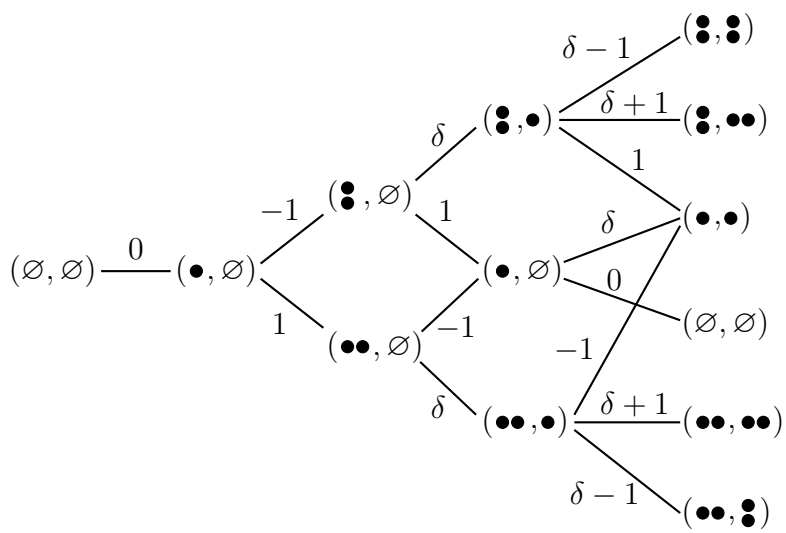

Figure 2: Paths and contents

Clearly, a path T can be reconstructed from its sequence of contents.

We encode the sequence T of bipartitions in the following way. We first associate to the sequence T three Young diagrams $\lambda'(T)$, $\nu(T)$ and $\lambda''(T)$ such that $\nu(T) \subseteq \lambda'(T)$. The diagram $\lambda'(T) := \lambda_L^{(r)}$ is the left diagram in the bipartition $\Lambda^{(r)}$. The diagram $\nu(T) := \lambda_L^{(r+s)}$ is the left final diagram and the diagram $\lambda''(T) := \lambda_R^{(r+s)}$ is the right final diagram in the bipartition $\Lambda^{(r+s)}$. We call

$$D_T := [\lambda'(T),\, \nu(T),\, \lambda''(T)]$$

the *triple diagram* corresponding to the path T.

Next, we fill the boxes of the diagrams $\lambda'(T)$, $\lambda''(T)$ and the set-theoretical difference $\lambda'(T) \setminus \nu(T)$. Exactly as for the symmetric group, the boxes of the diagram $\lambda'(T)$ are filled with numbers $1, \ldots, r$, representing the order in which the boxes were added in the sequence $(\lambda_L^{(0)}, \ldots, \lambda_L^{(r)})$. The boxes of the union $\big(\lambda'(T) \setminus \nu(T)\big) \sqcup \lambda''(T)$ are filled with numbers $r+1, \ldots, r+s$ in the order in which the boxes were removed or added in the sequence $(\Lambda^{(r+1)}, \ldots, \Lambda^{(r+s)})$. The resulting filling we call the *standard triple tableau* W_T corresponding to the path T.

It is straightforward to see that the correspondence between the set of all paths and the set of all standard triple tableaux is one to one.

We visualize the standard walled tableau by putting the numbers corresponding to the filling of $\lambda'(T)$ in the upper left corner of boxes and the numbers corresponding to the filling of $\lambda'(T) \setminus \nu(T)$ in the lower right corners. This should be clear on the following example of a path for the algebra $\mathsf{B}_{3,5}(\delta)$.

Example 1 *For the sequence T*

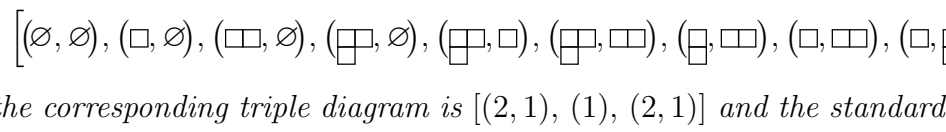

the corresponding triple diagram is $[(2,1),\, (1),\, (2,1)]$ *and the standard triple tableau W_T is*

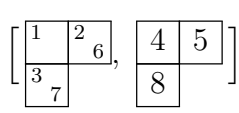

The contents of boxes in the sets $\lambda'(T)$, $\lambda'(T) \setminus \nu(T)$ and $\lambda''(T)$ are calculated according to the formulas (2.4), (2.5) and (2.6) respectively. The

content of the box occupied by the number j in the standard triple diagram corresponding to a path T will be denoted by $c_j(T)$.

Let $T = (\Lambda^{(0)}, \dots, \Lambda^{(r+s)})$, $\Lambda^{(r+s)} = \Lambda$, be a standard walled Λ-tableau. The vector v_T is the common eigenvector for the Jucys-Murphy elements x_j, $j = 1, \dots, r+s$, and the eigenvalues are precisely the contents,

$$x_j v_T = c_j(T) v_T \ , \ j = 1, \dots, r+s \ .$$

We recall some standard facts valid in the situation when the branching rules are simple and the vectors v_T are common eigenvectors of a set of elements generating a maximal commutative subalgebra.

Since the vectors v_T, $T \in \mathcal{T}_\Lambda$, form a basis in V_Λ, we have the complete set $\{E_T\}$ of primitive idempotents in $\mathrm{Mat}(V_\Lambda)$; the operator E_T is the projector on the one-dimensional subspace V_T along the subspace of codimension one spanned by the vectors $v_{T'}$, $T' \in \mathcal{T}_\Lambda \backslash \{T\}$. The primitive idempotent E_T, corresponding to the vector v_T, satisfies

$$x_t \, E_T = E_T \, x_t = c_t(T) E_T \ , \quad t = 1, \dots, r+s \ . \tag{2.7}$$

Consider the standard walled tableau $U = (\Lambda^{(0)}, \dots, \Lambda^{(r+s-1)})$; recall that we assume that $s > 0$. Let $\alpha \in R\big(\nu(U)\big) \sqcup A\big(\lambda''(U)\big)$ be the box of W_T occupied by the number $r+s$. By construction, we have

$$E_T = E_U \, \frac{(x_{r+s} - a_1) \dots (x_{r+s} - a_\ell)}{(c_{r+s}(T) - a_1) \dots (c_{r+s}(T) - a_\ell)} \ ,$$

where $a_1, \dots, a_\ell$ are the contents of all boxes in $\Big(R\big(\nu(U)\big) \sqcup A\big(\lambda''(U)\big) \Big) \backslash \{\alpha\}$.

The elements $\{E_T\}$ for T a standard walled Λ-tableau, $\Lambda \in \mathcal{D}_{r,s}$, form a complete set of pairwise orthogonal primitive idempotents for $\mathsf{B}_{r,s}(\delta)$.

We have also the following relation:

$$E_T = E_U \frac{u - c_{r+s}}{u - x_{r+s}} \Big|_{u = c_{r+s}} , \tag{2.8}$$

where u is a complex variable. Indeed, the actions of the right and left hand sides of (2.8) on the vectors v_W, $W \in \mathcal{T}_\Lambda$, coincide.

Remark 2 *The walled Brauer algebras resemble the symmetric groups in certain aspects (like the dimension, the length generating function for words [BGO]) so it is natural to expect that the representation theory of the tower of the walled Brauer algebras can be built in the frame of the inductive approach of Okounkov–Vershik to the representation theory of the symmetric groups [OV], see also [IO] for the Hecke algebras, [IO2] for the Birman–Murakami–Wenzl algebras and [OP, OP2] for the cyclotomic algebras.*

2.5 Spectral parameters

Denote, for $i \neq j$,

$$s_{i,j}(u) := 1 - \frac{s_{i,j}}{u} \quad \text{if} \;\; \varepsilon(i) + \varepsilon(j) \;\; \text{is even} \;,$$

$$d_{i,j}(u) := 1 - \frac{d_{i,j}}{u} \quad \text{if} \;\; \varepsilon(i) + \varepsilon(j) \;\; \text{is odd} \;,$$

where the function ε is defined by (2.3). Let $w_{i,j}(u)$ be, depending on $\varepsilon(i) + \varepsilon(j)$, either $s_{i,j}(u)$ or $d_{i,j}(u)$. If the indices i, j, k, l are pairwise distinct then

$$w_{i,j}(u) w_{k,l}(v) = w_{k,l}(v) w_{i,j}(u) \;.$$

We have

$$s_{i,j}(u) s_{i,j}(-u) = \frac{u^2 - 1}{u^2} \;, \tag{2.9}$$

and

$$d_{i,j}(u) d_{i,j}(\delta - u) = 1 \;. \tag{2.10}$$

The functions $s_{i,j}(u)$ satisfy the Yang-Baxter equation with the spectral parameter

$$s_{i,j}(u) s_{i,k}(u+v) s_{j,k}(v) = s_{j,k}(v) s_{i,k}(u+v) s_{i,j}(u) \;, \tag{2.11}$$

with pairwise distinct indices i, j, k.

Additionally, we have $(i \neq j \neq k \neq i)$

$$d_{j,i}(u) d_{k,i}(u-v) s_{j,k}(v) = s_{j,k}(v) d_{k,i}(u-v) d_{j,i}(u) \;, \tag{2.12}$$

and

$$d_{i,j}(u) s_{i,k}(\delta - u - v) d_{k,j}(v) = d_{k,j}(v) s_{i,k}(\delta - u - v) d_{i,j}(u) \;. \tag{2.13}$$

Remark 3 *Equations (2.11), (2.12) and (2.13) can be elegantly written in a uniform manner. Let*

$$\tilde{w}_{i,j}(u) := \begin{cases} s_{i,j}(u) & \text{if } \varepsilon(i)+\varepsilon(j) \text{ is even} , \\ d_{i,j}(\delta/2-u) & \text{if } \varepsilon(i)+\varepsilon(j) \text{ is odd} . \end{cases}$$

Then

$$\tilde{w}_{i,j}(u)\tilde{w}_{i,k}(u+v)\tilde{w}_{j,k}(v) = \tilde{w}_{j,k}(v)\tilde{w}_{i,k}(u+v)\tilde{w}_{i,j}(u)$$

whenever $i \neq j \neq k \neq i$.

3 Main results

The main result of this paper is the construction of the complete set $\{E_T\}$, see (2.7), of pairwise orthogonal primitive idempotents for the walled Brauer algebra $\mathsf{B}_{r,s}(\delta)$.

3.1 Fusion procedure

The original fusion procedure for the Brauer algebra was given in [IM]. In this section we formulate its analogue for the walled Brauer algebra. The proof is in Section 4.1.

In what follows we let

$$n = r + s \ .$$

Consider the rational function, in variables $u_1, \ldots, u_n$, with values in the walled Brauer algebra $\mathsf{B}_{r,s}(\delta)$:

$$\Psi_{r,s} := \mathfrak{D}_{r,s}\, \mathfrak{S}_r\, \mathring{\mathfrak{S}}_s \ , \tag{3.14}$$

where

$$\mathfrak{D}_{r,s} := \prod_{\substack{1\leqslant i\leqslant r \\ r+1\leqslant j\leqslant n}} d_{i,j}(u_i+u_j)$$

and

$$\mathfrak{S}_r := \prod_{1\leqslant i<j\leqslant r} s_{i,j}(u_i-u_j) \ \ , \ \ \mathring{\mathfrak{S}}_s := \prod_{r+1\leqslant i<j\leqslant n} s_{i,j}(u_i-u_j) \ . \tag{3.15}$$

The products in the definitions of $\mathfrak{D}_{r,s}$, $\mathfrak{S}_r$ and $\mathring{\mathfrak{S}}_s$ are calculated in the lexicographical order on the pairs (i,j) (that is, (i_1,j_1) precedes (i_2,j_2) if $i_1<i_2$ or $i_1=i_2$ and $j_1<j_2$).

Let $T=(\Lambda^{(0)},\dots,\Lambda^{(n)})$, $\Lambda^{(n)}=\Lambda\in\mathcal{D}_{r,s}$, be a standard walled Λ-tableau describing a path in the Bratteli diagram for the walled Brauer algebra $\mathsf{B}_{r,s}(\delta)$. We define the rational function in the variables $u_1,\dots,u_n$:

$$z_T := \prod_{i=1}^{n} \frac{u_i-c_i}{u_i-\delta\,\varepsilon(i)} \;\times \prod_{\substack{1\leqslant j<i\leqslant r\\ \text{or}\\ r<j<i\leqslant n}} \frac{(u_i-u_j)^2}{(u_i-u_j)^2-1}\;, \tag{3.16}$$

where the function ε is defined by (2.3), and for brevity we denoted $c_i=c_i(T)$, $i=1,\dots,n$.

Set

$$\Psi_T(u_1,\dots,u_n) := z_T\cdot\Psi_{r,s}\;. \tag{3.17}$$

Theorem 4 *The primitive idempotent E_T, corresponding to the standard walled Λ-tableau T, is found by the consecutive evaluations*

$$E_T=\Psi_T(u_1,\dots,u_n)\big|_{u_1=c_1}\big|_{u_2=c_2}\dots\big|_{u_n=c_n}\;.$$

Example 5 *For $r=s=2$, let T be the standard walled tableau corresponding to the contents sequence $(0,-1,1,0)$, see Figure 2. We have*

$$\Psi_{2,2}(0,u_2,u_3,u_4) \;=\; \left(1-\frac{d_{1,3}}{u_3}\right)\left(1-\frac{d_{1,4}}{u_4}\right)\left(1-\frac{d}{u_2+u_3}\right)\left(1-\frac{d_{2,4}}{u_2+u_4}\right)$$
$$\times\left(1+\frac{s_1}{u_2}\right)\left(1-\frac{s_3}{u_3-u_4}\right)\;.$$

This expression has singularities at $u_3=-u_2$ or $u_4=0$. However in the process of the consecutive evaluations of the product of $\Psi_{2,2}(u_1,u_2,u_3,u_4)$ with the prefactor z_T the singularities cancel and we find

$$E_T=\frac{1}{2\delta(\delta-1)}\,(1-s_1)\cdot ds_1s_3d\cdot(1-s_1)\;.$$

Remark 6 *The function*

$$\prod_{1\leqslant i<j\leqslant n} d_{i,j}(u_i+u_j) \;\times \prod_{1\leqslant i<j\leqslant n} s_{i,j}(u_i-u_j) \tag{3.18}$$

for the Brauer algebra $\mathsf{B}_n(\delta)$ *was suggested in [Na2]. Note that the function* $\Psi_{r,s}$*, defined in (3.14), can be obtained by dropping, in the expression (3.18), factors corresponding to the diagrams which do not exist in the walled Brauer algebra. Thus the function* $\Psi_{r,s}$ *makes sense in the Brauer algebra* $\mathsf{B}_n(\delta)$ *and the consecutive evaluations of the product* $z_T\cdot\Psi_{r,s}$ *give rise to certain idempotents of the Brauer algebra* $\mathsf{B}_n(\delta)$*. It would be interesting to understand the representation-theoretic/combinatorial meaning of these idempotents.*

3.1.1 Reformulation of Theorem 4

As we already stressed, we are interested in the fusion procedure only after the wall crossing so we shall accordingly change the notation. A standard walled Λ-tableau $T=(\Lambda^{(0)},\dots,\Lambda^{(r+s)})$, $\Lambda^{(r+s)}=\Lambda$, will be denoted by $T=(T_r,\Lambda^{(r+1)},\dots,\Lambda^{(r+s)})$ where $T_r=(\Lambda^{(0)},\dots,\Lambda^{(r)})$ is the standard Young tableau of shape $\lambda'(T)$. We fix the tableau T till the end of Section and set $c_i=c_i(T)$.

For j such that $r+s\geqslant j>r$ let

$$\mathfrak{d}_j^{\downarrow}:=d_{r,j}(u_r+u_j)d_{r-1,j}(u_{r-1}+u_j)\dots d_{1,j}(u_1+u_j)$$

and

$$\mathring{\mathfrak{d}}_j^{\downarrow}:=\mathfrak{d}_j^{\downarrow}\big|_{u_1=c_1}\dots\big|_{u_r=c_r}=d_{r,j}(c_r+u_j)d_{r-1,j}(c_{r-1}+u_j)\dots d_{1,j}(c_1+u_j)\ .$$

The symbol $^\circ$ (it appeared already in (3.14)) over a letter signifies that we are dealing with a rational function which depends on the variables $u_{r+1},\dots,u_n$ only.

With the help of the equalities (2.12), see Section 4.1, one finds

$$\mathfrak{D}_{r,s}\,\mathfrak{S}_r=\mathfrak{S}_r\,\mathfrak{d}_{r+1}^{\downarrow}\mathfrak{d}_{r+2}^{\downarrow}\dots\mathfrak{d}_n^{\downarrow}\ .$$

The fusion procedure of [Mo] for the symmetric group says that the primitive idempotent E_{T_r} corresponding to the standard tableau T_r of the symmetric group $\mathbb{S}_r$ is obtained by the consecutive evaluations

$$E_{T_r}=\left(\prod_{i=1}^{r}\frac{u_i-c_i}{u_i}\;\times\prod_{1\leqslant j<i\leqslant r}\frac{(u_i-u_j)^2}{(u_i-u_j)^2-1}\cdot\mathfrak{S}_r\right)\Big|_{u_1=c_1}\dots\Big|_{u_r=c_r}\ .$$

The part of the prefactor z_T, see (3.16), which corresponds to the after-wall tail $(\dots,\Lambda^{(r+1)},\dots,\Lambda^{(r+s)})$ of the tableau T, is the rational function in the variables $u_{r+1},\dots,u_n$:

$$\mathring{z}_T := \prod_{i=1}^{n} \frac{u_i - c_i}{u_i - \delta} \times \prod_{r<j<i\leqslant n} \frac{(u_i-u_j)^2}{(u_i-u_j)^2-1} \ .$$

Let now

$$\mathring{\Psi}_{n;T_r}(u_{r+1},\dots,u_n) := E_{T_r}\mathring{\mathfrak{d}}^{\downarrow}_{r+1}\mathring{\mathfrak{d}}^{\downarrow}_{r+2}\dots\mathring{\mathfrak{d}}^{\downarrow}_{n}\,\mathring{\mathfrak{S}}_s$$

and

$$\mathring{\Psi}_T(u_{r+1},\dots,u_n) := \mathring{z}_T\cdot\mathring{\Psi}_{n;T_r}(u_{r+1},\dots,u_n) \ .$$

We reformulate Theorem 4 in the following way: *the idempotent E_T is found by the consecutive evaluations*

$$E_T = \mathring{\Psi}_T(u_{r+1},\dots,u_n)\big|_{u_{r+1}=c_{r+1}}\dots\big|_{u_n=c_n} \ .$$

3.2 Exponents

The function Ψ_T whose consecutive evaluations give the primitive idempotents, has two parts: the function z_T, defined in (3.16) and the function $\Psi_{r,s}$, defined in (3.14). The consecutive evaluations of the function $\Psi_{r,s}$ itself may lead to a zero or infinite result. The presence of the prefactor z_T cures this undesirable effect. One can locate the minimal collection of the factors in z_T which are needed to provide a finite result. In [IM], Isaev and Molev introduced the 'exponents' which control such factors for the Brauer algebra. In this Section we adapt the exponents to the situation of the walled Brauer algebra. The exponents for the walled Brauer algebra have simpler form than for the full Brauer algebra.

We need a general definition. Fix a Young diagram γ. We denote by $g_\gamma(k)$ the number of cells on the k-th diagonal of γ. We shall define a function $\vartheta_\gamma\colon \mathbb{Z}\to\{-1,0,1\}$ by the following rules.

- If, adding to γ the $(g_\gamma(k)+1)$-st cell to the k-th diagonal, we obtain a Young diagram then we set $\vartheta_\gamma(k)=-1$.
- If, removing from γ the $g_\gamma(k)$-st cell on the k-th diagonal, we obtain a Young diagram then we set $\vartheta_\gamma(k)=1$.

- Otherwise, $\vartheta_\gamma(k) = 0$.

Let $T = (\Lambda^{(0)}, \dots, \Lambda^{(n)})$ be a standard walled tableau. We will define the exponents $p_t(T)$, $t = 1, \dots, n$. If $\Lambda^{(t)}$ is obtained from $\Lambda^{(t-1)}$ by adding a box to the first or second diagram in the bipartition then we let $p_t(T) = 0$. Assume now that $\Lambda^{(t)}$ is obtained from $\Lambda^{(t-1)}$ by removing a box $\alpha = (i, j)$ from the first diagram in the bipartition. In particular, at this moment the wall is already crossed so the diagram $\lambda'(T)$ is defined. The exponents of T are defined by

$$p_t(T) := \vartheta_{\lambda'(T)}(i - j) \ . \tag{3.19}$$

We introduce now the rational function

$$\mathsf{ze}_T := \prod_{i=r+1}^{n} (u_i - c_i)^{p_i(T)} \ .$$

Proposition 7 *In the notation of Section 3.1, the consecutive evaluations of the function*

$$\mathsf{ze}_T \cdot \Psi_{r,s}$$

are finite.

If $p_i(T) \neq 0$ then the factor $(u_i - c_i)^{p_i(T)}$ is present in z_T. The consecutive evaluations of the product z_T/ze_T (of all other factors) are finite.

Note that before crossing the wall the exponents are equal to zero. This follows from the fusion procedure for the symmetric group [Mo], see also [IM].

The proof of Proposition 7 is in Section 4.2.

3.3 Second fusion procedure

Our second fusion procedure resembles the fusion procedure of [IMO] for the Brauer algebra.

Modified baxterized elements. Let h be an indeterminate. It will be convenient to use also the following modified functions:

$$s'_{i,j}(u; h) := 1 + \frac{s_{i,j}}{u - h} \quad \text{if} \ \ \varepsilon(i) + \varepsilon(j) \ \ \text{is even} \ ,$$

$$d'_{i,j}(u; h) := 1 + \frac{d_{i,j}}{u + h - \delta} \quad \text{if} \ \ \varepsilon(i) + \varepsilon(j) \ \ \text{is odd} \ .$$

In virtue of the equalities (2.11), we have

$$s'_{i,j}(u;h)s'_{i,k}(u-v;h)s_{j,k}(v) = s_{j,k}(v)s'_{i,k}(u-v;h)s'_{i,j}(u;h) \ ,$$

in virtue of the equalities (2.12),

$$d'_{j,i}(v;h)d'_{k,i}(u+v;h)s_{j,k}(u) = s_{j,k}(u)d'_{k,i}(u+v;h)d'_{j,i}(v;h) \ ,$$

and, in virtue of the equalities (2.13),

$$d_{i,j}(u)s'_{i,k}(u-v;h)d'_{k,j}(v;h) = d'_{k,j}(v;h)s'_{i,k}(u-v;h)d_{i,j}(u) \ .$$

In the sequel we omit the symbol h in the notation for brevity.

Second fusion procedure. We shall formulate the results in the notation of Subsection 3.1.1.

We define several more rational functions, in variables $u_{r+1},\dots,u_n$, with values in the algebra $\mathsf{B}_{r,s}(\delta)$. First, for j such that $r+s \geqslant j > r$ let

$$\mathring{\mathfrak{d}}'^{\uparrow}_j := d'_{1,j}(c_1-u_j)d'_{2,j}(c_2-u_j)\dots d'_{r,j}(c_r-u_j) \ .$$

Next, let

$$\mathring{\mathfrak{A}}_{r,s} := \mathring{\mathfrak{d}}^{\downarrow}_{r+1}\mathring{\mathfrak{d}}^{\downarrow}_{r+2}\dots\mathring{\mathfrak{d}}^{\downarrow}_n \ , \ \mathring{\mathfrak{A}}'_{r,s} := \mathring{\mathfrak{d}}'^{\uparrow}_{r+1}\mathring{\mathfrak{d}}'^{\uparrow}_{r+2}\dots\mathring{\mathfrak{d}}'^{\uparrow}_n \ .$$

Finally, let

$$\mathring{\Psi}_{n;T_r,h}(u_{r+1},\dots,u_n) := E_{T_r}\mathring{\mathfrak{A}}'_{r,s}\,\mathring{\mathfrak{S}}'_s\,\mathring{\mathfrak{A}}_{r,s}\,\mathring{\mathfrak{S}}_s \ ,$$

$$\mathring{\widetilde{\Psi}}_{n;T_r,h}(u_{r+1},\dots,u_n) := E_{T_r}\mathring{\mathfrak{A}}_{r,s}\,\mathring{\mathfrak{S}}'_s\,\mathring{\mathfrak{A}}'_{r,s}\,\mathring{\mathfrak{S}}_s \ ,$$

where $\mathring{\mathfrak{S}}_s$ is defined in (3.15) and

$$\mathring{\mathfrak{S}}'_s := \prod_{r+1\leqslant i<j\leqslant r+s} s'_{i,j}(u_i+u_j) \ .$$

The prefactor $\mathring{z}_T$ we replace with the following rational function in the variables $u_{r+1},\dots,u_n$:

$$\mathring{z}_{T;h} := \prod_{i=r+1}^{n}\frac{(u_i-c_i)(u_i-h+\delta)}{(u_i-\delta)(u_i+c_i-h)} \times \prod_{r<j<i\leqslant n}\frac{(u_i-u_j)^2}{(u_i-u_j)^2-1} \ . \tag{3.20}$$

Set

$$\mathring{\Psi}_{T;h}(u_{r+1},\dots,u_n) := \mathring{z}_{T;h}\cdot\mathring{\Psi}_{n;T_r,h}(u_{r+1},\dots,u_n) \ ,$$

$$\mathring{\widetilde{\Psi}}_{T;h}(u_{r+1},\dots,u_n) := \mathring{z}_{T;h}\cdot\mathring{\widetilde{\Psi}}_{n;T_r,h}(u_{r+1},\dots,u_n) \ .$$

Proposition 8 *The primitive idempotent E_T, corresponding to the standard walled Λ-tableau T, is found by any of the consecutive evaluations*

$$E_T = \mathring{\Psi}_{T;h}(u_{r+1},\dots,u_n)\big|_{u_{r+1}=c_{r+1}}\dots\big|_{u_n=c_n} \tag{3.21}$$

or

$$E_T = \mathring{\widetilde{\Psi}}_{T;h}(u_{r+1},\dots,u_n)\big|_{u_{r+1}=c_{r+1}}\dots\big|_{u_n=c_n}\ . \tag{3.22}$$

Remark 9 *The fusion procedure of Theorem 4 is the limit, as h tends to infinity, of the second fusion procedure, given in Proposition 8.*

4 Proofs

4.1 Proof of Theorem 4

We repeat that we assume that $s > 0$ because before crossing the wall our formulas reproduce the formulas for the symmetric groups from [Mo].

We shall often write $d_{i,j}(u,v)$ and $s_{i,j}(u,v)$ instead of $d_{i,j}(u+v)$ and $s_{i,j}(u-v)$.

We rewrite the function $\Psi_{r,s}$, defined by (3.14), in the form adapted to the consecutive evaluations. Let

$$\psi_n := d_{r,n}(u_r,u_n)\dots d_{1,n}(u_1,u_n)\cdot s_{r+1,n}(u_{r+1},u_n)\dots s_{n-1,n}(u_{n-1},u_n)\ . \tag{4.23}$$

Lemma 10 *We have*

$$\Psi_{r,s} = \Psi_{r,s-1}\cdot\psi_n\ .$$

Proof. Clearly, $\mathfrak{D}_{r,s} = \mathfrak{D}_{r,s-1}\cdot d_{1,n}(u_1,u_n)\dots d_{r,n}(u_r,u_n)$. The Yang–Baxter equations (2.12) imply the identity

$$d_{1,n}(u_1,u_n)\dots d_{r,n}(u_r,u_n)\cdot\mathfrak{S}_r = \mathfrak{S}_r\cdot d_{r,n}(u_r,u_n)\dots d_{1,n}(u_1,u_n)\ .$$

The well-known equality $\mathring{\mathfrak{S}}_s = \mathring{\mathfrak{S}}_{s-1}\cdot s_{r+1,n}(u_{r+1},u_n)\dots s_{n-1,n}(u_{n-1},u_n)$ and the commutativity relation

$$d_{r,n}(u_r,u_n)\dots d_{1,n}(u_1,u_n)\cdot\mathring{\mathfrak{S}}_{s-1} = \mathring{\mathfrak{S}}_{s-1}\cdot d_{r,n}(u_r,u_n)\dots d_{1,n}(u_1,u_n)\ ,$$

complete the proof. ■

We first analyze what happens when we cross the wall.

Lemma 11 *Let U be a standard walled tableau for the algebra $\mathsf{B}_{r,0}(\delta)$, that is, for the symmetric group $\mathbb{S}_r$. The following identity holds in the walled Brauer algebra $\mathsf{B}_{r,1}(\delta)$:*

$$E_U \cdot d_{1,r+1}(w-c_1)\dots d_{r,r+1}(w-c_r) = \frac{w-\delta+x_{r+1}}{w}\cdot E_U \ , \tag{4.24}$$

where $c_i = c_i(U)$, $i = 1,\dots,r$.

Proof. The proof is by induction in r. The induction base, for the algebra $\mathsf{B}_{1,1}(\delta)$, is straightforward.

Let $W \nearrow U$. By the recursive construction of the primitive idempotents for the symmetric group in [Mo] (which is exactly the 'before the wall' part of our formula), we have

$$E_U = b(v)\, E_W \cdot s_{1,r}(c_1,v)\dots s_{r-1,r}(c_{r-1},v)|_{v=c_r}$$

with some rational function $b(v)$; its precise expression is not important at the moment. Let $\xi = s_{1,r}(c_1,v)\dots s_{r-1,r}(c_{r-1},v)$. The Yang–Baxter equations (2.12) imply that

$$\begin{aligned}\xi \cdot d_{1,r+1}(w-c_1)\dots d_{r-1,r+1}(w-c_{r-1})\cdot d_{r,r+1}(w-v)\\ = d_{r,r+1}(w-v)\cdot d_{1,r+1}(w-c_1)\dots d_{r-1,r+1}(w-c_{r-1})\cdot \xi \ .\end{aligned}$$

Since

$$E_W\, d_{r,r+1}(w-v) = d_{r,r+1}(w-v)\, E_W \ ,$$

we can write the left hand side of (4.24) in the form

$$b(v) d_{r,r+1}(w-v)\, E_W \cdot d_{1,r+1}(w-c_1)\dots d_{r-1,r+1}(w-c_{r-1})\cdot \xi|_{v=c_r} \ .$$

The diagrams with the vertical line connecting the r-th upper and lower points linearly span the subalgebra $\mathcal{A}$ in $\mathsf{B}_{r,1}(\delta)$, isomorphic to $\mathsf{B}_{r-1,1}(\delta)$. Thus we can use the induction hypothesis and write

$$E_W \cdot d_{1,r+1}(w-c_1)\dots d_{r-1,r+1}(w-c_{r-1}) = \frac{w-d_{1,r+1}-\dots-d_{r-1,r+1}}{w}\cdot E_W \ .$$

Now,

$$d_{r,r+1}(w-v)\cdot \frac{w-d_{1,r+1}-\dots-d_{r-1,r+1}}{w}$$

$$= \frac{w - d_{1,r+1} - \cdots - d_{r-1,r+1}}{w} - \frac{d_{r,r+1} \cdot (w - d_{1,r+1} - \cdots - d_{r-1,r+1})}{w(w-v)}$$

$$= \frac{w - d_{1,r+1} - \cdots - d_{r-1,r+1}}{w} - \frac{d_{r,r+1} \cdot (w - s_{1,r} - \cdots - s_{r-1,r})}{w(w-v)}$$

$$= \frac{w - d_{1,r+1} - \cdots - d_{r-1,r+1}}{w} - \frac{d_{r,r+1} \cdot (w - x_r)}{w(w-v)}$$

$$= \frac{w - \delta + x_{r+1}}{w} - \frac{d_{r,r+1} \cdot (v - x_r)}{w(w-v)} \ .$$

Here in the second equality we used the formula $d_{r,r+1} d_{j,r+1} = d_{r,r+1} s_{j,r}$.

We have

$$b(v) \, \frac{d_{r,r+1} \cdot (v - x_r)}{w(v-w)} \cdot E_W \cdot \xi|_{v=c_r} = \frac{d_{r,r+1} \cdot (v - x_r)}{w(v-w)} \cdot E_U|_{v=c_r} \ ,$$

so we are done since $x_r E_U = c_r E_U$. ■

Lemma 12 *Let U be a standard walled tableau for the algebra $\mathsf{B}_{r,s-1}(\delta)$ with $s > 0$. Then*

$$E_U \cdot \zeta_n = \frac{u - x_n}{u - \delta} \cdot E_U \ , \tag{4.25}$$

where ζ_n is the following rational function in the variable u:

$$\zeta_n = s_{n-1,n}(u, c_{n-1}) \ldots s_{r+1,n}(u, c_{r+1}) \cdot d_{1,n}(\delta - u, -c_1) \ldots d_{r,n}(\delta - u, -c_r)$$

with $c_i = c_i(U)$, $i = 1, \ldots, n-1$.

Proof. We employ the induction on s. The induction base, for $s = 1$ is the formula (4.24). Let $W \nearrow U$. We have $E_U = E_U E_W$. Thus

$$E_U \cdot \zeta_n = E_U E_W \cdot s_{n-1,n}(u, c_{n-1}) \zeta'_n = E_U \cdot s_{n-1,n}(u, c_{n-1}) \cdot E_W \cdot \zeta'_n \ ,$$

where

$$\zeta'_n := s_{n-2,n}(u, c_{n-2}) \ldots s_{r+1,n}(u, c_{r+1}) \cdot d_{1,n}(\delta - u, -c_1) \ldots d_{r,n}(\delta - u, -c_r) \ .$$

The diagrams with the vertical line connecting the $(n-1)$-st upper and lower points linearly span the subalgebra $\mathcal{A}'$ in $\mathsf{B}_{r,s}(\delta)$, isomorphic to $\mathsf{B}_{r,s-1}(\delta)$. By the induction assumption,

$$E_W \cdot \zeta'_n = E_W \rho_n \ ,$$

where

$$\rho_n := \frac{u - (\delta - d_{1,n} - \cdots - d_{r,n} + s_{r+1,n} + \cdots + s_{n-2,n})}{u - \delta} \ .$$

So,

$$E_U \cdot \zeta_n = E_U \cdot s_{n-1,n}(u, c_{n-1}) \cdot E_W \cdot \rho_n = E_U E_W \cdot s_{n-1,n}(u, c_{n-1})\rho_n$$

$$= E_U \cdot s_{n-1,n}(u, c_{n-1})\rho_n \ .$$

Now,

$$s_{n-1,n}(u, c_{n-1})\rho_n = \left(1 - \frac{s_{n-1,n}}{u - c_{n-1}}\right)\rho_n = \rho_n - \frac{s_{n-1,n}}{u - c_{n-1}}\rho_n \ . \tag{4.26}$$

Since

$$\rho_n = \frac{u - x_n + s_{n-1,n}}{u - \delta} \quad \text{and} \quad s_{n-1,n}\rho_n = \frac{u - x_{n-1}}{u - \delta} s_{n-1,n} \ ,$$

we rewrite the right hand side of the formula (4.26) in the form

$$\frac{u - x_n + s_{n-1,n}}{u - \delta} - \frac{1}{u - c_{n-1}} \frac{u - x_{n-1}}{u - \delta} s_{n-1,n}$$

$$= \frac{u - x_n}{u - \delta} + \frac{1}{u - \delta}\left(1 - \frac{u - x_{n-1}}{u - c_{n-1}}\right) s_{n-1,n} \ ,$$

which completes the proof since $E_U x_{n-1} = c_{n-1} E_U$. ■

We define the following rational function in the variable $u = u_n$:

$$\psi_n^U := \psi_n|_{u_1 = c_1, \ldots, u_{n-1} = c_{n-1}}$$

where ψ_n is defined in (4.23).

Lemma 13 *The following identity holds:*

$$E_U \cdot \psi_n^U = \frac{u - \delta}{u - c_n} \prod_{i=r+1}^{n-1} \left(1 - \frac{1}{(u - c_i)^2}\right) E_U \frac{u - c_n}{u - x_n} \ . \tag{4.27}$$

Proof. The formula (4.27) is obtained from the formula (4.25) by using the equalities (2.9) and (2.10). ■

Proof of Theorem 4. Clearly,

$$z_T = z_U z_U^T \quad \text{where} \quad z_U^T = \frac{u_n - c_n}{u_n - \delta} \prod_{i=r+1}^{n-1} \frac{(u_i - u_n)^2}{(u_i - u_n)^2 - 1} \ . \tag{4.28}$$

Thus,

$$\Psi_T(u_1, \dots, u_{r+s})\big|_{u_1=c_1}\big|_{u_2=c_2} \dots \big|_{u_n=c_n} = \left(z_U^T\big|_{u_1=c_1,\dots,u_{n-1}=c_{n-1}} E_U \psi_n^U \right) \big|_{u_n=c_n}$$

$$= E_U \frac{u - c_n}{u - x_n}\big|_{u_n=c_n} = E_T$$

by (2.8). ■

4.2 Proof of Proposition 7

As for the fusion procedure itself, it is sufficient to analyze only the last evaluation $\dots\big|_{u_n=c_n}$. Let $U \nearrow T$. Since the last evaluation of the product $\Psi_T(u_1, \dots, u_n) = z_T \cdot \Psi_{r,s}$ is finite by Theorem 4, we only need to locate the dangerous factors (zeros and poles) in the function

$$z_U^T\big|_{u_1=c_1,\dots,u_{n-1}=c_{n-1}} = \frac{u_n - c_n}{u_n - \delta} \prod_{i=r+1}^{n-1} \frac{(u_n - c_i)^2}{(u_n - c_i)^2 - 1} \ . \tag{4.29}$$

We shall rewrite in another form the product

$$\varpi_U(u) := \prod_{i=r+1}^{n-1} \frac{(u - c_i)^2}{(u - c_i)^2 - 1} \ .$$

Note that $\varpi_U(u)$ depends only on the shape of the diagrams $\lambda'(U)$, $\nu(U)$ and $\lambda''(U)$. Indeed, the product $\prod_{i=r+1}^{n-1}(u - c_i)$ is the same as the product $\prod(u - c(\alpha))$ over all cells α of $\lambda'(U) \setminus \nu(U)$ and $\lambda''(U)$. The contents are constant along the diagonals, so each factor will appear with the multiplicity equal to the length of the corresponding diagonal. Taking into account the definitions (2.5) and (2.5) of the contents, we find

$$\prod_{i=r+1}^{n-1} (u - c_i) = \prod_{k \in \mathbb{Z}} (u + k)^{g_{\lambda'(U) \setminus \nu(U)}(k)} \times \prod_{k \in \mathbb{Z}} (u - k - \delta)^{g_{\lambda''(U)}(k)} \ .$$

The denominator of $\varpi_U(u)$ contains two products, with factors $(u - c_i - 1)$ and $(u - c_i + 1)$. Shifting correspondingly the index in each product, we find that the whole expression $\varpi_U(u)$ is equal to

$$\varpi_U(u) = \varpi'_U(u)\ \varpi''_U(u)\ ,$$

where

$$\varpi'_U(u) := \prod_{k\in\mathbb{Z}} (u+k)^{\Delta_{\lambda'(U)\backslash\nu(U)}(k)}\ \ ,\ \ \varpi''_U(u) := \prod_{k\in\mathbb{Z}} (u-k-\delta)^{\Delta_{\lambda''(U)}(k)}\ ,$$

and we denoted, for a diagram γ, the Laplacian of the function g_γ with the minus sign,

$$\Delta_\gamma(k) := 2g_\gamma(k) - g_\gamma(k+1) - g_\gamma(k-1)\ .$$

We analyze the function

$$\frac{u_n - c_n}{u_n - \delta}\ \varpi'_U(u_n)\ \varpi''_U(u_n)\ ,$$

depending on what happens at the n-th step.

- If T is obtained from U by adding a cell to the second diagram on a diagonal $\underline{k}$ then $c_n = \underline{k} + \delta$. The function $\varpi'_U(u_n)$ is regular at $u_n = c_n$ and the direct inspection shows that the function $\frac{u_n - c_n}{u_n - \delta}\ \varpi''_U(u_n)$ is regular at $u_n = c_n$ as well (similarly to the fusion for the symmetric group). Thus the last evaluation of the function $\Psi_{r,s}$ is finite, which corresponds to our statement that $p_n(T) = 0$ in this case.

- If T is obtained from U by removing a cell from the first diagram on a diagonal $\underline{k}$ then $c_n = -\underline{k}$. The function $\frac{1}{u_n - \delta}\varpi''_U(u_n)$ is regular at $u_n = c_n$. However the function $(u_n + \underline{k})\,\varpi'_U(u_n)$ may have singularities at $u_n = c_n$. The Laplacian Δ can take several values depending on the location of the diagonal $\underline{k}$. Different types of the location are illustrated on Figures 3, 4 and 5 (the diagonal is shown in red), and in each case the value $\Delta_{\lambda'(U)\backslash\nu(U)}(\underline{k})$ is given - it can be directly read off the corresponding figure. There is one more case when the diagonal runs into the horizontal line of the border of λ'; then, similarly to the case of the vertical line of the border λ', as on Figure 5, we have $\Delta_{\lambda'(U)\backslash\nu(U)}(\underline{k}) = -1$. In each case it is straightforward to see that the needed value $p_n(T)$ of the exponent is indeed given by (3.19).

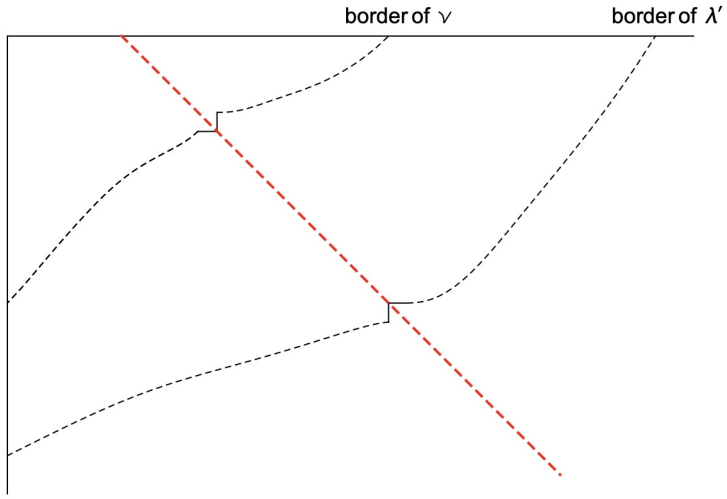

Figure 3: $\Delta_{\lambda'(U)\setminus\nu(U)}(\underline{k}) = -2$

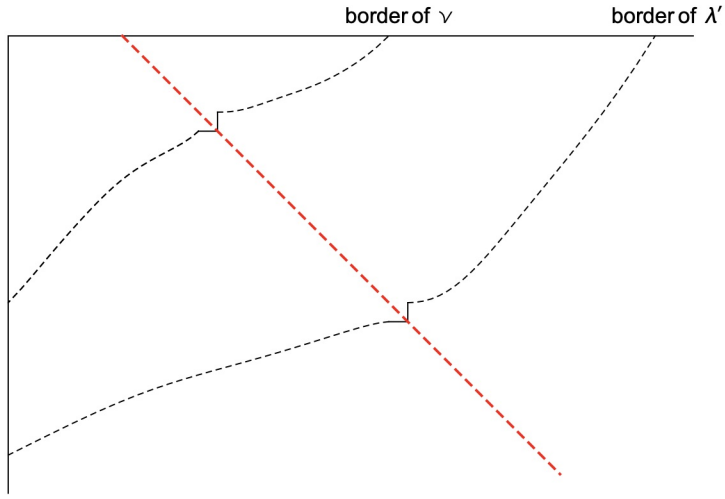

Figure 4: $\Delta_{\lambda'(U)\setminus\nu(U)}(\underline{k}) = 0$

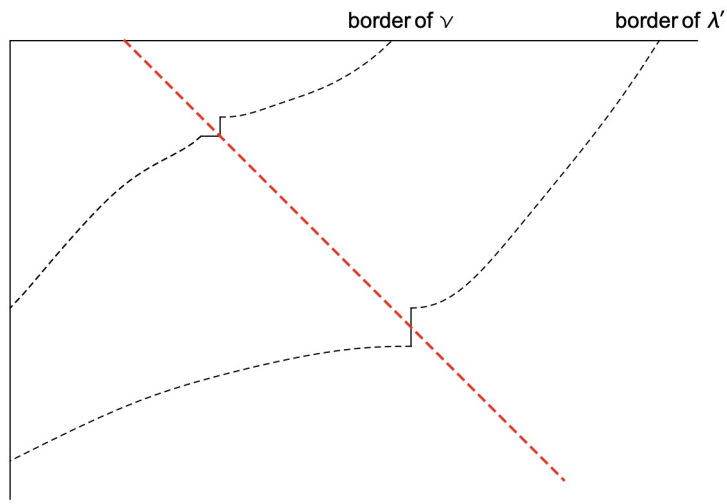

Figure 5: $\Delta_{\lambda'(U)\setminus\nu(U)}(\underline{k}) = -1$

The proof is completed. ■

4.3 Proof of Proposition 8

1. We prove the assertion (3.21). Some gymnastics, à la in the Proof of Lemma 10, with the baxterized elements leads to the recursion

$$\mathring{\Psi}_{n;T_r,h} = \mathring{\Psi}_{n-1;T_r,h} \cdot \mathring{s}'^{\downarrow}_n \mathring{\mathfrak{d}}'^{\uparrow}_n \mathring{\mathfrak{d}}^{\downarrow}_n \mathring{s}^{\uparrow}_n \ .$$

Here

$$\mathring{s}'^{\downarrow}_n := s'_{n-1,n}(u_{n-1}+u_n)s'_{n-2,n}(u_{n-2}+u_n)\dots s'_{r+1,n}(u_{r+1}+u_n)$$

and

$$\mathring{s}^{\uparrow}_n := s_{r+1,n}(u_{r+1}+u_n)s_{r+2,n}(u_{r+2}+u_n)\dots s_{n-1,n}(u_{n-1}+u_n) \ .$$

As before, it suffices to analyze the last evaluation $\dots\big|_{u_n=c_n}$. Extracting the factors containing u_n in the prefactor $\mathring{z}_{T;h}$, see (3.20), we see that we have to prove that for $U \nearrow T$ the evaluation of the expression

$$z'^T_U z^T_U E_U \cdot \mathfrak{X} \quad , \quad \text{with} \quad \mathfrak{X} := \left(\mathring{s}'^{\downarrow}_n \mathring{\mathfrak{d}}'^{\uparrow}_n \mathring{\mathfrak{d}}^{\downarrow}_n \mathring{s}^{\uparrow}_n\right)|_{u_{r+1}=c_{r+1},\dots,u_{n-1}=c_{n-1}} \ ,$$

at $u_n = c_n$ is equal to E_T. Here z_U^T is defined in (4.28) and $z_U'^T$ is the following rational function in u_n:

$$z_U'^T := \frac{u_n - h + \delta}{u_n + c_n - h} \ .$$

Lemma 12 implies that

$$E_U \cdot \left(\mathring{s}_n'^{\downarrow} \mathring{\mathfrak{d}}_n'^{\uparrow} \right) |_{u_{r+1}=c_{r+1},\ldots,u_{n-1}=c_{n-1}} = \frac{h - u_n - x_n}{h - u_n - \delta} \, E_U \ .$$

By the fusion procedure of Theorem 4, the evaluation of the expression

$$z_U^T E_U \cdot \left(\mathring{\mathfrak{d}}_n^{\downarrow} \mathring{s}_n^{\uparrow} \right) |_{u_{r+1}=c_{r+1},\ldots,u_{n-1}=c_{n-1}}$$

at $u_n = c_n$ equals E_T, and $x_n E_T = c_n E_T$, so we are done.

2. It is straightforward to see that the Jucys–Murphy elements are stable with respect to the anti-involution ι defined in (2.1). Therefore the idempotents E_T are stable with respect to ι as well. However, we have the identity

$$\iota \left(\mathring{\Psi}_{n;T_r,h} \right) = \mathring{\widetilde{\Psi}}_{n;T_r,h}$$

which implies the the assertion (3.22). ■

Acknowledgements. The work of D. B. was funded by Excellence Initiative of Aix-Marseille University – A*MIDEX and Excellence Laboratory Archimedes LabEx, French "Investissements d'Avenir" programmes. The work of O. O. was supported by the Program of Competitive Growth of Kazan Federal University and by the grant RFBR 17-01-00585.

References

[BCHLLS] G. Benkart, M. Chakrabarti, T. Halverson, R. Leduc, C. Lee, and J. Stroomer, *Tensor product representations of general linear groups and their connections with Brauer algebras* J. of Algebra **166**:3 (1994) 529–567.

[BS] J. Brundan and C. Stroppel, *Gradings on walled Brauer algebras and Khovanov's arc algebra*, Advances in Mathematics **231** (2012) 709–773.

[BGO] D. V. Bulgakova, Y. O. Goncharov and O. V. Ogievetsky, *Normal form for the walled Brauer algebra: construction and applications*, to appear.

[Ch] I. V. Cherednik, *A new interpretation of Gelfand–Tzetlin bases*, Duke Math. J. **54** (1987) 563–577.

[CVDM] A. Cox, M. De Visscher, S. Doty, and P. Martin, *On the blocks of the walled Brauer algebra*, J. Algebra **320**:1 (2008) 169–212.

[C] W. Cui, *Fusion procedure for cyclotomic BMW algebras*, Algebras and Representation Theory (2018) 1-14.

[GP] V. Guizzi and P. Papi, *A combinatorial approach to the fusion process for the symmetric group*, Europ. J. Comb. **19** (1998) 835–845.

[IM] A. P. Isaev and A. I. Molev, *Fusion procedure for the Brauer algebra*, St. Petersburg Math. J. **22**:3 (2011) 437–446.

[IMO] A. P. Isaev, A. I. Molev and O. V. Ogievetsky, *A New Fusion Procedure for the Brauer Algebra and Evaluation Homomorphisms*, International Mathematics Research Notices **2012**:11 (2012) 2571–2606. https://doi.org/10.1093/imrn/rnr126

[IMO2] A. P. Isaev, A. I. Molev and O. V. Ogievetsky. *Idempotents for Birman–Murakami–Wenzl algebras and reflection equation*, Advances in Theoretical and Mathematical Physics **18**:1 (2014) 1-25.

[IO] A. Isaev, O. Ogievetsky, *On representations of Hecke algebras*, Czechoslovak J. Phys., **55**:11 (2005) 1433-1441.

[IO2] A. P. Isaev and O. V. Ogievetsky, *Jucys–Murphy elements for Birman–Murakami–Wenzl algebras*, Physics of Particles and Nuclei Letters **8**:3 (2011) 394–407; arXiv:0912.4010 [math.QA]

[JK] J. H. Jung and M. Kim, *Supersymmetric polynomials and the center of the walled Brauer algebra*, Algebra Represent. Theory (2019). https://doi.org/10.1007/s10468-019-09922-3

[Ju] A. Jucys, *Factorization of Young projection operators for the symmetric group*, Lietuvos Fizikos Rinkinys **11** (1971) 5–10.

[K] K. Koike, *On the decomposition of tensor products of the representations of classical groups: by means of the universal characters*, Adv. Math. **74**:1 (1989) 57–86.

[Mo] A. I. Molev, *On the fusion procedure for the symmetric group*, Reports Math. Phys. **61** (2008) 181–188.

[Na] M. Nazarov, *Yangians and Capelli identities*, in Kirillov's Seminar on Representation Theory, G. I. Olshanski, ed., Amer. Math. Soc. Transl. **181**, Amer. Math. Soc., Providence RI (1998) 139–163.

[Na2] M. Nazarov, *Representations of twisted Yangians associated with skew Young diagrams*, Selecta Math. (N.S.) **10** (2004) 71–129.

[Ni] P. Nikitin, *The centralizer algebra of the diagonal action of the group $GL_n(\mathbb{C})$ in a mixed tensor space*, J. Math. Sci. **141** (2007) 1479–1493.

[OP] O. Ogievetsky, L. Poulain d'Andecy, *On representations of cyclotomic Hecke algebras*, Modern Phys. Lett. A, **26**:11 (2011) 795-803.

[OP2] O. Ogievetsky, L. Poulain d'Andecy, *On representations of complex reflection groups*, Theoret. Math. Phys., **174**:1 (2013), 95-108.

[OP3] O. Ogievetsky and L. Poulain d'Andecy, *Fusion procedure for Coxeter groups of type B and complex reflection groups $G(m,1,n)$*, Proceedings of the American Mathematical Society **142**.9 (2014) 2929–2941.

[OP4] O. Ogievetsky and L. Poulain d'Andecy, *Fusion procedure for cyclotomic Hecke algebras*, Sigma (Symmetry, Integrability and Geometry: Methods and Applications) **10** (2014) 039, 13 pages. http://dx.doi.org/10.3842/SIGMA.2014.039.

[OP5] O. V. Ogievetsky and L. Poulain d'Andecy, *Induced representations and traces for chains of affine and cyclotomic Hecke algebras*, Journal of Geometry and Physics **87** (2015) 354–372.

[SS] A. Sartori and C. Stroppel, *Walled Brauer algebras as idempotent truncations of level 2 cyclotomic quotients*, Journal of Algebra **440** (2015) 602–638.

[OV] A. Okounkov, A. Vershik, *A new approach to representation theory of symmetric groups II*, Selecta Math. (N.S.) **2**:4 (1996) 581-605.

[T] V. Turaev, *Operator invariants of tangles, and R-matrices*, Math. USSR-Izv. **35**:2 (1990) 411–444.