HAL open science

# Efficient Precoding for Massive MIMO Downlink under PA Nonlinearities

Rafik Zayani, Hmaied Shaïek, Daniel Roviras

**To cite this version:**

Rafik Zayani, Hmaied Shaïek, Daniel Roviras. Efficient Precoding for Massive MIMO Downlink under PA Nonlinearities. IEEE Communications Letters, 2019, 23 (9), 10.1109/LCOMM.2019.2924001 . hal-02447523v1

**HAL Id: hal-02447523**

**https://hal.science/hal-02447523v1**

Submitted on 3 May 2021 (v1), last revised 27 Apr 2021 (v2)

**HAL** is a multi-disciplinary open access archive for the deposit and dissemination of scientific research documents, whether they are published or not. The documents may come from teaching and research institutions in France or abroad, or from public or private research centers.

L'archive ouverte pluridisciplinaire **HAL**, est destinée au dépôt et à la diffusion de documents scientifiques de niveau recherche, publiés ou non, émanant des établissements d'enseignement et de recherche français ou étrangers, des laboratoires publics ou privés.

# Efficient Precoding for Massive MIMO Downlink under PA Nonlinearities

Rafik Zayani, *Member, IEEE*, Hmaied Shaïek, *Member, IEEE*, and Daniel Roviras, *Senior Member, IEEE*

**Abstract**

This letter investigates the compensation of the power amplifier (PA) nonlinear distortion (NLD) in large-scale multi-user (MU) multiple-input multiple-output (MIMO) downlink systems. We introduce a PA-aware precoding approach that exploits the high-dimensional degrees of freedom (DoFs), allowed by equipping the base station (BS) by a high number of antennas, and performs the precoded signals that, when amplified and passed through the channel, guarantee excellent transmission quality. Specifically, we formulate the proposed PA-aware precoding approach as a simple convex optimization problem which enables efficient, low-complexity and reliable algorithm implementations. The simulation results demonstrate the strong potential of the proposed approach in terms of improving the link quality and reducing the required computational complexity.

## I. Introduction

Massive multiple-input multiple-output (MIMO) systems, which simultaneously serve tens of users with base stations (BS) equipped with hundred of antennas using MU precoding, are the most ultimate enablers of enhanced energy and spectral efficiency in future generations of wireless communications [1]. However, signals generated by massive MU-MIMO precoders suffer from the high peak-to-average power ratio (PAPR), independently of whether single-carrier or multi-carrier transmission is adopted [2]. Accordingly, the nonlinearity of the radio frequency (RF) PA, which is the main hardware impairment and is expected to be low-cost and energy-efficient component to enable cost- and energy-efficient massive MU-MIMO BS deployments, yields harmful in-band distortion and out-of-band radiation (OBR). In [3] and [4], the impact of the PA nonlinear distortion is investigated in massive MU-MIMO downlink. The effect of nonlinear PA on the energy-efficient design of massive MIMO is studied in [5] and the spatial characteristic of the nonlinear distortion radiated from antenna arrays is shown in [6]. It has been demonstrated that OBR does not constitute a significant impairment and that the in-band distortion effects do not disappear by increasing the number of antennas, i.e. the received signal-to-interference-plus-noise ratio (SINR) remains finite, which could be either quite large or small depending on many parameters, like number of served users, power allocation and the frequency-selectivity of the channel. More recently, some approaches have been studied, in literature, aiming to reduce the above-mentioned nonlinear distortions [7] [8] [9]. All these studied methods, which are based on digital predistortion (DPD), aim to compensate for the PA nonlinear behaviour. However, the implementation of DPDs in massive MU-MIMO systems is challenging for the reason that the use of high-precise DPDs is computationally impractical, when considering large array transmitters. In [9], authors proposed a DPD based solution that takes advantage of the high-dimensional spatial DoFs of massive MU-MIMO to guarantee very good energy efficiency of the low-cost PAs in massive MIMO with low-complexity DPDs. However, the associated computational is still unsatisfying and limits its practical application in massive MU-MIMO. In [8], authors proposed a DPD based solution that requires only one DPD component per user to linearize an arbitrary number of PAs enabling then the reduction of the complexity associated to the linearization of the different used PAs.

Despite the good enhancements provided by these proposed methods, an extremely low-complexity solution, that does not require any DPD, is needed to enable ultra-low latency and highly energy-efficient massive MU-MIMO communications. Therefore, this letter introduces a new downlink transmission approach to address the PA nonlinearity issue in wireless massive MU-MIMO systems. We introduce a PA-aware precoding scheme that is formulated as a simple convex optimization problem that enables efficient and reliable algorithm implementations. The aim of the proposed approach is to optimize precoded signals that, when amplified and then passed through the channel, guarantee ideal transmission quality.

The remainder of this letter is organized as follows. The system model and basic modeling of PA nonlinear distortion in massive MU-MIMO are provided in Section II. Then, existing DPD based solutions are presented. In Section III, the proposed PA-aware precoding scheme is formulated as a simple convex optimization problem and the developed algorithm is presented. Section IV is dedicated for computational complexity analysis. Section V is devoted to the simulation results. Finally, Section VI gives the conclusion.

*Notations* : Lowercase boldface letters (e.g. $\mathbf{x}$) denote column vectors and bold uppercase letters (e.g. $\mathbf{X}$) stand for matrices. We denote transpose, conjugate transpose and pseudo-inverse of a matrix by $\mathbf{X}^T$, $\mathbf{X}^H$ and $\mathbf{X}^\dagger$, respectively. $\mathbf{I}_N$ and $\mathbf{0}_{M\times N}$ stand for the $N \times N$ identity matrix and the $M \times N$ all-zeros matrix, respectively. $\|\mathbf{x}\|_2$ is used to denote $l_2$-norm of vector $\mathbf{x}$ and $\mathbb{E}[.]$ for the expectation operator.

## II. Massive MU-MIMO under PA Nonlinearities

### A. Basic Signal and Impairment Model

We consider a single-cell massive MU-MIMO downlink system where the BS is equipped with $M_t$ transmit antennas and simultaneously serves $M_r$ single-antenna users. Here, each antenna is equipped with a power amplifier (PA). Assuming full downlink channel knowledge, in terms of the $M_r \times M_t$ channel matrix $\mathbf{H}$ which can be written through its transpose as $\mathbf{H}^T = [\mathbf{h}_1, \mathbf{h}_2, ..., \mathbf{h}_{M_r}]$ where the $M_t \times 1$ vector $\mathbf{h}_{m_r}$ refers to the spatial channel coefficients from the BS antenna array to the user $m_r$. The $M_r \times 1$ signal vector $\mathbf{s} = [s_1, s_2, ..., s_{M_r}]$ contains the symbols for $M_r$ users, where $s_{m_r}$ is chosen from a

complex-valued constellation $\mathcal{A}$. Using the knowledge of CSI, the BS precodes vector $\mathbf{s}$ into a $M_t$-dimensional vector with a $M_t \times M_r$ precoding matrix $\mathbf{W} = [\mathbf{w}_1, \mathbf{w}_2, ..., \mathbf{w}_{M_r}]$ as

$$\mathbf{x} = \frac{1}{\sqrt{\varsigma_W}} \mathbf{W}\mathbf{s} \tag{1}$$

where $\frac{1}{\sqrt{\varsigma_W}}$ is a normalization factor designed to obtain an average transmit power equal to $P_t$.

For the case of the massive MU-MIMO with non-linear PAs, the precoded symbols in (1) are fed, towards the BS antennas, through $M_t$ parallel transmit chains with power amplifiers (PAs). The resulting amplified symbols are

$$\mathbf{y} = [f_1(x_1), f_2(x_2), ..., f_{M_t}(x_{M_t})]^T = F(\mathbf{x}) \tag{2}$$

where $f_{m_t}(.)$ denotes the nonlinear amplification operation of the $m_t$-th PA. Finally, the input-output relationship of the MU-MIMO dwnlink system with nonlinear PAs can be denoted as

$$\mathbf{r} = \mathbf{H}\mathbf{y} + \mathbf{z} \tag{3}$$

where $\mathbf{z} \in \mathbb{C}^{M_r \times 1}$ denotes the receiver noise whose entries are i.i.d circularly-symmetric complex Gaussian distribution with zero-mean and variance $N_0/2$.

In practice, the PAs are usually nonlinear, especially when it is operated close to 1-dB compression point to increase power efficiency. Now, we let $x_{m_t}(n) = \rho(n)e^{j\phi(n)}$ be the $n$-th sampling point that is to be transmitted and amplified via antenna $m_t$, where $\rho(n)$ and $\phi(n)$ denote, respectively, the magnitude and phase of that symbol. Then, the relation between the baseband equivalent input and output signals of the PA in the $m_t$-th antenna branch can be written as

$$y_{m_t}(n) = g\left(\alpha\rho(n)\right) e^{j(\phi + \Psi(\alpha\rho(n)))} \tag{4}$$

where $g(.)$ is the amplitude-to-amplitude (AM-AM) conversion and $\Psi(.)$ the amplitude-to-phase (AM-PM) conversion of the PA. The factor $\alpha$ is a multiplicative coefficient applied at the input of the PA for an operating point with a given input back-off (IBO). Here, all IBOs are given in dB relatives to the back-off from 1-dB compression point, where the output signal is 1-dB weaker than what it would have been if the amplification was perfectly linear. The factor $\alpha$ needed to ensure a signal $x_{m_t}(n)$ with a given IBO value is $\alpha = \sqrt{\frac{P_{1dB}}{10^{\frac{IBO}{10}} P_t}}$. For now, the conversions $g(\rho)$ and $\Psi(\rho)$ are modelled by the modified Rapp model [10] proposed by the 3GPP for the New Radio (NR) evaluation. In modified Rapp, which resembles closely to realistic PAs, AM/AM and AM/PM conversions can be given by

$$g(u) = \frac{Gu}{\left(1 + \left|\frac{Gu}{V_{sat}}\right|^{2p}\right)^{\frac{1}{2p}}}, \qquad \Psi(u) = \frac{Au^q}{\left(1 + \left(\frac{u}{B}\right)^{2p}\right)} \tag{5}$$

where $u$ is the magnitude of the input signal, $G$ is small signal gain, $V_{sat}$ is saturation level, $p$ is the smoothness factor and $A$, $B$ and $q$ are fitting parameters. Neglecting the memory can be justified as we are primarily looking for how the basic PA nonlinear distortion are processed and tackled towards high energy efficient massive MU-MIMO downlink.

### *B. PA linearization techniques: DPD Concept and Solutions*

The DPD targets at cascading the PA and its inverse response toward a linear response for the combined DPD-PA block. Thus, an extra nonlinear function is needed to pre-process the PA input signal and thus linearize the amplified signal. In this work, two indirect learning architectures (ILAs) based on DPD, that were studied in [9], are considered for the used massive MU-MIMO system (see Fig. 1). The first ILA, referred to as ILA1, the DPD-PA structure is duplicated for each RF chain in the massive MU-MIMO transmitters and associated algorithm is deployed to update independently each DPD. Here, the conventional zero-forcing (ZF) precoding scheme is considered, where the corresponding precoder is $\mathbf{W} = \mathbf{H}^H \left(\mathbf{H}\mathbf{H}^H\right)^{-1}$. Using this classical ILA1, a high-precise, i.e. high complexity, DPD structure is required to extend the operation of the PA into weakly nonlinear region, but its practical application for massive MIMO is limited due to the associated computational complexity. In order to enable the use of low-complexity DPD, an improved ILA is proposed [9], which referred to as ILA2. It takes advantage of the high-dimensional spatial DoFs of massive MIMO to guarantee very good energy efficiency of the low-cost PAs in massive MIMO even with low-precise DPD. The key idea consists in finding the appropriate MU precoder for the adopted DPD. Therefore, we modify the classical ILA1 by incorporating the channel matrix and adaptive ZF precoder ($\mathbf{P}$) in the feedback path as shown in Fig. 1 and we update the precoder parameter (i.e., $\mathbf{W}$ coefficients) by copying the new estimate parameter of $\mathbf{P}$. Here, the model parameter $\mathbf{P}$ is estimated using an iterative algorithm, where the search direction of the steepest descent method at the iterate $\mathbf{P}_k$ is determined by the negative gradient of the cost function $\|\mathbf{P}\mathbf{r} - \mathbf{x}\|^2$. Then, the precoder matrix is adjusted as

$$\mathbf{P}_{k+1} = \mathbf{P}_k - \lambda \times 2\left(\mathbf{P}_k\mathbf{r}_k - \mathbf{x}_k\right)\mathbf{r}_k^H \tag{6}$$

where $\lambda$ is the updating rate.

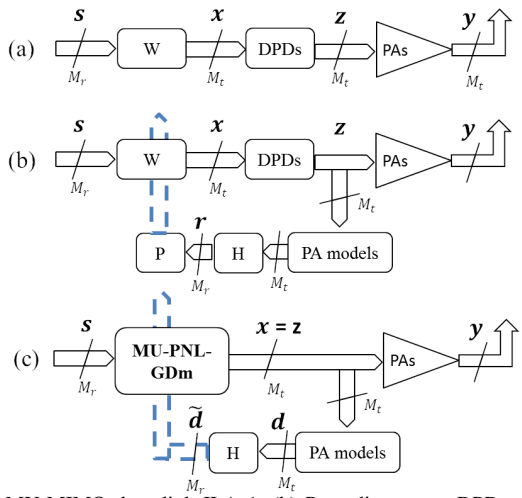


Fig. 1. (a) Conventional DPD for massive MU-MIMO downlink ILA 1. (b) Precoding-aware DPD solution ILA2 [9]. (c) The proposed MU-PNL-GDm, combines MU precoding and PA nonlinearities compensation.

## III. Proposed Joint MU Precoding and Nonlinear Distortion Compensation Algorithm

The key idea of the proposed PA-aware precoding approach is to exploit the excess DoFs in massive MU-MIMO system and to jointly perform MU precoding and PA nonlinearity mitigation. Therefore, it works toward at computing the precoded symbols $\mathbf{x}$ that satisfy $\mathbf{Hy} = \mathbf{s}$ (where $\mathbf{y}$ is the amplified version of $\mathbf{x}$). Here, we formulate a simple convex optimization problem that enables efficient, low-complexity and reliable algorithm implementations.

### A. Problem Formulation

For the nonlinear massive MU-MIMO sytem as introduced in (3), one can formulate the MU precoding problem by minimizing the mean square error (MSE) between the intended signal $\mathbf{s}$ and the amplified precoded signal $\mathbf{y}$ through the channel $\mathbf{H}$ as follows

$$\begin{aligned} \underset{\mathbf{x}}{minimize} \quad & \mathbb{E}\left[\|\mathbf{s} - \mathbf{H}F(\mathbf{x})\|^2\right] \\ subject \ \ to \quad & \mathbb{E}\left[\|\mathbf{x}\|^2\right] \leq P_t \end{aligned} \tag{7}$$

It is difficult to address the problem in (7) directly because of the nonlinear operation induced by PAs. Since we are dealing with precoded signals, PA input signals are complex Gaussian. Then, by using the well-known Bussgang theorem [11], one can decompose the nonlinear signal at the PA output into a linear function of the PA input and an uncorrelated distortion term. Then, we can write the amplified signal at each branch as $y_{m_t} = q_{m_t} x_{m_t} + d_{m_t}$, where $q_{m_t}$ is the $m_t$-th PA complex gain and $d_{m_t}$ stands for the added zero-mean distortion noise with variance $\sigma_d^2$. It is worth to mention that all PAs are operated with the same IBO to balance the power consumptions between different branches in massive MIMO BS. Specifically, by means of mathematical derivation [11], these NLD parameters ($q_{m_t}$ and $\sigma_d^2$) can be analytically computed for any measured or modelled PA. Then, we can write the amplified signal in (2) as

$$\mathbf{y} = \mathbf{Qx} + \mathbf{d} \tag{8}$$

where $\mathbf{Q} = diag\left([q_1, q_2, ..., q_{M_t}]\right)$ is the $M_t \times M_t$ square diagonal matrix with elements of $\{q_{m_t}\}$ on the diagonal.

Substituting (8) in (3), we have

$$\mathbf{r} = \mathbf{HQx} + \mathbf{Hd} + \mathbf{z} \tag{9}$$

### B. Enhanced zero-forcing (EZF)

Note that one can solve the precoding problem with enhanced ZF (EZF) that takes into consideration the average amplitude and phase distortions. Then, the precoder-weights of EZF need to satisfy the constraint $\mathbf{QHW} = \mathbf{I}_{M_r}$ leading to a precoding matrix

$$\mathbf{W} = \mathbf{Q}^H \mathbf{H}^H \left(\mathbf{HQQ}^H \mathbf{H}^H\right)^{-1} \tag{10}$$

This EZF can not remove the distortion noise, despite it has high computational complexity.

### C. PA-aware precoding scheme

Alternatively, iterative precoding algorithm could achieve higher performance gain with lower computational complexity. By minimizing the mean square error (MSE) of intended symbols $\mathbf{s}$ and PA outputs $\mathbf{y}$ through the channel $\mathbf{H}$, the PA-aware precoding problem can be formulated as

$$\begin{aligned} \underset{\mathbf{x}}{minimize} \quad & J(\mathbf{x}) = \|\mathbf{HQx} + \mathbf{Hd} - \mathbf{s}\|_2^2 \\ subject\ \ to \quad & \|\mathbf{x}\|_2^2 \leq P_t \end{aligned} \tag{11}$$

Note that the proposed formulation will enable an efficient iterative NLD mitigation algorithm that aims to search for symbols $\{x_{m_t}\}$ which, when amplified and then passed through the channel, can guarantee excellent transmission quality. To do that, we generate a local replica of the intended users received distortion vector at the transmitter side, such that it can be used to adapt the precoded vector $\mathbf{x}$ and would be cancelled when this latter is amplified and passed through the channel. In order to compute the feedback distortion vector, we use an initial estimate of precoded vector $\mathbf{x}^0$ using the PA direct approximated models which introduce the NLD onto the feedback signal in a similar manner as the true PAs in the actual transmission, that is expressed as $\mathbf{d} = F(\mathbf{x}) - \mathbf{Qx}$. Then, the channel estimates $\mathbf{H}$ reproduce the distortion vector $\tilde{\mathbf{d}} = \mathbf{Hd}$ at the receivers emulating the true propagation. This estimated distortion vector is taken into account, and a new estimation of the precoded vector $\mathbf{x}$ can be obtained. This second estimate $\mathbf{x}^1$ can be used to re-estimate the distortion vector. This process can be iteratively performed until some specific bound is reached. Therefore, an alternating estimation to solve (11), in which we estimate $\mathbf{x}$ by minimizing the cost function $J(\mathbf{x})$ with respect to $\mathbf{x}$ and estimate the distortion vector through the feedback path. Thus, the alternating procedure, in the $(l+1)$-th iteration, can be expressed as

$$\mathbf{x}^{(l+1)} = \underset{\{\mathbf{x}\}}{argmin} \quad J(\mathbf{x}^{(l)}, \mathbf{d}^{(l)}), \tag{12}$$

$$and \quad \mathbf{d}^{(l+1)} = F\left(\mathbf{x}^{(l+1)}\right) - \mathbf{Qx}^{(l+1)} \tag{13}$$

By doing so, the considered optimization problem lends itself to efficient, yet flexible implementation for massive MU-MIMO based systems by avoiding the use of DPDs and enabling low-complexity first order algorithm that only requires matrix-vector multiplications. The search directions of the steepest gradient descent (GD) method at the iterate $\mathbf{x}^{(l+1)}$ is determined by the negative gradient of the cost function $J$ at $\mathbf{x}^{(l)}$, which is given by

$$\nabla_x J(\mathbf{x}^{(l)}, \mathbf{d}^{(l)}) = 2\mathbf{Q}^H\mathbf{H}^H\left(\mathbf{HQx}^{(l)} + \mathbf{Hd}^{(l)} - \mathbf{s}\right) \tag{14}$$

In order to enhance the convergence rate of our algorithm, we consider the gradient descent with momentum (GDm). We do this by adding a fraction $\mu$ of the update vector of the past time step to the current update vector. Then, the precoded vector is adjusted as

$$\mathbf{x}^{(l+1)} = \mathbf{x}^{(l)} - \Delta\mathbf{x}^{(l)} \tag{15}$$

where $\Delta\mathbf{x}^{(l)} = \lambda\nabla_x J(\mathbf{x}^{(l)}, \mathbf{d}^{(l)}) + \mu\Delta\mathbf{x}^{(l-1)}$. The proposed algorithm, referred to as MU-PNL-GDm, is summarized as follows

**Algorithm**: The MU-PNL-GDm algorithm

Given a set of $M_r$ modulated complex symbols $\mathbf{s}$.

**Initialize** $\mathbf{x}^{(1)} = \mathbf{0}_{M_t\times 1}$, $\mathbf{d}_n^{(1)} = \mathbf{0}_{(M_r)\times 1}$, $\Delta\mathbf{x}^{(0)} = \mathbf{0}_{M_t\times 1}$, and set the maximal number of iterations $maxIter$, the learning rate $\lambda$ and the momentum coefficient $\mu$
**for** l=1,...,$maxIter$ **do**
$\Delta\mathbf{x}^{(l)} = 2\lambda\mathbf{Q}^H\mathbf{H}^H\left(\mathbf{HQx}^{(l)} + \mathbf{Hd}^{(l)} - \mathbf{s}\right) + \mu\Delta\mathbf{x}^{(l-1)}$
$\mathbf{x}^{(l+1)} = \mathbf{x}^{(l)} - \Delta\mathbf{x}^{(l)}$
Adjustment of the power of $\mathbf{x}^{(l+1)}$ to the desired IBO.
$\mathbf{d}^{(l+1)} = F(\mathbf{x}^{(l+1)}) - \mathbf{Qx}^{(l+1)}$
**end for**
**return** $\mathbf{x}^{(maxIter+1)}$

## IV. Computational Complexity Analysis

In this section, we present an analysis of the computational complexity of the MU-PNL-GDm algorithm and its comparison against the other studied solutions (ILA1 et ILA2) where a dedicated DPD block per antenna branch is used. Here, the DPD is based on the well-known multi-layer perceptron (MLP) neural network (NN) model associated with the Levenberg-Marquardt (LM) algorithm (for more details, interested readers are referred to [12]). The NN predistorter has two layers, one hidden layer with $N_h$ neurons, two neurons in the output layer and two input/output signals ($N_i = 2$ and $N_o = 2$), namely the $I$ and $Q$ components of the input/output signal complex envelopes. It is interesting to mention that RF PA modeling is needed for all studied schemes. This is one of the most critical challenges requiring high computational complexity. To guarantee a fair complexity comparison, we consider only the operations performed by each scheme only during the on-line transmission. Here, we consider that PA estimation and DPD learning are done off-line and their complexity is not taken into account. Interested reader is referred to [9]. The complexities resulting from applying the different schemes are summarized in Table I. Here, the

transmitter performs one or many of the different processing mentioned in Table I. We adopt the number of floating point operations (FLOPs) as a complexity measure, where one complex multiplication requires 6 FLOPs and a complex addition requires 2 FLOPs [8].

TABLE I Complexity Analysis

| Algo. | **MU-PNL-GDm** | **ILA**2 | **ILA**1 | **EZF** |
|---|---|---|---|---|
| ZF prec. | - | $6 \times \left(2M_tM_r^2 + M_r^3\right)$ | $6 \times \left(2M_tM_r^2 + M_r^3\right)$ | $6 \times \left(2M_tM_r^2 + M_r^3 + 3M_t\right)$ |
| DPD main proc. | - | $N_{iter} \times M_t\left(N_h(N_i + N_0 + 1) + N_0\right)$ | $M_t\left(N_h(N_i + N_0 + 1) + N_0\right)$ | - |
| Prec. update | - | $N_{iter} \times 6\left(3M_tM_r\right)$ | - | - |
| Prec. vector update | $N_{iter} \times 6\left(3M_tM_r + 3M_t\right)$ | $N_{iter} \times 6M_tM_r$ | $6M_tM_r$ | $6M_tM_r$ |

## V. Simulation Results and Analysis

In order to give a demonstration of the proposed algorithm efficiency in enhancing massive MU-MIMO precoding toward highly power-efficient PAs, some simulations have been conducted. The considered massive MU-MIMO has $M_t = 100$ antennas at the BS that serves $M_r = 10$ single-antenna users. We consider 16-quadrature amplitude modulation (16-QAM) with Gray mapping. The PA input and output are assumed to obey the memoryless modified Rapp model (equations 5) with parameters $G = 16$, $V_{sat} = 1.9$, $p = 1.1$, $A = -345$, $B = 0.17$ and $q = 4$ [10]. It is worth to mention that the proposed algorithm can still work when the PA memory effect is not neglected. This can be done by modeling the memory PA by a Hammerstein model [12] that leads to an optimal solution by incorporating the finite impulse response (FIR)-filter of the PA into the channel filter. For ILA1, the DPD is a MLP with $N_h = 10$ while the NN-DPD in ILA2 has only $N_h = 5$. All the simulation results are averaged over 1000 channel realizations. The multi-user interference (MUI) experienced by the $M_r$ receivers is measured as the difference between the actual noise-free received signal and the intended symbols and is expressed as $MUI = \frac{\|\mathbf{r}-\mathbf{s}\|_2^2}{\|\mathbf{s}\|_2^2}$. We compare the performance of the proposed algorithm and the other involved architectures in terms of MUI. The enhanced ZF precoder in (10), denoted as EZF, is regarded as the benchmark. Table II shows the MUI and complexity comparison for three different values of IBO (0dB and 3dB). Regarding results in Table II, one can note that ILA1 can only outperform the EZF in the case when we operate the PA quite far from its saturation region (i.e, IBO=3dB). Otherwise, for low values of IBO, it has the worst MUI performance. Thus, using DPD in the classical way does not have a great interest when the IBO is low. Note that ILA2 and the proposed MU-PNL-GDm, which exploits the excessive DoFs in massive MU-MIMO, provide very good and satisfying performance achieving gains of about 15 and 10dB over the classical ILA1 and EZF, for IBO=0 and 3dB. It is worth to mention that the achieved gain is more pronounced when IBO goes lower. Most importantly, we note that the proposed MU-PNL-GDm scheme requires about 55% of the computational complexity needed by ILA2, when achieving the same MUI performance.

## VI. Conclusion

We investigated a PA-aware precoding scheme in massive MU-MIMO downlink systems. We developed an efficient algorithm, referred to as MU-PNL-GDm, to perform the MUI interference and PA nonlinearities cancellation. The motivation of our approach is the high-dimensional DoFs offered by the massive MIMO downlink. This enables us to device precoded signals that, when amplified and passed through the channel, guarantee excellent transmission quality. The simulation results showed that the proposed algorithm can allow very good and satisfying performance while it requires lower computational complexities compared with the existing DPD based solutions.

## VII. Acknoledgment

This work was supported in part by the framework of the ADAM5 Project receiving fund by the European Union under H2020-EU.1.3.2 with funding scheme MSCA-IF-EF-ST under Project 796401, and in part by the Scholarship of Sorbonne Université, Paris, France.

## References

[1] E. G. Larsson, O. Edfors, F. Tufvesson, and T. L. Marzetta, "Massive MIMO for next generation wireless systems," *IEEE Commun. Mag.*, vol. 52, no. 2, pp. 186–195, Feb. 2014.

[2] C. Mollén, E. G. Larsson, and T. Eriksson, "Waveforms for the massive MIMO downlink: Amplifier efficiency, distortion, and performance," *IEEE Trans. Commun.*, vol. 64, no. 12, pp. 5050–5063, Dec. 2016.

[3] Y. Zou *et al.*, "Impact of power amplifier nonlinearities in multi-user massive MIMO downlink," in *Proc. IEEE Globecom Workshops*, pp. 1–7, Dec. 2015.

[4] J. Guerreiro, R. Dinis, and P. Montezuma, "Massive MIMO with nonlinear amplification: Signal characterization and performance evaluation," in *Proc. IEEE Globecom Conference*, pp. 1–6, Dec. 2016.

[5] A. A. Khan, P. Uthansakul, P. Duangmanee, and M. Uthansakul, "Energy efficient design of massive mimo by considering the effects of nonlinear amplifiers," *MDPI Energies*, vol. 11, no. 5, Sep. 2018.

[6] C. Mollén, U. Gustavsson, T. Eriksson, and E. G. Larsson, "Spatial characteristics of distortion radiated from antenna arrays with transceiver nonlinearities," *IEEE Trans. Wireless Commun.*, vol. 17, no. 10, pp. 6663–6679, Oct. 2018.

TABLE II MUI [dB] performance comparison

| | **IBO=0dB** | | | **IBO=3dB** | | |
|---|---|---|---|---|---|---|
| Scheme | Niter | MUI | Complexity | Niter | MUI | Complexity |
| EZF | - | -25.41 | 127800 | - | -29.87 | 127800 |
| ILA1 | - | -23.39 | 137200 | - | -35.03 | 137200 |
| ILA2 | 3 | -43.11 | 206100 | 2 | -44.65 | 179400 |
| MU-PNL-GDm | 6 | -40.11 | 118800 | 5 | -42.15 | 99000 |

[7] M. Abdelaziz, L. Anttila, A. Brihuega, F. Tufvesson, and M. Valkama, "Digital predistortion for hybrid MIMO transmitters," *IEEE J. Sel. Topics in Signal Process.*, vol. 12, no. 3, pp. 445–454, June 2018.

[8] A. Brihuega, L. Anttila, M. Abdelaziz and M. Valkama, "Digital Predistortion in Large-Array Digital Beamforming Transmitters," in *Proc. 52nd Asilomar Conf. on Signals, Systems, and Computers*, pp. 611-618, Oct. 2018.

[9] M. Yao, M. Sohul, R. Nealy, V. Marojevic, and J. Reed, "A digital predistortion scheme exploiting degrees-of-freedom for massive mimo systems," in *Proc. IEEE Int. Conf. on Comm.*, pp. 1–5, May 2018.

[10] Nokia. R4-163314, "realistic power amplifier model for the new radio evaluation," 3GPP TSG-RAN WG4 Meeting 79, 2016.

[11] H. Shaiek, R. Zayani, Y. Medjahdi, and D. Roviras, "Analytical analysis of SER for beyond 5G post-OFDM waveforms in presence of high power amplifiers," *IEEE Access*, vol. 7, pp. 29441–29452, 2019.

[12] R. Zayani, R. Bouallegue, and D. Roviras, "Adaptive predistortions based on neural networks associated with levenberg-marquardt algorithm for satellite down links," *EURASIP J. Wireless Commun. and Net.*, vol. 2008, no. 1, pp. 132729, Jul. 2008.