HAL open science

Centrifuge test on instrumented FBGs monopile foundation in sand

Matthieu Blanc, Zhong-Sen Li, Luc Thorel

To cite this version:

Matthieu Blanc, Zhong-Sen Li, Luc Thorel. Centrifuge test on instrumented FBGs monopile foundation in sand. ECSMGE 2019, 17th European Conference on Soil Mechanics and Geotechnical Engineering, Sep 2019, Reykjavik, Iceland. 8 p, 10.32075/17ECSMGE-2019-0263 . hal-02430597v2

HAL Id: hal-02430597

https://hal.science/hal-02430597v2

Submitted on 19 Apr 2021

HAL is a multi-disciplinary open access archive for the deposit and dissemination of scientific research documents, whether they are published or not. The documents may come from teaching and research institutions in France or abroad, or from public or private research centers.

L'archive ouverte pluridisciplinaire **HAL**, est destinée au dépôt et à la diffusion de documents scientifiques de niveau recherche, publiés ou non, émanant des établissements d'enseignement et de recherche français ou étrangers, des laboratoires publics ou privés.

Proceedings of the XVII ECSMGE-2019
Geotechnical Engineering foundation of the future
ISBN 978-9935-9436-1-3
© The authors and IGS: All rights reserved, 2019
doi: 10.32075/17ECSMGE-2019-0263

XVII European Conference
ECSMGE 2019
Reykjavik
on Soil Mechanics
and Geotechnical Engineering

Centrifuge test on instrumented FBGs monopile foundation in sand

Essai en centrifugeuse d'une fondation monopieu instrumentée par fibre optique dans du sable

M. BLANC
IFSTTAR, Gers Dept., GMG Lab., Nantes, France

Z.S. Li, L. Thorel
IFSTTAR, Gers Dept., GMG Lab., Nantes, France

ABSTRACT: Monopile foundation is a typical foundation for offshore wind farms. An important issue related to the stability of monopiles is the lateral service loads resulted mainly from winds and currant. In this study, the centrifuge test was conducted at 100×g to study the response of this monopile under lateral loading. An aluminium tube with diameter D = 50 mm was instrumented with diametrically-opposed and symmetrically-distributed Fibre Bragg Grating sensors (FBGs), allowing to measure the moment profile of the pile below the ground level. Four LASER displacement sensors were used to detect the displacement of the pile above the ground. The model pile was jacked 5D into the saturated sand at 1×g. The lateral loading was applied at 5D above the ground level. The general and local behaviour is determined from the different experimental measurements.

RÉSUMÉ: Le monopieu est un type de fondations largement utilisé pour supporter les éoliennes en mer. Un point important concerne la stabilité latérale du monopieu sous sa charge de service qui est principalement due aux effets combinés de la houle et du vent. Dans cette étude, un essai en centrifugeuse est réalisé à 100×g pour étudier la réponse du monopieu sous chargement horizontal. Un tube d'aluminium de diamètre D = 50 mm a été instrumenté à l'aide de deux fibres optiques à réseaux de Bragg installées dans deux rainures diamétralement opposées. Ces fibres optiques permettent de mesurer le moment fléchissant dans le pieu à l'intérieur du sol. De plus, 4 capteurs de déplacement LASER permettent de connaitre le déplacement horizontal du pieu hors du sol. Le monopieu a été foncé à 1×g dans le massif de sable saturé sur une profondeur de 5D. Le chargement horizontal a été appliqué à une hauteur de 5D au-dessus du sol. Le comportement général ainsi que local ont pu être déterminés à l'aide des différentes mesures expérimentales.

Keywords: centrifuge; monopile; lateral loading; FBGs; sand

1 INTRODUCTION

The monopile is preferably used to support the wind turbine and blades for offshore wind farms. Its lifecycle is significantly influenced by the lateral service loads (e.g. currents, waves and wind) as the generation of lateral deflection may degrade the soil and trigger the instability problems.

In the literature, three methods exist to characterize the response of the monopile under lateral loading. There are : i) the full-scale field tests (e.g. Byrne et al., 2017) but with complex soil

conditions with stiffer layers, ii) model-scale laboratory (e.g. Abadie, and Byrne, 2014) but without good stress gradient in the model soil and iii) model-scale centrifuge tests (e.g. Klinkvort et al., 2013, Choo and Kim, 2015). Due to the high testing cost and potential problem in scaling, the first two methods are generally less used and the centrifuge test becomes a replacing choice.

Through centrifuge tests at different g levels, researchers are able to reproduce the field stress condition for monopiles as large as 5 m in diameter (e.g. Li et al, 2010). The soil reaction – pile displacement curves are determined. These results, together with the full-scale field, are of particular value for the design of next generation large diameter monopiles in Europe.

In this study, the centrifuge test was conducted to model the large diameter monopile under lateral loadings. Fibre Bragg Grating sensors were used to measure the strains and then to determine the moment profile of the pile. Experimental results are presented through the local pile analysis (Garnier, 2013). The lateral displacement and the pile behaviour at the ground level are analysed.

2 METHODOLOGY

2.1 Centrifuge modelling

The centrifuge modelling consists of the use of small scale model installed in a high field of gravity to permit the replication of the stress state that exists in the prototype. The use of the 5.5 m diameter beam centrifuge in the study of deep foundations is important in order to have a negligible gradient of g between the top and the bottom of the model pile (Garnier, 2001).

Tests presented in this study have been performed at acceleration level of 100 times the earth gravity (100×g) on piles scaled by 1:100.

2.2 Model soil

The model soil consists of Fontainebleau NE34 poorly graded sand (Table 1) with a relative density of 81 % obtained by air pluviation into a rectangular strongbox (1200 mm long, 800 mm large and 720 mm high). The final height of the sand mattress is 560 mm which represents 56 m in prototype dimension.

The strongbox is connected to a water tank by four draining channels at the bottom. The sand mattress is fully saturated and the effective unit weight of 1.05 g/cm^3. The water table is located 30 mm above the ground surface (i.e. 3 m in prototype).

Table 1. Characteristics of the Fontainebleau NE34 sand

Sand	U_C (=d_{60}/d_{10})	d_{50} (µm)	$\rho_{d\,min}$ (g/cm3)	$\rho_{d\,min}$ (g/cm3)
NE34	1.53	210	1.434	1.746

2.3 Model instrumented monopile

In previous centrifuge tests, piles were instrumented with strain gages glued on the external pile shaft (Roesquoët et al., 2007) or even inside the tube (El Haffar et al., 2018), with the connection wires embedded inside the tube. These methods, however, alter the pile dimension and surface roughness and as a result may lead to erroneous measurements. To accurately model the monopile behaviour, the pile must be open-ended with sand inside the pile (i.e. in-situ situation). For this purpose, the model monopile in this study has been instrumented with Fiber Bragg Grating sensors (FBGs).

The model monopile is an aluminium 2017A tube with a Young modulus E = 72.5 MPa and a plasticity limit σ^p = 280 MPa. The tube geometrical characteristics are presented in Table 2 with D the external diameter, L the embedded length, l_e the load eccentricity, t the wall thickness and I the area moment of inertia. The internal diameter of the pile is 45 mm which corresponds at more than 200 times the medium sand grand diameter d_{50}. In this case, the scale effect on grain size should be negligible (Klinkvort et al., 2013)

Table 2. Geometrical pile characteristics

dim.	D	L/D	l_e/D	t	I
model	50 mm	5	5	2.5 mm	10.5 cm^4
proto-type	5 m	5	5	0.25 m	10.5 m^4

Two semi-cylindrical grooves, diametrically opposed and with diameter of 1 mm, have been machined along the pile shaft in its embedded part (Figure 1). In this way, the depth of the grooves is 0.5 mm, i.e. 1/5 of the wall thickness.

Two identical optical fibers with a diameter of 180 µm are glued in the two grooves. On each fiber, 10 Fiber Bragg Grating sensors (FBGs) have been manufactured every D/2 (i.e. 25 mm) from the ground level to the pile base. These FBGs are protected by a Teflon tube of 200 µm in diameter. These FBGs measure the external deformations at 10 different cross sections of the pile and then, after calibration, give the bending moments of the pile at these levels.

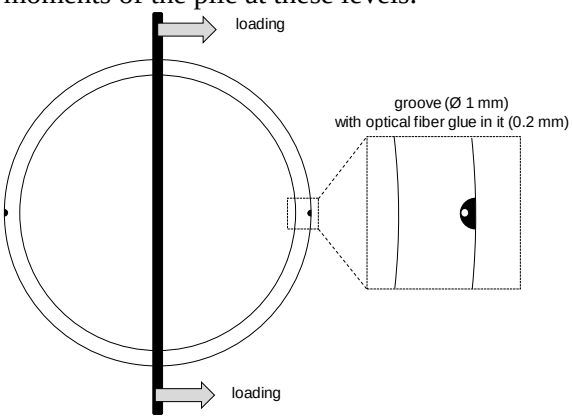

Figure 1. Schematic view of the pile cross section

These optical fibers are connected to a *FS22* Optical interrogator from *HBM FiberSensing* located near the axis of the centrifuge. In this way, the interrogator is subjected to a macro-gravity field 20 times lower than the one of the soil model to insure its good working order.

To horizontally load the monopile at different eccentricity, steel rod cylinders of 5 mm diameter are inserted in the wished cross sections. These rods go through the centre of the cross sections and are perpendicular to the grooves (Figure 1).

2.4 Experimental set-up

Using a hydraulic jack, the monopile is installed at 1×g at a constant speed 1 mm/s. At the end of the installation, the sand level inside the pile is checked and there is no plug generated. In

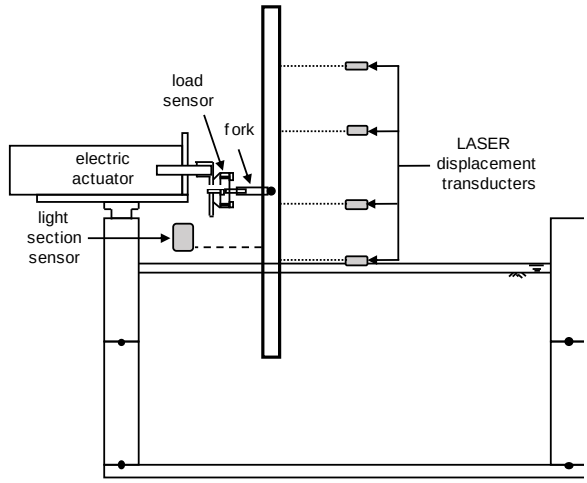

Figure 2. Schematic view of the set-up

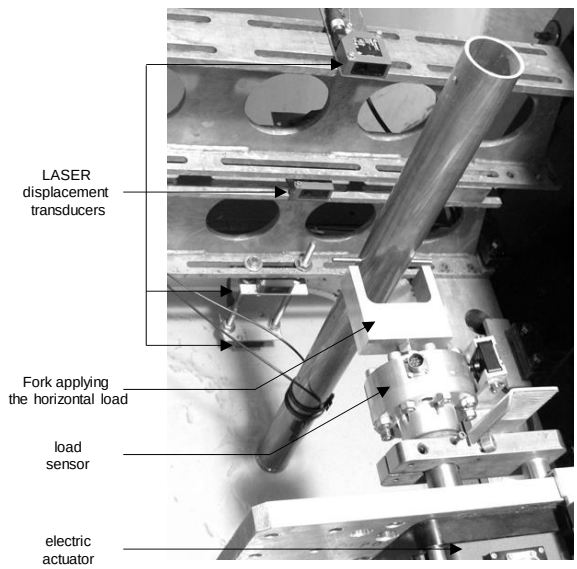

Figure 3. Picture of set-up inside the swinging basket of the centrifuge

this way, this installation method models a wished-in-place pile.

An electric actuator with 150 mm stroke is placed on the edge of the strongbox (Figure 2). At the actuator termination, a fork is screwed in the load sensor. This fork pushes the rod that crosses the monopile and apply the lateral load in the middle of the cross section. The actuator is displacement controlled at 0.1 mm/s in model scale.

To measure the horizontal displacement of the monopile above the ground surface, 4 LASER displacement transducers are fixed in front of the monopile at 40 mm, 210 mm, 410 mm and 610 mm above the ground surface (Figure 3). These non-contact transducers measure the horizontal displacement of the front edge of the monopile at a constant elevation. A fifth transducer (hidden in Figure 3, located under the actuator) measures the horizontal displacement of the cross section of monopile 80 mm above the ground surface. This transducer is a light section sensor which measures the center position of a round object.

3 TEST RESULTS

3.1 General behaviour

The monopile is horizontally loaded at the height l_e = 5D above the ground level. The horizontal load H induces a horizontal displacement h at this point. As the embedded length is 5D, the pile cannot be considered as fixed at its base. The pile rotates around a peculiar point. Above, the soil reaction is positive whereas it is negative under this point (Figure 4).

The pile head behaviour is presented on Figure 5. Even after large head displacement of 0.5D, the load continues to increase. This behaviour is typical of monopile horizontally loaded. Then the limit (or failure) load H_{lim} (Puech and Garnier, 2017) is difficult to determined.

To compare different load H and eccentricity l_e, horizontal pile displacement y_G and pile rotation θ_G are compared at the ground level. Unfortunately, these data cannot be directly measured in centrifuge. But it is possible to calculate them. The procedure is explained here after.

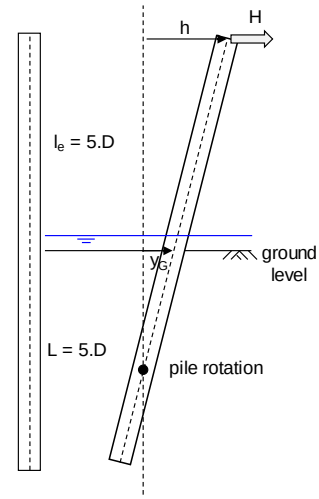

Figure 4. General pile behaviour

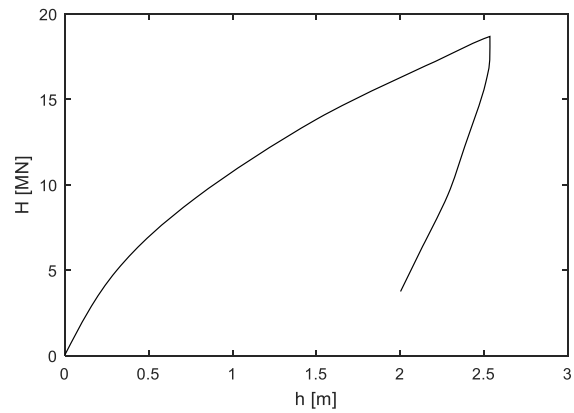

Figure 5. Pile head horizontal load H - displacement h curve.

3.2 Bending moment profile

For the FGBs measurements, the monopile bending moments are calculated inside the soil every D/2. In Figure 6 (right) is presented this bending moment profile for H = 16 MN or for a moment at the ground level M_g = 400 MN.m. First, the load H measured by the actuator load sensor and the bending moment provided by the

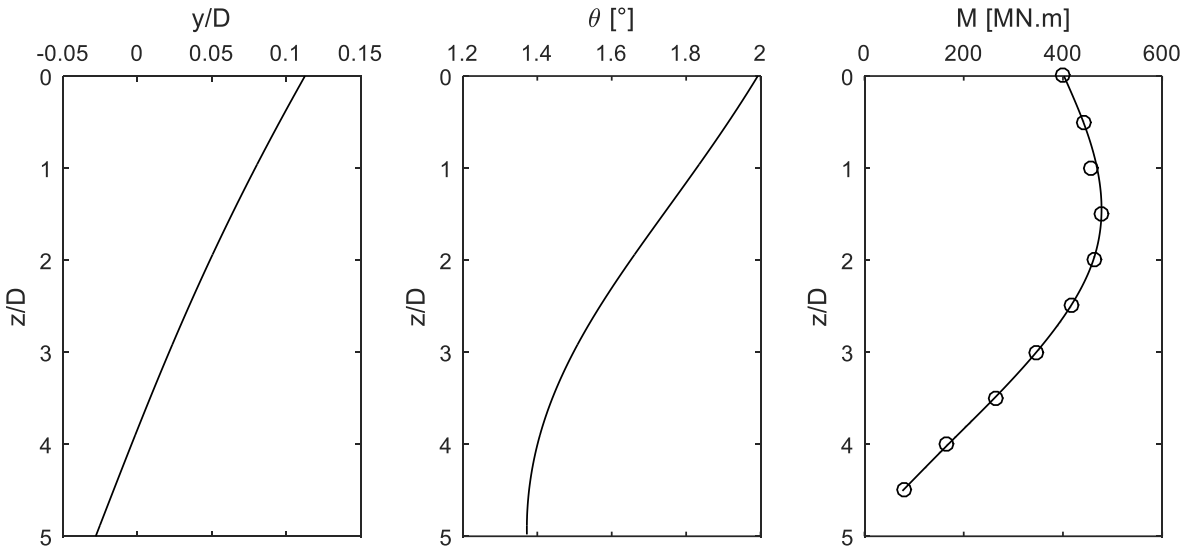

Figure 6. Normalized lateral pile displacement y/D (left) - pile rotation θ (centre) - Bending moment (right) along the embedded length for H = 16 MN.m

FBGs at the ground level give similar results. It validates the use and the accuracy of FGBs.

For this monopile and this loading case, the maximum bending moment is at 1.5*D* inside the soil. Its second derivation seems to be null around 4*D*. It means there is no soil reaction. This partucilar point corresponds to the rotation point of the pile. This partucilar point is very important to find the pile rotation and lateral displacement. The method to get them is described in the next paragraph.

3.3 Lateral pile displacement

Above the ground level, the pile lateral displacement is measured in 5 points by 4 LASER displacement transducers at 0.8*D*, 4.2*D*, 8.2*D* and 12.2*D* and one by a light section sensor at 1.6*D*. These measurements are represented in Figure 7 for *H* = 16 MN.m by empty circular markers. On this figure, is also plotted the displacement recorded by the actuator at 5*D* (solid circular marker). Due to some play in the loading set-up, the actuator overestimates the pile displacement and cannot be use in the analysis.

The pile rotation and lateral displacement profiles can be obtained by integrating one and two times the bending moment along the embedded

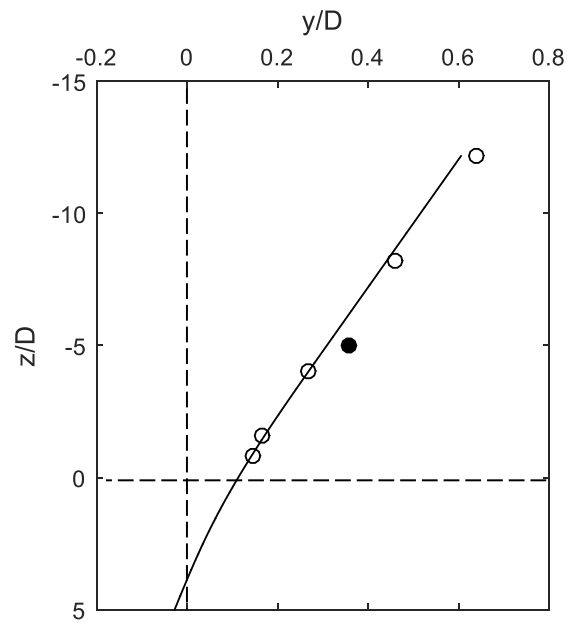

Figure 7. Normalized lateral pile displacement vs. measurements for H = 16 MN.m

length. These integrals need two constants of integration: generally the rotation and the displacement at ground level. However, pile head rotation cannot be used here for the second constant because of the accuracy of different horizontal displacement measurements (Figure 7). The slightest uncertainty generates an important divergence as regards the double integration procedure. A better option consists in taking two displacements for integration constants: one on the ground surface and one inside the soil as close as possible of the pile tip. This second constant is determined by finding the pile rotation centre. This partucilar point is located at the depth where there is no soil reaction. If there is no reaction of the soil, there is no lateral displacement of the pile. This method is only acceptable for monotonic loading. For cyclic loading or when plastic deformation appears around the rotation centre, an extension of this framework developed by El Haffar et al. (2019) must be used.

Pile rotation and lateral displacement profiles are presented in Figure 6. Pile rotation varies from 2° at ground level until 1.4° at pile base. This monopile is really flexible. The pile lateral displacement varies from 0.11D at ground level to -0.03D at pile base. From these results, the reactions of the moment and the shear at pile base cannot be ignored.

3.4 Behaviour at ground level

Once the different profiles are obtained, it is possible to plot the bending moment M_g, the horizontal load H_g and the pile rotation θ_g versus the normalised pile horizontal displacement y_g/D at ground level (Figure 8).

First, even after horizontal displacement higher than 0.1D, the bending moment and the horizontal load continue to increase. For 0.1D, θ_g = 1.8° which is largely above the standard recommendation (<1°). So the monopile is far away from its physical failure but its rotation is already over the design recommendation

A second noticeable result is the relationship between the displacement and the rotation which is quasi-linear. This peculiar behaviour is characteristic of the stiffness ratio between the pile itself and the soil. For a stiffer pile, a higher slope would have been obtained.

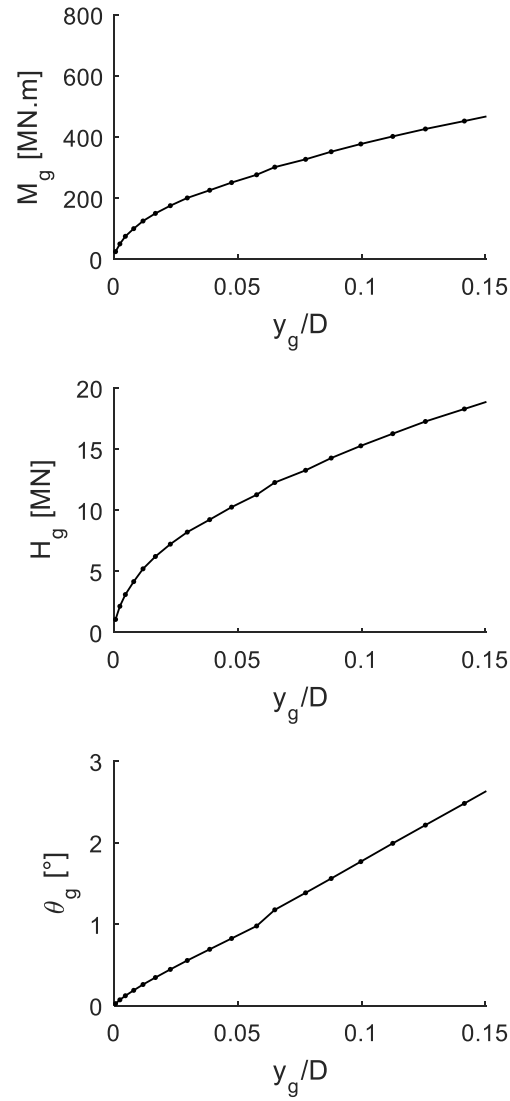

Figure 8. At ground level, bending moment M_g (up), horizontal load H_g (centre) and pile rotation θ_g (down) versus the normalised pile horizontal displacement.

4 CONCLUSIONS

A new set-up has been developped to test monopile foundation in centrifuge at 100×g. The model monopile (D = 5 m, L/D = 5 and l_e/D =5) is instrumented to measure the bending moment profile by two optical fibers with 10 Fiber Bragg Grating sensors (FBGs) on each side. These optical fibers are glued inside cylindrical grooves diametrically opposed along the pile shaft in its embedded part. In this way, the instrumented monopile can be open-ended with sand inside it.

From the measurement of the bending moment profile, the pile rotation and lateral displacement profiles can be obtained by a double integration with two integration constants. One is given by the displacement above the ground level. The second consists in finding the pile rotation centre inside the soil. The higher the distance between these points is, the more accurate will be the method.

Characteristic behaviours of monopile foundation have been observed with high rotation 1.4° and high lateral displacement -0.03D at pile base for a displacement of 0.11D at ground level.

With this new model monopile with FBGs, it would be interesting to deeply investigate the monopile behaviour in centrifuge with, for instance, the impact of the installation method and/or the effect of cyclic loading.

5 ACKNOWLEDGEMENTS

This work benefited from France Energies Marines and State financing managed by the National Research Agency under the Investments for the Future program bearing the reference SOLCYP+ ANR-10-IEED-0006-18.

6 REFERENCES

Abadie, C. N., & Byrne, B. W. 2014. Cyclic loading response of monopile foundations in cohesionless soils. *8th International Conference on Physical Modelling in Geotechnics*. 779-784.

Byrne, B. W., McAdam, R. A., Burd, H. J., Houlsby, G. T., Martin, C. M., Beuckelaers, W. J. A. P., ... & Ushev, E. 2017. PISA: New Design Methods for Offshore Wind Turbine Monopiles. *Offshore Site Investigation Geotechnics. Society for Underwater Technology*. 142-161.

Choo, Y. W., and Kim, D. 2015. Experimental Development of the p-y Relationship for Large-Diameter Offshore Monopiles in Sands: Centrifuge Tests. *Journal of Geotechnical and Geoenvironmental Engineering*, **142**(1), 04015058.

El Haffar, I., Blanc, M., & Thorel, L. 2018. Effect of the installation methods of piles in cohesionless soil on their axial capacity. *9th International Conference of Physical Modelling in Geotechnics*, 1341-1346.

El Haffar, I., Blanc, M., & Thorel, L. 2019. Monotonic lateral loading on single piles in sand: parametric centrifuge modelling in eccentricity, saturation and installation mode. *submitted to Géotechnique*.

Garnier, J. (2001). Modèles physiques en géotechnique-I–Évolution des techniques expérimentales et des domaines d'application. *Revue Française de géotechnique*, **97**, 3-29.

Garnier, J. 2013. Advances in lateral cyclic pile design: contribution of the SOLCYP project. *Proceedings of the TC 209 Work-shop: 18th ICSMGE–Design for Cyclic Loading: Piles and Other Foundations*. 59-68.

Klinkvort, R. T., Hededal, O., & Springman, S. M. 2013. Scaling issues in centrifuge modelling of monopiles. *International Journal of Physical Modelling in Geotechnics*, **13**(2), 38-49.

Klinkvort, R. T., Black, J., Bayton, S., Haigh, S., Madabhushi, G., Blanc, M., … & Gaudin, C. 2018. A review of modelling effects in centrifuge monopile testing in sand. *9th International Conference on Physical Modelling in Geotechnics*. 719-724.

Li, Z., Haigh, S. K., & Bolton, M. D. 2010. Centrifuge modelling of mono-pile under cyclic

lateral loads. *7th International Conference of Physical Modelling in Geotechnics*, 965-970.

Puech, A., & Garnier, J. 2017. Design of Piles Under Cyclic Loading: SOLCYP Recommendations. John Wiley & Sons.

Rosquoet, F., Thorel, L., Garnier, J. & Canepa, Y. 2007. Lateral cyclic loading of sand-installed piles. *Soils and Foundations*. **47**(5), 821-832.