HAL
open science

Topology of the Stokes phenomenon

P P Boalch

To cite this version:

P P Boalch. Topology of the Stokes phenomenon. Sergey Novikov; Igor Krichever; Oleg Ogievetsky; Senya Shlosman. Integrability, Quantization, and Geometry: I. Integrable Systems, 103 (1), ACM, pp.55-100, 2021, Proceedings of the Symposia in Pure Mathematics, 978-1-4704-5591-0. 10.48550/arXiv.1903.12612 . hal-02377174v2

HAL Id: hal-02377174

https://hal.science/hal-02377174v2

Submitted on 1 Oct 2021

HAL is a multi-disciplinary open access archive for the deposit and dissemination of scientific research documents, whether they are published or not. The documents may come from teaching and research institutions in France or abroad, or from public or private research centers.

L'archive ouverte pluridisciplinaire **HAL**, est destinée au dépôt et à la diffusion de documents scientifiques de niveau recherche, publiés ou non, émanant des établissements d'enseignement et de recherche français ou étrangers, des laboratoires publics ou privés.

Proceedings of Symposia in Pure Mathematics
Volume **103.1**, 2021
https://doi.org/10.1090/pspum/103.1/01832

Topology of the Stokes phenomenon

P. P. Boalch

Abstract. Several intrinsic topological ways to encode connections on vector bundles on smooth complex algebraic curves will be described. In particular the notion of *Stokes decompositions* will be formalised, as a convenient intermediate category between the Stokes filtrations and the Stokes local systems/wild monodromy representations. The main result establishes a new simple characterisation of the Stokes decompositions.

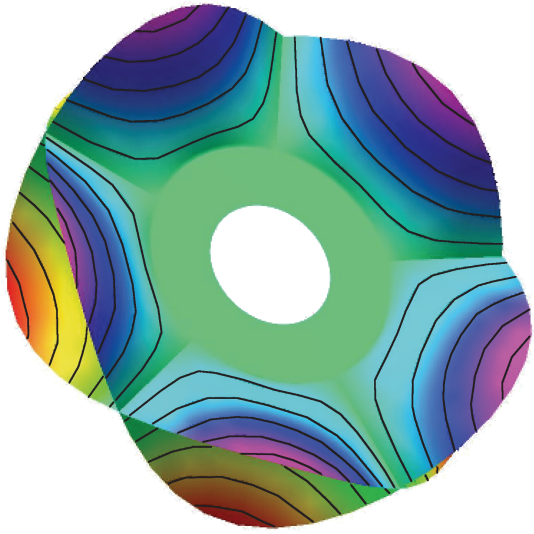

2020 *Mathematics Subject Classification.* Primary: 34M40, 32G34; Secondary: 14D20, 14D23, 14H30, 14H60, 32J25, 32S40, 33C10, 34E05, 34M30, 34M35, 40G10, 81T40.

©2021 P.P. Boalch

"The subject ought to be one of pure mathematics, for it is in honour of ABEL, and most of my work refers to applications of mathematics. There is one thing I thought might perhaps do.... The subject is the discontinuity of arbitrary constants that appear as multipliers of semi-convergent series..."

G.G. Stokes, Cambridge, 23/4/1902

Contents

1. Introduction
2. Summary of some data canonically determined by a connection
3. Linear algebra
4. Topological basics
5. Irregular classes and associated topological data
6. Stokes filtered local systems
7. Stokes graded local systems
8. Stokes local systems
9. Stokes local systems and Stokes graded local systems
10. Operations on Stokes filtered local systems
11. Stokes filtrations from Stokes gradings
12. Canonical splittings
13. Wild character varieties and moduli problems
Appendix A. Analytic black boxes
Acknowledgments
References

1. Introduction

1.1. Systems of meromorphic linear differential equations on the complex plane have been studied for centuries, and, more generally, algebraic connections on vector bundles on smooth complex algebraic curves are extremely basic objects.

The *Riemann–Hilbert correspondence* [**28**, **41**] says that the special class of connections with regular singularities (moderate growth/Fuchsian type) are classified by their local system of solutions, i.e. by their monodromy representations (upon choosing a basepoint). If one sets this up carefully (as in [**28**]) it is an equivalence of categories—this might sound exotic but it really is just a very convenient way to express precisely the fact that the topological data (the local system/fundamental group representation) encodes the algebraic differential equations. In particular it implies the more familiar fact that two connections are isomorphic if and only if their monodromy representations are conjugate.

For more general connections, those with *irregular singularities*, the situation is unfortunately much less widely understood in the mathematics community. The basic question is to describe the data that one needs to add to the local system to encode such connections. The fact of the matter is that this can indeed be done, and there are several different approaches, all of which are equivalent, but not in a trivial way. A basic difficulty is to recognise the intrinsic geometric structures that appear—one needs to be able to see through the explicit coordinate dependent computations prevalent (and essential) in the development of the subject. In the regular singular case this was done a long time ago and underlies the definition of the fundamental group and the notion of local system (locally constant sheaf of complex vector spaces).

The aim of this article is to describe intrinsically, as simply as possible, three different approaches to the extra "topology at infinity" that arises in the case of irregular connections: 1) *Stokes filtrations*, 2) *Stokes decompositions/gradings*, and 3) *Stokes local systems*, or *wild monodromy representations*. We will then give a new direct proof (building on an idea of Malgrange) that they are equivalent. The reader will see that the situation is somewhat analogous to Hodge structures, which may be described equivalently in terms of the Hodge filtration or the Hodge decomposition.

The impetus came from studying a simple class of examples (in [**23**]) and then trying understand directly the equivalence of 1) and 3) in general: it turns out that this becomes much simpler if one first formalises the category 2) of Stokes graded local systems, and then establishes two equivalences 1) $\xleftarrow{\sim}$ 2) $\xrightarrow{\sim}$ 3), as will be done here.

The rest of this introduction will give a sketch, deferring full definitions to later sections. Some of the recent motivating questions (construction of wild character varieties, the nonlinear local systems that they form, the relative Riemann–Hilbert–Birkhoff maps, the link to Drinfeld–Jimbo quantum groups, and the TQFT approach to meromorphic connections) are reviewed in [**11**, **16**, **22**, **24**]. In particular the wild character varieties (moduli spaces of Stokes local systems) give the simplest description of the differentiable manifolds underlying a somewhat vast collection of complete hyperkähler manifolds, the nonabelian Hodge spaces (see [**22**] Defn. 7). In a different complex structure they are algebraically completely integrable Hamiltonian systems, some key examples of which arise as finite gap solutions of integrable hierarchies, such as KdV [**34**]. On the other hand, as noted in [**11**], an initial impetus for these questions came from Dubrovin's classification of semisimple Frobenius manifolds in terms of Stokes data.

1.2. One completely general approach involves adding filtrations (flags indexed by certain ordered sets) on sectors at each pole, the *Stokes filtrations*. The exact types of filtrations that occur, and how they may jump, can be axiomatised yielding an equivalence of categories [**29**, **44**], generalising the Riemann–Hilbert correspondence. The filtrations encode the exponential growth rates of solutions as one goes towards a pole. (The approach in §6 below is very close to op. cit., but slightly simpler since we index the filtrations by finite totally ordered sets.) A consequence of this is that there is a canonically defined (continuous) *graded local system* on a small punctured disk around each pole: the associated graded of the Stokes filtrations.

This is an intrinsic way to describe the formal classification (of Fabry–Hukuhara–Turrittin–Levelt): for example two connections germs are formally isomorphic (over $\mathbb{C}((z))$) if and only if their graded local systems are isomorphic.

The revolutionary idea of Stokes [**57**] was that it is sometimes better to start at infinity, at the pole, and work from there towards the interior of the curve. He used this idea to give a spectacular computation of the position of the fringes of rainbows (the zeros of the Airy function) far more efficiently than summing the Taylor series at zero. Mathematically a key idea appearing here is that:

a) the connection canonically determines a finite number of "singular directions" at each pole, and

b) the choice of any formal solution of the connection at a pole uniquely determines a preferred actual solution, on any sector at the pole not containing a singular direction.

Stokes only worked this out in a few examples (related to the Airy and Bessel equations), but the idea is correct and is now a general theorem (multisummation of formal solutions of linear differential equations [**4**]). It also holds more generally in many non-linear situations when one does a formal simplification [**35**, **47**].

The import of this to the problem of describing the category of connections topologically, is the following:

(1.1) *Away from the singular directions there is a preferred/canonical way to glue the graded local system to the local system of solutions of the connection.*

In particular in these sectors there is a preferred grading, the *Stokes grading* or *Stokes decomposition* (not just a filtration) of the local system of solutions. One can axiomatise the gradings that occur and their possible discontinuities across the singular directions, and again prove an equivalence, between connections and Stokes graded local systems.

The Stokes gradings split the Stokes filtrations wherever they are both defined, and this actually characterises them:

THEOREM 1.1 (Splitting). *For any Stokes filtered local system there is a unique Stokes graded local system (with the same underlying local system) such that the gradings split the filtrations wherever both are defined.*

This statement looks to be new. See §1.3 and Thm. 11.3 for more details, and Prop. 12.2 for the simplest case, with just one level. Note that usually one gets preferred gradings by having fixed asymptotics (i.e. splitting the Stokes filtrations) on a large enough sector (or a nested sequence of such sectors), whereas the characterisation here is different.

On the other hand one can axiomatise the local systems that occur when the graded local system is actually glued to the local system of solutions. One way to formalise this is to boldly puncture the underlying curve Σ° near each singular direction at each singular point, to yield a new curve $\widetilde{\Sigma} \subset \Sigma^\circ$. The idea underlying these *tangential punctures* is already in Stokes' paper—see §A.4 for more on this. The Stokes gluing (1.1) then yields a local system on $\widetilde{\Sigma}$, the *Stokes local system* [**18**, **25**], equal to the graded local system on a halo (small punctured disk) near each pole, and to the local system of solutions away from the halos. The Stokes local systems can be axiomatised and again one gets an equivalence of categories (it is very close to the category of Stokes graded local systems).

The resulting equivalence between Stokes filtrations and Stokes local systems could be viewed as an intrinsic global version of the main theorem of Loday-Richaud [**42**] (no longer needing the choice of a marking/formal normal form, or any discussion of nonabelian cocycles) which in turn refines the main result (Thm. 3.4.1) of Babbitt–Varadarajan [**3**] and is essentially equivalent to results of Jurkat in [**6**, **40**].

Thus in summary this gives three topological descriptions of the category of connections: as Stokes filtered local systems, Stokes graded local systems or as Stokes local systems. Combined, they give a multi-faceted answer to the question "What is a Stokes structure?", much as a Hodge structure has two different descriptions.

Whereas the Deligne–Malgrange approach to Stokes filtrations is easily seen to be intrinsic (once one realises the exponential local system has an intrinsic definition, as in [**25**] Rmk 3), the other approaches are less well developed, so we are taking the opportunity here to describe them intrinsically, thus giving a topological approach to the version of the Stokes phenomenon actually discovered by Stokes (hence the title of this article).

In turn these three approaches give three different approaches to the wild character varieties: just as moduli spaces of local systems form an interesting class of varieties (the character varieties), moduli spaces of Stokes local systems form the wild character varieties. Due to the three descriptions, each wild character variety solves three different moduli problems: it is also a moduli space of Stokes filtered local systems, and a moduli space of Stokes graded local systems (cf. e.g. the examples in [**23**, **53**]).

This is very useful in practice since the description in terms of Stokes local systems yields an explicit presentation of the wild character variety as a quotient

$$\mathrm{Hom}_{\mathbb{S}}(\Pi, G)/\mathbf{H}, \qquad \Pi = \Pi_1(\widetilde{\Sigma}, \beta) \tag{1.2}$$

of an affine variety $\mathrm{Hom}_{\mathbb{S}}(\Pi, G)$ (the space of Stokes representations, or wild monodromy representations), by a reductive group $\mathbf{H}$. This enables the use of standard geometric invariant theory to construct the wild character variety algebraically [**13**, **18**, **25**]. The possibility of such a presentation is not evident if one starts from the Stokes filtration viewpoint. Further, earlier approaches use a different type of framing called a "marking", and in general this does not lead to reductive groups—see [**3**] Theorem 2.3.1, or [**2**] p.98. (So in essence we have rejigged things in order to be able to carry out this construction.) This is a direct generalisation of the standard presentation of the (tame) character variety in the form

$$\mathrm{Hom}(\pi_1(\Sigma^\circ, b), G)/G. \tag{1.3}$$

A major preoccupation has been to generalise geometric properties of the spaces (1.3) to the spaces (1.2), such as: 1) symplectic/Poisson structures [**10**, **11**, **13**, **18**, **25**, **36**, **58**] (the spaces (1.2) have algebraic Poisson structures with symplectic leaves given by fixing the isomorphism classes of the graded local systems at each pole), 2) hyperkähler metrics and special Lagrangian fibrations [**7**, **52**] (sufficiently generic symplectic leaves are complete hyperkähler manifolds, becoming meromorphic Hitchin systems in special complex structures), and 3) wild mapping class group actions [**12**, **18**, **45**] (upon deforming the underlying wild Riemann surface the spaces (1.2) form a local system of Poisson varieties, and the monodromy of this is the wild mapping class group action on (1.2)).

1.3. Summary of main result. In brief the logic of Thm. 1.1 is as follows.

1) The Stokes graded local systems involve adding gradings to a local system on sectors at each puncture. This involves data $n, I, \Theta, \mathbb{A}, \prec_d$ where:
• n is the rank of the local systems,
• I is a finite covering of the circle of directions at each pole (used to index the gradings),
• Θ an integer for each component of I (the dimensions of the graded pieces),
• $\mathbb{A}$ is a finite set of directions at each puncture, where the gradings may jump,
• $\prec_d$ (the Stokes arrows) is a partial order of I_d for each $d \in \mathbb{A}$ that will be used to control the possible relative positions of the gradings across each direction in $\mathbb{A}$.

2) Similarly the Stokes filtered local systems involve adding filtrations on sectors at each puncture. This involves data $n, I, \Theta, \mathbb{S}, <_d$ where n, I, Θ are as above and:
• $\mathbb{S}$ is a finite set of directions at each puncture, where the filtrations may jump,
• $<_d$ (the exponential dominance orderings) is a total order of I_d for each direction $d \notin \mathbb{S}$ (continuous provided d does not cross $\mathbb{S}$). They will be used to index the filtrations and to control the possible relative positions of the filtrations across each direction in $\mathbb{S}$.

3) The notion of irregular class will be recalled in §5. The key point is that it canonically determines both types of data: $(n, I, \Theta, \mathbb{A}, \prec_d)$ and $(n, I, \Theta, \mathbb{S}, <_d)$. (Also any algebraic connection on the curve canonically determines an irregular class at each puncture.) Thus one can consider Stokes graded local systems and Stokes filtered local systems with the given irregular class. The main result then says that for each Stokes filtered local system of type $(n, I, \Theta, \mathbb{S}, <_d)$, there is a *unique* Stokes grading of type $(n, I, \Theta, \mathbb{A}, \prec_d)$ (on the same underlying local system) that splits the Stokes filtration wherever both are defined.

This result is simple in the rank two cases studied classically (second order equations): the Stokes filtrations are then given by a line (the subdominant solutions) in a rank two local system, and across $\mathbb{S}$ such lines are transverse and make up the Stokes grading. See [**23**] for a recent exposition—as shown there even in such examples the resulting different descriptions of the wild character variety are interesting, for example relating the Euler continuant polynomials to the multiratio of tuples of points on the Riemann sphere. The simplest of the examples in [**23**] will be used as a running example to illustrate some of the basic constructions, although it doesn't exhibit the complexity of the general set-up.

1.4. Further background/other approaches. The history is long and complicated and would require a book to put it all in its proper context. Note that most authors work entirely in one point of view. Nonetheless here is a brief attempt to better document the various discoveries leading to the wonderful fact that the category of connections on smooth curves has a precise topological description (or more precisely, several). Cf. also [**32, 51, 59**] and references therein.

1) Similar presentations to (1.2) were first found by Birkhoff [**8, 9**] for generic connections of any rank. This work really started the subject of constructing invariants of irregular connections. It was extended from the generic case to the general case in [**6, 40**], using the 1976 version of [**55**]. Their approach also involves preferred bases on sectors. It is similar but not quite the same as the Stokes approach used here. An intrinsic form of their results will be discussed in a sequel to the present paper. Whereas Stokes filtrations arise as one goes *towards* a pole, and

Stokes gradings arise if one starts *at* a pole, Birkhoff analysed what happens when one goes *around* a pole.

2) The Malgrange–Sibuya cohomological approach [**43**, **54**] (cf. [**3**, **42**, **55**]) looks to have been the first general classification of germs of marked connections, and so it traditionally acts as a hub to pass between different viewpoints (or as solid ground on which to establish other viewpoints).

The term *Stokes structure* first appeared in [**54**]. As emphasised above, the message of [**29**, **44**] is that it is sometimes better to think in terms of filtrations (early examples of which are the subdominant solutions in [**53**]), and the message of [**57**] (and [**8**, **42**, **47**]) is that it is sometimes better to think in terms of gradings, or wild monodromy.

3) The Stokes approach goes back to Stokes' paper [**57**]. Its extension to generic connections of arbitrary rank is essentially the story explained in [**5**] (this is similar to [**8**, **9**], but solved the *Birkhoff wall-crossing problem*, of central importance in isomonodromy). It appears in many works on isomonodromy and the Painlevé equations such as [**11**, **37**, **39**]. The general case appears (in slightly different forms) in Martinet–Ramis [**47**] and Loday-Richaud [**42**] (and the links to work of Ecalle and others on multisummation are explained there—pioneering work of E.Borel, Watson and Dingle underlies this approach). These provided much inspiration and the main result above (Thm. 1.1) resulted from trying to understand intrinsically the main theorem of [**42**] (describing the Malgrange–Sibuya non-abelian cohomology space in terms of Stokes groups).

1.5. Generalisations. Some extensions to be discussed in detail elsewhere are as follows.

1) In modern applications of these results, such as isomonodromy/wall-crossing or 2d gauge theory (wild non-abelian Hodge theory on curves), a slightly bigger category than the category of connections on curves is used, involving particular extensions across the punctures (and compatible parabolic structures/filtrations, cf. [**7**, **17**, **22**]). Topologically this involves upgrading each graded piece of the graded local system to be $\mathbb{R}$-filtered. This was understood in the tame case in [**56**] ($\mathbb{R}$-filtered local systems) and is not essentially different in the wild case ($\mathbb{R}$-filtered Stokes local systems), once one understands how to superpose the tame story on the wild story. The bijective Riemann–Hilbert–Birkhoff correspondence of [**11**] Cor. 4.9 is an example of this.

2) The work [**12**, **13**, **15**, **18**, **25**] involves the extension of Stokes data to the case of connections on principal G-bundles for other algebraic groups beyond $\mathrm{GL}_n(\mathbb{C})$, mainly from the viewpoint of Stokes local systems. It requires some familiarity with root systems/Lie theory. The original aim was to write the present article at that level of generality but the simple uniqueness statement of Thm. 1.1 did not seem to be known even for $\mathrm{GL}_n(\mathbb{C})$, so a separate (simpler) presentation of this case seemed justified.

3) Of course having a clear picture of how the linear case works, suggests how to phrase the *nonlinear* Stokes phenomenon (this is already remarked in [**47**]). More pointedly the version for general principal G-bundles suggests directly how the nonlinear case should work, since it amounts to replacing G by an automorphism group of a variety. One of the main points of [**25**] was to understand the definition of $\mathcal{I}$-graded G-local systems, as an action of a certain local system $\mathcal{T}$ of infinite dimensional tori (its fibres are isomorphic to the exponential torus of [**47**]).

Thus in the nonlinear case a Stokes graded local system will involve a nonlinear local system V with a preferred locally constant torus action in sectors at infinity. Generically one would expect this torus to have dense orbits, so the fibres of V on sectors will have dense tori in them. For the local systems formed by the wild character varieties (cf. [**11**, **18**]), one expects to be able to write down these tori explicitly, analogously to the well known explicit description of the (tame) nonlinear monodromy (this question was raised in [**48**]). In some examples such tori are evident by combining the complex WKB viewpoint [**60**] and the TQFT approach to meromorphic connections (initiated in [**11**, **13**] (beware section 6 of this is not in the 2002 arXiv version) and completed in [**15**, **18**, **25**]): Each generic Stokes graph ([**60**] p.271) corresponds to dividing the surface into pieces, and approximating the connection by the Airy equation in each piece. Translating to the TQFT approach, this amounts to fusing together several copies of the fission space $\mathcal{B}$ corresponding to the Airy equation. But the fission space of the Airy equation is just a copy of $\mathbb{C}^*$, and fusion means taking the product of such spaces, yielding a torus $(\mathbb{C}^*)^n$ (see the end of [**20**] for the pictures explaining this).

1.6. Layout of the article. To orient the reader, §2 gives a short (one page) summary of the data canonically attached to a connection that is going to be studied here. The subsequent sections then recall basic notions, related to linear algebra §3 (gradings, filtrations, splittings, relative position) and to local systems/covers §4. Next §5 recalls the notion of an irregular class (in the general linear case) and the resulting notion of irregular curve/wild Riemann surface (i.e. a curve with some marked points, each equipped with an irregular class). The core of the article consists of §§6,7,8 that define Stokes filtered local systems, Stokes graded local systems and Stokes local systems, respectively. Some basic properties are then established leading up to the proof of Thm. 1.1 in §12. Next §13 reviews the implications of this for the wild character varieties, and explains the resulting notion of wild nonabelian periods/wild Wilson loops. For completeness Apx. A summarises the analytic results (presented as black boxes) needed to attach such topological data to a connection. In the final section some of the basic ideas used by Stokes to get to this picture are sketched.

Note that the word "Stokes" will often be used to indicate possible discontinuity: whereas a graded local system is continuous, the graded pieces of a "Stokes graded local system" may have discontinuities at the singular directions, and similarly the filtered pieces of a "Stokes filtered local system" may have discontinuities

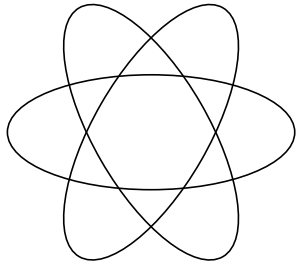

FIGURE 1. Example Stokes diagram, see §5.6.

at the oscillating directions. This is in the spirit of [**57**]. It is worth emphasising that there are thus *two* types of discontinuity that occur, in general in different directions. (On the other hand a Stokes local system has no discontinuities, although it lives on the surface obtained by removing the tangential punctures and is only graded in the halos.)

2. Summary of some data canonically determined by a connection

Let Σ be a smooth compact complex algebraic curve, $\mathbf{a} \subset \Sigma$ a finite subset, and $\Sigma^\circ = \Sigma \setminus \mathbf{a}$. Let $\pi : \widehat{\Sigma} \to \Sigma$ be the real oriented blow up of Σ at $\mathbf{a}$ and let $\partial = \pi^{-1}(\mathbf{a})$. Thus $\partial = \bigcup_{a \in \mathbf{a}} \partial_a$ is a collection of circles, and a point $d \in \partial_a$ is a real oriented direction in the tangent space $T_a\Sigma$ at $a \in \mathbf{a} \subset \Sigma$. There is a canonically defined covering space $\mathcal{I} \to \partial$, the *exponential local system* (see §5.1 below).

Suppose (E, ∇) is a connection on an algebraic vector bundle on Σ°. Then the following data are canonically defined:

1) The local system $V = \mathrm{Ker}(\nabla^{an})$ of analytic solutions. It is a locally constant sheaf of finite dimensional complex vector spaces on Σ°, and we extend it to $\widehat{\Sigma}$ in the obvious way.

2) An irregular class $\Theta : \mathcal{I} \to \mathbb{N}$. This will be recalled in detail below—in brief it amounts to choosing the exponential factors plus their multiplicities at each marked point. The exponential factors will be viewed as a finite covering space $I \to \partial$.

3) The singular directions $\mathbb{A} \subset \partial$ and the Stokes (oscillating) directions $\mathbb{S} \subset \partial$. They are both finite sets.

4) A total ordering of the finite set I_d (the fibre of $I \to \partial$ at d) for any non-oscillating direction $d \in \partial \setminus \mathbb{S}$. This is the natural dominance ordering of the exponential factors.

5) For any $d \in \partial \setminus \mathbb{S}$, a filtration of V_d by the finite set I_d, the *Stokes filtrations*.

6) For any $d \in \partial \setminus \mathbb{A}$, a grading of V_d by the finite set I_d, the *Stokes decompositions* or *Stokes gradings*.

7) An I-graded local system $V^0 \to \partial$ of the same rank as V, the *formal local system* (beware it is not a grading of V).

8) For any $d \in \partial \setminus \mathbb{A}$, a linear isomorphism $\Phi : V^0_d \to V_d$, the *gluing maps*.

9) For any $d \in \mathbb{A}$, two unipotent automorphisms: $g_d \in \mathrm{GL}(V_d)$, the wild monodromy automorphism, and $\mathbb{S}_d \in \mathrm{GL}(V^0_d)$ the Stokes automorphism.

10) A local system $\mathbb{V} \to \widetilde{\Sigma}$, the *Stokes local system*, where $\widetilde{\Sigma} \subset \widehat{\Sigma}$ is the auxiliary surface obtained by removing a tangential puncture $e(d) \in \Sigma^\circ$ near each $d \in \mathbb{A}$.

These data have lots of properties not mentioned here and are not independent (in particular the wild monodromy and the Stokes automorphism are essentially the same thing). Various subsets of these data can be (and have been) precisely axiomatised to encode the category of connections. Our basic aim is to describe this story and the relations between these data. Note this list is not comprehensive (although any other data will be a function of the data here)—the sequel will discuss the *Birkhoff gradings*.

3. Linear algebra

3.1. Gradings. Let V be a finite dimensional complex vector space and let I be a set. A *grading* Γ of V by I is the choice of a subspace $\Gamma_i = \Gamma(i) \subset V$ for each

$i \in I$ so that there is a direct sum decomposition

$$V = \bigoplus_{i \in I} \Gamma(i).$$

Some of the $\Gamma(i)$ are allowed to be the zero subspace, so I could be much bigger than the dimension of V. An *I-graded vector space* is a pair (V, Γ).

The multiplicity (or *dimension vector*) of a grading is the element $\Theta \in \mathbb{N}^I$ with components $\Theta(i) = \dim(\Gamma_i)$. In other words it is the map $\Theta : I \to \mathbb{N}; i \mapsto \dim(\Gamma_i)$. Given (V, Γ) an index $i \in I$ is *active* if Γ_i is nonzero, i.e. $\Theta(i) \neq 0$.

Let $\mathrm{Aut}(V, \Gamma) \subset \mathrm{Aut}(V) = \mathrm{GL}(V)$ denote the group of graded automorphisms, i.e. $g \in \mathrm{GL}(V)$ such that $g(\Gamma_i) = \Gamma_i$ for all $i \in I$.

A grading is *full* or *toral* if $\dim(\Gamma_i) \leq 1$ for all i, so that $\mathrm{Aut}(V, \Gamma)$ is a torus. A basis $\{e_i\}$ of V determines a full grading by taking Γ_i to be the line $\mathbb{C}e_i \subset V$. Conversely a full grading determines a basis up to the action of a torus (the choice of a basis of each one dimensional subspace Γ_i).

Sometimes (if V just has one grading) the graded pieces will be written $V(i) = V_i = \Gamma_i$. Then V is said to be an I-graded vector space, and $\mathrm{GrAut}(V) \subset \mathrm{GL}(V)$ will denote the group of graded automorphisms.

3.2. Filtrations. Now suppose the set I is given a total ordering $\leq$. An *I-filtered vector space* is a pair (V, F) where V is a complex vector space and F is a filtration of V indexed by I, i.e. a collection of subspaces $F_i \subset V$ for each $i \in I$ such that if $i \leq j$ then $F_i \subset F_j$. We will sometimes write $F(<i) = \sum_{j<i} F_j$, and $F(i) = F_i$. Here $j < i$ means that $j \leq i$ and $j \neq i$ (with this understood the order is determined equivalently by the binary relation $<$ or $\leq$). A map between I-filtered vector spaces $(V, F), (W, G)$ is a linear map $\varphi : V \to W$ such that $\varphi(F_i) \subset G_i$ for all $i \in I$.

The *associated graded vector space* of (V, F) is the I-graded vector space with graded pieces $\mathrm{Gr}_i(V, F) := F(i)/F(<i)$, i.e. it is the external direct sum

$$\mathrm{Gr}(V, F) := \bigoplus_I \mathrm{Gr}_i(V, F), \qquad \mathrm{Gr}_i(V, F) := F(i)/F(<i).$$

A map $\varphi : (V, F) \to (W, G)$ of I-filtered vector spaces induces a map $\mathrm{Gr}(\varphi) : \mathrm{Gr}(V, F) \to \mathrm{Gr}(W, G)$ of graded vector spaces. By definition the multiplicity (or *dimension vector*) $\Theta : I \to \mathbb{N}$ of a filtered vector space is that of its associated graded. Thus given (V, F) then $i \in I$ will be said to be active if $\mathrm{Gr}_i(F)$ is nonzero.

Recall that a flag (of subspaces of V) is a nested collection of distinct subspaces $0 = V_0 \subset V_1 \subset V_2 \subset \cdots V_{k-1} \subset V_k = V$ for some k. It is *full* if $\dim(V_i) = i$. Thus an I-filtration consists of the choice of a flag plus the choice of a labelling of the subspaces by elements of I. If the dimension vector (and the ordering of I) is fixed then there is unique labelling, so choosing a filtration with a given dimension vector is the same as choosing a flag (with the subspaces of the right dimensions).

Since I is ordered, an I-grading Γ of V determines a filtration $\mathcal{F} = \mathcal{F}(\Gamma, \leq)$ of V defined by:

$$\mathcal{F}_i := \bigoplus_{k \leq i} \Gamma(k).$$

This is the "associated filtration" determined by the ordering.

3.3. Splittings. A *splitting* of an I-filtered vector space (V, F) is the choice of an I-grading Γ of V such that F equals the associated filtration $\mathcal{F}(\Gamma, \leq)$.

It will be useful to think of splittings in terms of isomorphisms with the associated graded, as follows. Let (V, F) be an I-filtered vector space. Let $\mathbb{F}$ denote the associated filtration of $\mathrm{Gr}(V, F)$ so that $\mathbb{F}_i = \bigoplus_{j \leq i} \mathrm{Gr}_j(V, F)$. Clearly the filtration $\mathbb{F}$ has a preferred splitting, so we can canonically identify its associated graded with $\mathrm{Gr}(V, F)$.

LEMMA 3.1. *Giving a splitting of* (V, F) *is the same as giving an isomorphism*

$$\Phi : (\mathrm{Gr}(V, F), \mathbb{F}) \xrightarrow{\cong} (V, F)$$

of filtered vector spaces such that the associated graded map

$$\mathrm{Gr}(\Phi) : \mathrm{Gr}(V, F) \to \mathrm{Gr}(V, F)$$

is the identity, i.e. the map $\mathrm{Gr}_i(F) \xrightarrow{\Phi} F_i \twoheadrightarrow \mathrm{Gr}_i(F)$ *is the identity for each* $i \in I$.

Proof. Straightforward. Given such Φ, the splitting is given by $\Gamma_i = \Phi(\mathrm{Gr}_i(V, F))$. Conversely, given a splitting, the map $\Gamma_i \hookrightarrow F_i \twoheadrightarrow \mathrm{Gr}_i(V, F)$ is an isomorphism and its inverse gives the i-component of Φ. □

This will be crucial to define the wild monodromy automorphism determined by a pair of compatible gradings, and motivate the notion of Stokes local system.

3.4. Wild monodromy—Relative positions of pairs of gradings. Given two bases of a vector space V (indexed by the same set) it is obvious that there is a unique automorphism of V taking one basis to the other. However if only the underlying gradings are given (and not the bases themselves) then in general there is not a preferred automorphism taking one grading to the other. However it turns out that, for a special class of pairs of gradings, there is indeed a preferred automorphism taking one grading to the other (uniquely determined by the gradings).

Suppose I is a set and V is a vector space. Two I-gradings Γ_1, Γ_2 of V are *compatible* if there is some ordering $\leq$ of I such that the associated filtrations are equal:

$$\mathcal{F}(\Gamma_1, \leq) = \mathcal{F}(\Gamma_2, \leq). \tag{3.1}$$

Thus this common filtration is split by both gradings. Note this implies both gradings have the same dimension vector. Also note that if Γ_1, Γ_2 are compatible, then there may well be several different orderings for which their filtrations are equal. The aim here is to show there is a preferred automorphism relating any two compatible gradings.

Indeed if F denotes the common filtration (3.1) then Lemma 3.1 implies there are distinguished linear isomorphisms

$$\Phi_1, \Phi_2 : \mathrm{Gr}(V, F) \to V$$

determined by the splittings Γ_1, Γ_2 respectively, so there is a preferred automorphism

$$g = g(\Gamma_1, \Gamma_2) = \Phi_2 \circ \Phi_1^{-1} \in \mathrm{GL}(V)$$

taking Γ_1 to Γ_2, the *wild monodromy.* Of course since the gradings are given, it is simpler to work with the inverse $\Psi_i := \Phi_i^{-1}$, which is just the natural graded

isomorphism

$$\Psi_i : (V, \Gamma_i) \xrightarrow{\cong} \mathrm{Gr}(V, F), \qquad \text{so that } g = \Psi_2^{-1} \circ \Psi_1.$$

An analysis of the set of splittings of a given filtration enables to see it is independent of the choice of F. Fix an ordering $\leq$ of I and an I-filtration F of V. Let Θ be its dimension vector. Let $\mathcal{G}$ be the set of all I-gradings of V of dimension Θ, and let $\mathrm{Splits}(F) \subset \mathcal{G}$ be the set of all I-gradings that split F, i.e. the gradings Γ such that $\mathcal{F}(\Gamma, \leq) = F$.

The group $G = \mathrm{GL}(V)$ acts transitively on $\mathcal{G}$, so $\mathcal{G}$ is a homogeneous space. Given a basepoint $\Gamma_1 \in \mathcal{G}$ then the map $G \twoheadrightarrow \mathcal{G}; g \mapsto g(\Gamma_1)$ identifies $\mathcal{G} \cong G/H$ where $H = \mathrm{GrAut}(V, \Gamma_1) \subset G$.

In this way the subset $\mathrm{Splits}(F) \subset \mathcal{G}$ corresponds to the subset $P/H \subset G/H$ where $P = P(F) = \mathrm{Aut}(V, F) \subset G$ is the group of filtered automorphisms (i.e. the parabolic subgroup fixing the flag underlying F).

Now the quotient $P \to P/H$ has a natural slice: the unipotent radical $U = U(F) = \mathrm{Rad}_u(P) \subset P$ is the maximal unipotent normal subgroup of P, and it has the property that the product map $U \times H \to P$ is an isomorphism of varieties (P is isomorphic as a group to the semidirect product $H \rtimes U$)[1]. Thus the above map $G \twoheadrightarrow \mathcal{G}$ restricts to an isomorphism $U(F) \cong \mathrm{Splits}(F)$, mapping U isomorphically onto $\mathrm{Splits}(F)$.

More intrinsically this shows that $\mathrm{Splits}(F)$ is a torsor (principal homogeneous space) for $U(F)$—the natural action of $U(F)$ on $\mathrm{Splits}(F)$ is free and transitive. In particular for any two elements $\Gamma_1, \Gamma_2 \in \mathrm{Splits}(F)$ there is a unique element $g = g(\Gamma_1, \Gamma_2) \in U(F)$ such that $g(\Gamma_1) = \Gamma_2$ (it equals the wild monodromy as that has this property). This element $g \in \mathrm{GL}(V)$ is in fact uniquely determined by the pair Γ_1, Γ_2 and does not depend on the choice of filtration F that they both split:

Lemma 3.2. *If Γ_1, Γ_2 are two compatible gradings then there is a preferred unipotent element $g = g(\Gamma_1, \Gamma_2) \in \mathrm{GL}(V)$ taking Γ_1 to Γ_2, the wild monodromy automorphism. It is the unique element $g \in \mathrm{GL}(V)$ such that $g(\Gamma_1) = \Gamma_2$ and $\mathrm{Gr}(g) = 1 \in \mathrm{GrAut}(\mathrm{Gr}(V, F))$, for any filtration F split by both gradings.*

Proof. It just remains to show that if the gradings give the same filtration for two different orderings then the wild monodromy elements are the same: Let F_1, F_2 be the two filtrations (for two different orderings), and suppose

$$\Gamma_1, \Gamma_2 \in \mathrm{Splits}_{12} := \mathrm{Splits}(F_1) \cap \mathrm{Splits}(F_2).$$

The result then follows from the fact that Splits_{12} is a torsor for the group $U(F_1) \cap U(F_2)$, which is the unipotent radical of $P(F_1) \cap P(F_2)$. □

Note in general (in the non-toral case) the wild monodromy is not the only unipotent element taking one grading to the other. In practice extra choices are often made to give bases—the discussion here shows in general that the resulting automorphism only depends on the gradings. The following easy lemma will be useful.

Lemma 3.3. *Suppose Γ_1, Γ_2 are compatible I-gradings of V with wild monodromy $g = g(\Gamma_1, \Gamma_2) \in \mathrm{GL}(V)$. If $v \in \Gamma_1(i) \cap \Gamma_2(i)$ for some $i \in I$ then $g(v) = v$.*

[1] In concrete terms, choosing suitable bases, P is a block upper triangular subgroup of G, H is the block diagonal subgroup of P, and U is the subgroup of P with an identity matrix in each diagonal block.

Proof. It is clear that $\Psi_1(v) = \Psi_2(v)$, so the result follows. □

EXAMPLE 3.4. If $\dim(V) = \#I = 2$ and $\mathcal{G}$ is the set of full I-gradings of V, then $\mathcal{G}$ is just the space of injective maps $\Gamma : I \hookrightarrow \mathbb{P}(V)$, since any two distinct lines in V are linearly independent. In other words it is the space of pairs of distinct points of the sphere $\mathbb{P}(V)$, labelled by I. If $I = \{1, x\}$ then two gradings Γ_1, Γ_2 are compatible if and only if either $\Gamma_1(1) = \Gamma_2(1)$ or $\Gamma_1(x) = \Gamma_2(x)$. If F is the filtration determined by Γ_1 with the ordering $1 < x$, then the filtration is just $F(1) = \Gamma_1(1) \subset F(x) = V$. Thus $\mathrm{Splits}(F)$ is the space of maps $\Gamma : I \hookrightarrow \mathbb{P}(V)$ such that $\Gamma(1) = F(1)$. This amounts to the choice of a point

$$\Gamma(x) \in \mathbb{P}(V) \setminus \{F(1)\}$$

of the affine line given by the sphere punctured at $F(1)$. Thus

$$\mathrm{Splits}(F) = \mathbb{P}(V) \setminus \{F(1)\} \cong \mathbb{A}^1.$$

It is a torsor for the group $U(F) \cong \{\left(\begin{smallmatrix} 1 & * \\ 0 & 1 \end{smallmatrix}\right)\} \cong \mathbb{A}^1$.

3.5. Median gradings. If Γ_0, Γ_1 are two compatible I-gradings of V let $g = g(\Gamma_0, \Gamma_1) \in \mathrm{GL}(V)$ be the wild monodromy relating them, so that $\Gamma_1 = g(\Gamma_0)$. Since g is unipotent it has a unique unipotent square root $\sqrt{g} \in \mathrm{GL}(V)$ and so the *median grading*

$$\Gamma_{1/2} := \sqrt{g}(\Gamma_0)$$

is well defined. Of course $\sqrt{g} = g(\Gamma_0, \Gamma_{1/2}) = g(\Gamma_{1/2}, \Gamma_1)$. More generally there is a canonically defined path of gradings $\{\Gamma_t \mid t \in [0,1]\}$ connecting Γ_0 to Γ_1 given by $\Gamma_t := g_t(\Gamma_0)$ where $g_t = \exp(tX)$ for the unique nilpotent logarithm X of g.

In the example above with $\dim(V) = 2$, the median grading between two points of $\mathcal{G}(F) \cong \mathbb{A}^1$ is just the midpoint of the real line segment in $\mathbb{A}^1$ between them.

This appears classically as the way to get real bases/gradings of a real differential equation (cf. [**33**] p.8, [**47**] p.358). The main statement boils down to the following. Suppose I is a set, $V_{\mathbb{R}}$ is a real vector space and $V = \mathbb{C} \otimes V_{\mathbb{R}}$ is its complexification.

LEMMA 3.5. *If Γ_0, Γ_1 are compatible I-gradings of V such that $\Gamma_0 = \overline{\Gamma_1}$, then $\Gamma_{1/2}$ is* real.

Proof. Write $g = g(\Gamma_0, \Gamma_1), s = \sqrt{g}$. Note $\Gamma_0 = \overline{g}\overline{\Gamma_0} = \overline{g}\Gamma_1$ and $\Gamma_0 = g^{-1}\Gamma_1$, so by uniqueness $\overline{g} = g^{-1}$, so that $g = \exp(X)$ for a unique nilpotent X such that $\overline{X} = -X$. Thus $s = \exp(X/2)$ satisfies $\overline{s} = s^{-1}$ and the result follows:

$$\overline{\Gamma_{1/2}} = \overline{s}\overline{\Gamma_0} = s^{-1}\Gamma_1 = s^{-1}g\Gamma_0 = \Gamma_{1/2}.$$

□

3.6. Bounding the wild monodromy. Suppose I is a set equipped with a partial order $\prec$. Thus $\prec$ is a subset of $I \times I$ satisfying various axioms. The pair $(I, \prec)$ can be viewed as a quiver where a relation $i \prec j$ corresponds to an arrow $i \leftarrow j$. The choice of $\prec$ can be used to restrict the wild monodromy, as follows.

Recall that a total order $<$ on I is said to "extend the partial order $\prec$", if $\prec$ is a subset of $<$ (they are both subsets of $I \times I$).

DEFINITION 3.6. The wild monodromy of a pair of compatible I-gradings Γ_1, Γ_2 of V is "bounded by $\prec$", or "satisfies the Stokes conditions", if the associated filtrations

$$\mathcal{F}(\Gamma_1, <) = \mathcal{F}(\Gamma_2, <) \tag{3.2}$$

are equal, for any total order $<$ extending $\prec$.

REMARK 3.7. For example if $\prec$ is empty this just means that $\Gamma_1 = \Gamma_2$.

The Stokes condition can be reformulated in terms of Stokes groups as follows. For $k = 1, 2$ let $\mathbb{S}\mathrm{to}_k \subset \mathrm{GL}(V)$ be the connected unipotent group with Lie algebra

$$\mathrm{Lie}(\mathbb{S}\mathrm{to}_k) = \bigoplus_{i \prec j} \mathrm{Hom}(\Gamma_k(j), \Gamma_k(i)) \subset \mathrm{End}(V). \tag{3.3}$$

Note $\mathrm{Lie}(\mathbb{S}\mathrm{to}_k)$ is the space of representations of the quiver $(I, \prec)$ on (V, Γ_k)[2]. Consider the set $\mathrm{GrIso}_{12} = \{g \in \mathrm{GL}(V) \mid g(\Gamma_1(i)) = \Gamma_2(i) \text{ for all } i \in I\}$ of graded isomorphisms from $(V, \Gamma_1,)$ to (V, Γ_2).

LEMMA 3.8. *The following conditions are equivalent:*
1) $\mathrm{GrIso}_{12} \cap \mathbb{S}\mathrm{to}_1 \neq \varnothing$, *2)* $\mathrm{GrIso}_{12} \cap \mathbb{S}\mathrm{to}_2 \neq \varnothing$,
3) $g(\Gamma_1, \Gamma_2) \in \mathbb{S}\mathrm{to}_1$, *4)* $g(\Gamma_1, \Gamma_2) \in \mathbb{S}\mathrm{to}_2$,
5) The gradings Γ_1, Γ_2 *satisfy the Stokes conditions determined by* $\prec$.
If so, $\mathbb{S}\mathrm{to}_1 = \mathbb{S}\mathrm{to}_2$ *and both sets 1),2) contain exactly one point* $g(\Gamma_1, \Gamma_2) \in \mathrm{GL}(V)$.

Proof. If Γ_1 is fixed then any other I-grading Γ_2 of V (with the same dimensions as Γ_1) can be specified by choosing an element $g \in \mathrm{GL}(V)$ and defining $\Gamma_2(i) = g(\Gamma_1(i))$. Then $g \in \mathrm{GrIso}_{12}$. Moreover the two Stokes groups in $\mathrm{GL}(V)$ determined by the two gradings are then conjugate by g: $\mathbb{S}\mathrm{to}_2 = g \circ \mathbb{S}\mathrm{to}_1 \circ g^{-1}$. Now suppose we fix both gradings and assume $g \in \mathrm{GrIso}_{12}$. Then it is immediate that $g \in \mathbb{S}\mathrm{to}_1$ if and only if $g \in \mathbb{S}\mathrm{to}_2 = g\,\mathbb{S}\mathrm{to}_1\, g^{-1}$, proving 1) and 2) are equivalent. Moreover if $g \in \mathbb{S}\mathrm{to}_1$ then clearly $\mathbb{S}\mathrm{to}_2 = g\,\mathbb{S}\mathrm{to}_1\, g^{-1} = \mathbb{S}\mathrm{to}_1$. If moreover $g_1 \in \mathrm{GrIso}_{12} \cap \mathbb{S}\mathrm{to}_1$ then $g^{-1}g_1 \in \mathbb{S}\mathrm{to}_1 \cap \mathrm{Aut}(V, \Gamma_1) = \{1\}$ so $g_1 = g$. This shows the last statement holds and establishes the equivalence with 3,4). Finally to see 1-4) are equivalent to 5) observe that the Stokes group is the unipotent radical of the intersection of the parabolic subgroups preserving $\mathcal{F}(\Gamma_1, <)$, as $<$ varies. □

3.7. Stokes conditions on pairs of filtrations. The above discussion will be used to control the jumps of the Stokes gradings across $\mathbb{A}$. The jumps of the Stokes filtrations across $\mathbb{S}$ are controlled as follows.

Let I be a set equipped with two orders $<_1, <_2$. Write $I_1 = (I, <_1), I_2 = (I, <_2)$ for the corresponding ordered sets. Fix a complex vector space V and let F_1 be an I_1-filtration of V, and let F_2 be an I_2-filtration of V, both with the same dimension vector $\Theta : I \to \mathbb{N}$.

DEFINITION 3.9. The pair of filtrations (F_1, F_2) "satisfy the Stokes conditions" if there is an I-grading Γ of V of dimension Θ such that

$$F_1 = \mathcal{F}(\Gamma, <_1) \quad \text{and} \quad F_2 = \mathcal{F}(\Gamma, <_2). \tag{3.4}$$

[2]The general fact used here is that if V is I-graded then a partial order $\prec$ on I determines a unipotent subgroup $\mathbb{S}\mathrm{to}_\prec$ of $\mathrm{GL}(V)$ whose Lie algebra is the space of representations of the quiver $(I, \prec)$ on V.

The notion of relative position of pairs of flags has been much studied (cf. [**31**] p.116) and one can show that the Stokes conditions above are the same as fixing the relative position of the pair of flags to be that determined by the pair of orderings (although, beyond the toral case, not every possible relative position will arise in the Stokes setting).

4. Topological basics

4.1. Local systems, transport, monodromy. Recall that if M is a connected topological manifold then a local system of sets I on M is a locally constant sheaf of sets, and that this is the same thing as (the sections of) a covering space $I \to M$. Given an open cover of M then I can be described in terms of *constant* clutching maps.

A local system of vector spaces is a local system $V \to M$ for which the fibres are vector spaces and this structure is preserved (the clutching maps are constant linear isomorphisms).

Given a local system $V \to M$ then a path γ in M from p to q determines an isomorphism

$$\rho_\gamma = \rho(\gamma) : V_p \to V_q$$

between the corresponding fibres, the parallel transport map. (It is defined since the path has a unique lift to the covering once the initial point in V_p is specified.) Homotopic paths give the same map. In particular if a basepoint $b \in M$ is fixed then the monodromy representation

$$\rho : \pi_1(M, b) \to \mathrm{Aut}(V_b)$$

is defined by transporting points of the fibre V_b around loops. Two local systems V, V' are isomorphic if and only if there is an isomorphism $V_b \cong V'_b$ intertwining their monodromy representations.

If V is a local system of rank n vector spaces then a framing of V at $b \in M$ is a basis of the fibre of V at b, i.e. an isomorphism $\phi : \mathbb{C}^n \to V_b$. Given a framing, the monodromy representation can be viewed as taking values in $\mathrm{GL}_n(\mathbb{C})$.

4.2. Graded local systems. If $I \to M$ is a fixed covering space, then an "I-graded local system" (of vector spaces) is a local system $V \to M$ of vector spaces together with a pointwise grading

$$V_p = \bigoplus_{i \in I_p} V_p(i)$$

of the fibres of V by the fibres of I, such that the grading is locally constant, i.e.

$$\rho_\gamma(V_p(i)) = V_q(\rho_\gamma(i))$$

for any path γ from p to q (where $\rho_\gamma(i) \in I_q$ is the parallel transport of $i \in I_p$). This is the same thing as a local system on the covering space I, but viewed from M.

4.3. Real oriented blow-ups and tangential basepoints. If Σ is a smooth complex algebraic curve and $a \in \Sigma$, the real oriented blow-up of Σ at a is the surface with boundary

$$\pi : \widehat{\Sigma} \to \Sigma$$

obtained by replacing the point a by the circle

$$\partial = (T_a\Sigma \setminus \{0\})/\mathbb{R}_{>0}$$

of real oriented directions emanating from a. Here $T_a\Sigma$ is the tangent space. Thus π restricts to an isomorphism $\widehat{\Sigma} \setminus \partial \cong \Sigma^\circ := \Sigma \setminus \{a\}$ onto the punctured surface.

A useful construction is the following: If $V \to \Sigma^\circ$ is a local system of n-dimensional vector spaces and $d \in \partial$, then there is a well defined complex vector space V_d of dimension n, the "fibre of V at the tangential basepoint d". One approach is to note that the inclusion $\Sigma^\circ \to \widehat{\Sigma}$ is a homotopy equivalence so restricting local systems on $\widehat{\Sigma}$ to Σ° gives an equivalence of categories. (Any covering of Σ° extends uniquely to $\widehat{\Sigma}$.) In this way local systems on Σ° and on $\widehat{\Sigma}$ will henceforth be viewed as the same thing. Then V_d is the fibre of $V \to \widehat{\Sigma}$ at the tangential basepoint $d \in \partial \subset \widehat{\Sigma}$. More concretely V_d is the space of sections of V on germs of open sectors (in Σ°) at a containing the direction d (cf. [**30**] p.85, [**44**] p.386).

4.4. Extended intervals/sectors. Suppose $a \in \Sigma$ and $\pi : \widehat{\Sigma} \to \Sigma$ is the real oriented blow-up at a, and ∂ is the circle $\pi^{-1}(a) \subset \widehat{\Sigma}$. This section will set up notation for universal covers $\widetilde{\partial}$ of ∂ and intrinsically extending a local system on ∂ to a sector/interval in $\widetilde{\partial}$.

1) The notion of angle is well defined so there is an intrinsic action of $\mathbb{R}$ on ∂. Thus if $d \in \partial$ and $\alpha \in \mathbb{R}$ then $d \pm \alpha$ are well-defined points of ∂.

2) The choice of a point $d \in \partial$ determines a universal covering $\widetilde{\partial}$ of ∂, namely the homotopy classes of paths starting at d. It comes equipped with a covering map $\widetilde{\partial} \twoheadrightarrow \partial$ (taking a path to its endpoint) and with a point $\widetilde{d} \in \widetilde{\partial}$ lying over d (i.e. the trivial path).

Now, for positive $\alpha, \beta \in \mathbb{R}$ define $\mathrm{Sect}_d(-\alpha, \beta)$ to be the interval $(\widetilde{d}-\alpha, \widetilde{d}+\beta) \subset \widetilde{\partial}$ in the universal cover determined by d. Similarly $\mathrm{Sect}_d[-\alpha, \beta) = [\widetilde{d} - \alpha, \widetilde{d} + \beta)$ etc. If $U \subset \partial$ is an interval, define

$$\mathrm{Sect}_U(-\alpha, \beta) = \bigcup_{d \in U} \mathrm{Sect}_d(-\alpha, \beta). \tag{4.1}$$

3) For any positive $\alpha, \beta \in \mathbb{R}$, a local system $V \to \partial$ canonically determines a local system $\widetilde{V} \to \mathrm{Sect}_d(-\alpha, \beta)$, and $V_d = \widetilde{V}_{\widetilde{d}}$. It is defined as the pullback of V along the (étale) map $\mathrm{Sect}_d(-\alpha, \beta) \to \partial$. For small α, β this is just the restriction to $(d - \alpha, d + \beta) \subset \partial$. There is a canonical bijection between V_d and the space of sections of $\widetilde{V}$ on $\mathrm{Sect}_d(-\alpha, \beta)$ for any α, β (taking a section to its value in $\widetilde{V}_{\widetilde{d}} = V_d$).

5. Irregular classes and associated topological data

Fix $\mathbf{a} \subset \Sigma$ as in §2. Let $\widehat{\Sigma} \to \Sigma$ be the real oriented blow-up, with boundary ∂ (a finite set of circles), cf. §4.3. The aim of this section is to recall the notion of irregular class (from [**25**]) and to show (following mainly [**6**, **29**, **42**, **44**, **47**]) that this determines the following (topological) data:

1) an integer n (the rank),

2) a finite cover $I \to \partial$,

3) a dimension vector for I, i.e. a map $\Theta : I \to \mathbb{N}_{>0}$ constant on each component circle, such that $\sum_{i \in I_d} \Theta(i) = n$ for all $d \in \partial$,

3) two finite sets $\mathbb{A}, \mathbb{S} \subset \partial$

4) A total order $<_d$ of I_d for each $d \in \partial \setminus \mathbb{S}$ (constant as d moves in each component of this set)

5) A partial order $\prec_d$ of I_d for each singular direction $d \in \mathbb{A}$, the Stokes arrows.

This data alone will be sufficient to define the topological data classifying connections in the next three sections, so the topologically minded reader could (in the first instance) skip the following discussion and jump to §6.

5.1. Exponential local system. The exponential local system is a natural covering space (local system of sets) $\pi : \mathcal{I} \to \partial$. To simplify notation suppose $\mathbf{a} = \{a\}$ is just one point so ∂ is a single circle (the extension to multiple points is immediate). If z is a local coordinate on Σ vanishing at a then local sections of $\mathcal{I}$ over open subsets of ∂ are functions that may be written as finite sums of the form

$$q = \sum a_i z^{-k_i} \tag{5.1}$$

where $a_i \in \mathbb{C}$, and $k_i \in \mathbb{Q}_{>0}$. An intrinsic (coordinate independent) construction of $\mathcal{I}$ is given in [**25**] Rmk 3 (in which case sections of $\mathcal{I}$ are certain equivalence classes of functions, but that will make no difference in the use of these functions below). Thus $\mathcal{I}$ is the disjoint union of a vast collection of circles $\langle q \rangle$, each of which is a finite cover of ∂. A local function q determines the circle $\langle q \rangle$ by analytic continuation around ∂. Thus algebraically $\langle q \rangle$ encodes the Galois orbit of q. Let $\mathrm{Ram}(q)$ denote the degree of the cover $\pi : \langle q \rangle \to \partial$ (the lowest common multiple of the denominators of the k_i present in the expression for q). The *slope* of $\langle q \rangle$ is the largest k_i occuring in (5.1). The *tame circle* is the circle $\langle 0 \rangle \subset \mathcal{I}$. The functions q occur as the exponents of the exponential factors e^q that occur in local solutions of meromorphic differential equations (hence the name "exponential local system"). An isomorphic local system $d\mathcal{I}$ (whose sections are one-forms) was used in [**29**, **44**].

5.2. Irregular classes. An irregular class is a map (a dimension vector) $\Theta : \mathcal{I} \to \mathbb{N}$, assigning an integer to each component of $\mathcal{I}$, equal to zero for all but a finite number of circles. (Thus Θ is constant on each component circle, so amounts to a map $\pi_0(\mathcal{I}) \to \mathbb{N}$.) The *rank* of an irregular class is the integer

$$n = \mathrm{rk}(\Theta) = \sum_{i \in \mathcal{I}_d} \Theta(i) \in \mathbb{N} \tag{5.2}$$

for any $d \in \partial$. (If ∂ has several components then Θ should be such that the rank is the same for d in any component.)

A *finite subcover* is a subset $I \subset \mathcal{I}$ such that $\pi : I \to \partial$ is a finite cover. An irregular class determines a finite subcover, the *active exponents* $I = \Theta^{-1}(\mathbb{N}_{>0})$. Thus an irregular class is a finite subcover plus a positive integer for each component (we will often omit to write the integers and say that I is an irregular class).

Any $\mathcal{I}$-graded local system $V \to \partial$ of vector spaces has an irregular class (taking the dimensions of the graded pieces). It will thus follow that any connection determines an irregular class (the associated graded of its Stokes filtration is an $\mathcal{I}$-graded local system).

Given irregular classes I_1, I_2 then there are well-defined irregular classes $I_1^\vee$, $\mathrm{End}(I_1)$, $I_1 \otimes I_2$, $\mathrm{Hom}(I_1, I_2) = I_2 \otimes I_1^\vee$. In brief if $V_k \to \partial$ is any I_k-graded local system for $k = 1, 2$ then these are the irregular classes of $V_1^\vee$, $\mathrm{End}(V_1)$, $V_1 \otimes V_2$, $\mathrm{Hom}(V_1, V_2)$ respectively. For example $\langle q \rangle^\vee = \langle -q \rangle$ and $\langle q_1 \rangle \otimes \langle q_2 \rangle$ may be computed by writing $q_1 = \sum a_i t^i, q_2 = \sum b_i t^i$ where $t^r = z^{-1}$ for some integer

$r \geq 1$ and then considering the Galois closed list $q_1(\zeta^a t) + q_2(\zeta^b t)$ of sums of the various Galois conjugates, where $\zeta = \exp(2\pi i/r)$.

The *levels* of a class I are the nonzero slopes of the component circles of $\mathrm{End}(I)$.

5.3. Irregular curves/wild Riemann surfaces. A rank n (bare) irregular curve is a triple $\mathbf{\Sigma} = (\Sigma, \mathbf{a}, \Theta)$ where Σ is a smooth compact complex algebraic curve, $\mathbf{a} \subset \Sigma$ is a finite set and Θ is a rank n irregular class (for each point of $\mathbf{a}$). $\mathbf{\Sigma}$ is *tame* if Θ is tame (i.e. only involves the tame circle with multiplicity n at each marked point). Thus, specifying a rank n tame curve is the same as choosing a curve with marked points.

If $\Sigma^\circ = \Sigma \backslash \mathbf{a}$ then any algebraic connection $(E, \nabla) \to \Sigma^\circ$ determines an irregular curve $(\Sigma, \mathbf{a}, \Theta)$ taking the irregular classes at each marked point. Similarly any meromorphic connection on a vector bundle on Σ determines an irregular curve, taking its polar divisor and irregular classes.

An *irregular type* is similar to an irregular class but involves an ordering of the active exponents (the component circles in I). Thus an irregular type determines an irregular class by forgetting the ordering. One can then define non-bare (dressed) irregular curves, involving irregular types, and an ordering of the points $\mathbf{a}$ (cf. [**18**] Rmk 10.6, [**25**] §4).

5.4. Stokes directions and exponential dominance orderings. By looking at the exponential growth rates, there is a partial ordering $<_d$ (exponential dominance) on each fibre of $\mathcal{I}$, as follows. Suppose $d \in \partial$ and $q_1, q_2 \in \mathcal{I}_d$ are distinct then (by definition)

$$q_1 <_d q_2$$

if $\exp(q_1 - q_2)$ is flat (has zero asymptotic expansion) on some open sectorial neighbourhood of d. As usual $i \leq_d j$ means $i <_d j$ or $i = j$. Given an irregular class Θ with active exponents I then $<_d$ restricts to a partial order on the fibre I_d of I. Since I is a finite cover, this is actually a total order for all but a finite number of points $\mathbb{S} \subset \partial$, the *Stokes directions* (or oscillating directions) of the class Θ. Thus if $d \in \partial \setminus \mathbb{S}$ then I_d is totally ordered by $<_d$.

5.5. Singular directions and Stokes arrows. The points of maximal decay form a subset $\mathfrak{d} \subset \mathcal{I}$ consisting of the points where the functions e^q have maximal decay, as q moves in $\langle q \rangle$. (Sometimes they will be called p.o.m.s or *apples*.) Each circle $\langle q \rangle$ has a finite number of apples, except the tame circle which has none. The *Stokes arrows* are the pairs $(q_1, q_2) \in \mathcal{I} \times \mathcal{I}$ such that $\pi(q_1) = \pi(q_2)$ (so they are both in the same fibre of $\mathcal{I}$) and $q_1 - q_2 \in \mathcal{I}$ is a point of maximal decay. In this case write $q_1 \prec_d q_2$, where $d = \pi(q_1)$. It is viewed as an arrow from q_2 to q_1. This defines a partial order on each fibre $\mathcal{I}_d$ and exponential dominance refines it (if $q_1 \prec_d q_2$ then $q_1 <_d q_2$).

Given an irregular class Θ with active exponents I then there are only a finite number of Stokes arrows in $I \times I$. They correspond to the points of maximal decay of the class $\mathrm{End}(I)$. The Stokes arrows lie over a finite set $\mathbb{A} \subset \partial$, the *singular directions* (or anti-Stokes directions). The corresponding *Stokes quiver* at $d \in \mathbb{A}$ is the quiver with nodes I_d and arrows $\prec_d$. As in (3.3) the Stokes arrows then determine the Stokes groups

$$\mathbb{S}\mathrm{to}_d = \mathbb{S}\mathrm{to}_{\prec_d} \subset \mathrm{GL}(V_d^0)$$

for any I-graded local system $V^0 \to \partial$. The following lemma will be useful later.

LEMMA 5.1. *Suppose $d \in \mathbb{A}$ and $i, j \in I_d$ are such that $i \prec_d j$. Then there is an open subset $U \subset \partial$ with $d \in U$ such that $i <_e j$ for all $e \in U$.*

Proof. This follows as d is a point of maximal decay for the continuous function $e^{q_i - q_j}$. □

5.6. Simple example. Consider Weber's equation $y'' = (x^2/4 + \lambda)y$ where $\lambda \in \mathbb{C}$ (the equation for the parabolic cylinder functions) and the corresponding connection $\nabla = d - A, A = \begin{pmatrix} 0 & 1 \\ x^2/4+\lambda & 0 \end{pmatrix} dx$. This has just one singularity, at $x = \infty$. Thus $\Sigma = \mathbb{P}^1, \Sigma^\circ = \mathbb{C}$ and $\widehat{\Sigma}$ is a closed disk with boundary circle ∂ (the radial compactification of $\mathbb{C}$). A short computation, or a glance at [**1**] §19.8, shows the formal solutions at ∞ involve the multivalued functions $f_\pm = \exp(q_\pm)x^{\pm\lambda - 1/2}$ where $q_\pm = \pm x^2/4$. The exponential factors $\exp(q_\pm)$ here are the main contributors to the behaviour of solutions near $x = \infty$, and their dominance is encoded in the Stokes diagram in the figure. (Such a diagram for the Airy equation appeared in Stokes' original paper [**57**] and was reproduced in [**25**].) From this we see immediately the oscillating directions $\mathbb{S} \subset \partial$ are the four directions with argument $\pi/4 + k\pi/2$ (where the dominance changes), and the singular directions $\mathbb{A} \subset \partial$ are the real and imaginary axes (where the ratio of dominances is largest). In general such diagrams are difficult to define/draw precisely (especially in the multi-level case), but we can define the circles that appear, as a finite cover $\pi : I \to \partial$, and then view the Stokes diagram as a (non-intrinsic) projection of I to the plane. In this example $I = \langle q_+ \rangle \sqcup \langle q_- \rangle \to \partial$, with each circle $\langle q_\pm \rangle$ a trivial degree one cover. The apples (points of maximal decay) are the four points of I that project to the four marked points on the diagram. They lie over the singular directions $\mathbb{A} \subset \partial$. There are four Stokes arrows, one over each point $d \in \mathbb{A}$, from the point of maximal growth to the point of maximal decay in $I_d = \pi^{-1}(d)$. (Fig. 1 arises for $I = \bigcup_1^3 \langle \alpha_i x^2 \rangle$, from the generic reading of the $\widehat{A}_2$ diagram, the triangle, related to Painlevé 4 [**14**].)

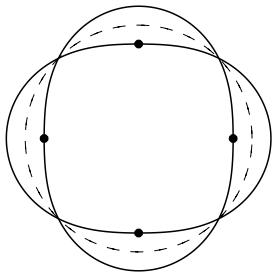

Stokes diagram of the Weber equation

5.7. Ramis exponential tori. Another topological object attached to an irregular class Θ is the local system $\mathbb{T} \to \partial$ of Ramis exponential tori, defined as follows. The character lattice $X^*(\mathbb{T}) \subset \mathcal{I} \to \partial$ of $\mathbb{T}$ is the local system of finite rank lattices (free $\mathbb{Z}$-modules) generated by the active exponents $I \subset \mathcal{I}$, so that $X^*(\mathbb{T})_d = \langle I_d \rangle_\mathbb{Z} \subset \mathcal{I}_d$. Then $\mathbb{T}$ is the local system of tori with this character lattice, so that $\mathbb{T}_d = \mathrm{Hom}(X^*(\mathbb{T})_d, \mathbb{C}^*)$. Note that if $V^0 \to \partial$ is an I-graded local system of vector spaces with dimension Θ, then V^0 can be viewed as graded by $X^*(\mathbb{T})$. This means there is a faithful action of $\mathbb{T}$ on V^0, i.e. an injective map $\mathbb{T} \to \mathrm{GL}(V^0)$ of local systems of groups. (These tori appear in the differential Galois group of the corresponding connections.)

6. Stokes filtered local systems

Recall that an irregular class $\Theta : \mathcal{I} \to \mathbb{N}$ determines the data $n, I, \mathbb{S}, <_d$.

A *Stokes filtration* F of type Θ on a local system $V \to \widehat{\Sigma}$ of complex vector spaces is the data of an I_d-filtration F_d of V_d of dimension Θ, for each $d \in \partial \setminus \mathbb{S}$, such that:

SF1) The F_d are locally constant as d varies in ∂ without crossing $\mathbb{S}$,
SF2) The Stokes condition (3.4) holds across each $d \in \mathbb{S}$.

To be precise, in 2) the filtrations on the left and right of $d \in \mathbb{S}$ are transported to the fibre V_d to get into the exact situation of (3.4). Thus in other words condition 2) says that there exists a local grading inducing the filtrations (i.e. a local splitting across d): there is a grading Γ of the local system V (by sub-local systems) throughout a small neighbourhood U of d in ∂, such that $F_e = \mathcal{F}(\Gamma, <_e)$ for all $e \in U \setminus \{d\}$. The condition 1) means parallel transport along any path in $\partial \setminus \mathbb{S}$ relates the filtrations.

Definition 6.1. A Stokes filtered local system is a triple (V, Θ, F) where $V \to \widehat{\Sigma}$ is a local system of vector spaces, Θ is an irregular class (of the same rank as V) and F is a Stokes filtration on V of type Θ.

Remark 6.2 (Robustness). Note that the definition is robust in the sense that if a finite number of points is added to $\mathbb{S}$ (and the filtrations F_d are not specified at these points), then nothing is changed since SF2) implies F is continuous across the missing points, and thus determined by neighbouring filtrations.

Two Stokes filtered local systems $\mathcal{V}_i = (V_i, \Theta_i, F^i)$ for $i = 1, 2$ are isomorphic if $\Theta_1 = \Theta_2$ and there is an isomorphism $\varphi : V_1 \to V_2$ of local systems relating the Stokes filtrations.

To define more general morphisms first note that if (V, Θ, F) is a Stokes filtered local system and $d \in \partial \setminus \mathbb{S}$ and $i \in \mathcal{I}_d$ then one can define

$$F_d(i) = \sum_{j \in I_d \ \mid \ j \leq_d i} F_d(j) \subset V_d. \tag{6.1}$$

Clearly if $i \leq_d j$ then $F_d(i) \subset F_d(j)$. Thus V_d can be viewed as filtered by the poset $\mathcal{I}_d$ and not just by the ordered set I_d. A morphism $\mathcal{V}_1 \to \mathcal{V}_2$ of Stokes filtered local systems is a morphism $\varphi : V_1 \to V_2$ of local systems that restricts to a map of $\mathcal{I}_d$-filtered vector spaces ($\varphi(F^1_d(i)) \subset F^2_d(i)$ for all $i \in \mathcal{I}_d$), for all $d \in \partial \setminus (\mathbb{S}_1 \cup \mathbb{S}_2)$.

If $\mathcal{V} = (V, \Theta, F)$ is a Stokes filtered local system, define a global section of $\mathcal{V}$ to be

$$v \in \mathrm{H}^0(\mathcal{V}, \widehat{\Sigma}) := \{v \in \mathrm{H}^0(V, \widehat{\Sigma}) \mid v(d) \in F_d\langle 0\rangle \text{ for all } d \in \partial \setminus \mathbb{S}\}$$

i.e. it is a global section of V such that $v(d) \in F_d\langle 0\rangle := F_d(\langle 0\rangle)$ for all points $d \in \partial \setminus \mathbb{S}$. Said differently, using the Stokes filtrations, define a section of V to have "moderate growth" in the direction $d \in \partial$ if $v(e) \in F_e\langle 0\rangle$ for all non-Stokes direction e in some open neighbourhood of d. Then $\mathrm{H}^0(\mathcal{V}, \widehat{\Sigma})$ is just the space of sections of V that have moderate growth everywhere. It will become clear later (Prop. 12.7) that $\mathcal{V}$ has no global sections unless the tame circle $\langle 0\rangle$ is active in the irregular class at each marked point.

The dual Stokes filtered local system $\mathcal{V}^\vee$ is defined as $(V^\vee, \Theta^\vee, F^\vee)$ where

$$F^\vee_d(q) = F_d(<-q)^\perp \subset V^\vee_d,$$

and the tensor product $\mathcal{V}_1 \otimes \mathcal{V}_2$ is $(V_1 \otimes V_2, \Theta_1 \otimes \Theta_2, F)$ where

$$F_d(q) = \sum_{q=q_1+q_2} F_d^1(q_1) \otimes F_d^2(q_2)$$

for generic d (but this is sufficient by Rmk 6.2). Thus one can define $\mathrm{Hom}(\mathcal{V}_1, \mathcal{V}_2) = \mathcal{V}_2 \otimes \mathcal{V}_1^\vee$ and observe that a morphism $\mathcal{V}_1 \to \mathcal{V}_2$ is the same thing as a global section of this Stokes filtered local system.

The definition used by Deligne and Malgrange is easily seen to be equivalent to this (this amounts to recognising, as in §10.1 below, that filtrations of V_d by $\mathcal{I}_d$ for $d \in \mathbb{S}$ are canonically determined too). Thus (the global version of) their Riemann–Hilbert–Birkhoff correspondence says that:

THEOREM 6.3. *The category of Stokes filtered local systems is equivalent to the category of algebraic connections (E, ∇) on vector bundles on Σ°.*

This was conjectured by Deligne [**29**] and proved by Malgrange [**44**] (using the earlier Malgrange–Sibuya cohomological classification). As remarked in [**46**] p.57, this is essentially equivalent to the statement of Jurkat [**40**]—this equivalence will be discussed in the sequel. The definition of the Stokes filtration of a connection will be discussed in Apx. A.

6.1. Returning to the simple example of §5.6, the Stokes filtrations (in this example) amount to recording the lines in V spanned by the subdominant (or recessive) solutions on each sector $\partial \setminus \mathbb{S}$. Intrinsically the filtrations are indexed by the components of $I \setminus \pi^{-1}(\mathbb{S})$ (totally ordered over each sector by the dominance of the exponential factors). Since V is trivial this amounts to specifying four one dimensional subspaces $L_0, L_1, L_2, L_3 \subset \mathrm{H}^0(V) \cong \mathbb{C}^2$ where L_k is the line of solutions which are recessive at ∞ when $\arg(x) = k\pi/2$. The Stokes condition (3.4) means that $L_i \neq L_{i+1}$ for all i (indices modulo 4).

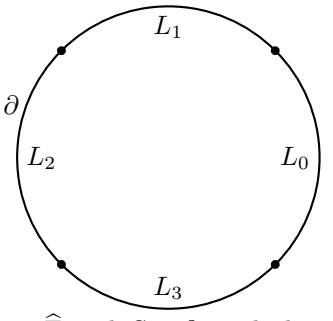

$\widehat{\Sigma}$ with $\mathbb{S} \subset \partial$ marked

7. Stokes graded local systems

Recall that an irregular class $\Theta : \mathcal{I} \to \mathbb{N}$ determines the data $n, I, \mathbb{A}, \prec_d$.

A *Stokes grading* Γ of type Θ of a local system $V \to \widehat{\Sigma}$ is the data of an I_d-grading Γ_d of V_d of dimension Θ, for each $d \in \partial \setminus \mathbb{A}$, such that:

SG1) The Γ_d are locally constant as d varies in ∂ without crossing $\mathbb{A}$,
SG2) The Stokes condition (3.2) holds across each $d \in \mathbb{A}$.

To be precise, in 2) the gradings on the left and right of $d \in \mathbb{A}$ are transported to the fibre V_d to get into the exact situation of (3.2).

DEFINITION 7.1. A Stokes graded local system is a triple (V, Θ, Γ) where $V \to \widehat{\Sigma}$ is a local system of vector spaces, Θ is an irregular class (of the same rank as V) and Γ is a Stokes grading on V of type Θ.

Again the definition is robust, by Rmk 3.7.

Note that if $d \in \mathbb{A}$ and $L, R \in \partial$ are points just to the left and right of d, then there are *two* distinguished isomorphisms $V_L \to V_R$: one given by the transport of the local system V, and the other given by the graded isomorphism (*wild transport*)

$$(V_L, \Gamma_L) \cong (V_d, \Gamma_L) \xrightarrow{g} (V_d, \Gamma_R) \cong (V_R, \Gamma_R) \tag{7.1}$$

where the first and third isomorphisms come from the local system structure of V, and $g = g(\Gamma_L, \Gamma_R)$ is the wild monodromy. This leads to the Stokes local system (§8).

The terms *Stokes grading* or *Stokes decomposition* will be used interchangeably. If $d \in \mathbb{A}$ then the fibre V_d can be given the median grading of the fibres to either side (cf. §9), yielding a preferred decomposition of each tangential fibre of V.

The global sections of a Stokes graded local system $\mathcal{V} = (V, \Theta, \Gamma)$ are the sections of the underlying local system V that go into the piece graded by the tame circle $\langle 0 \rangle$ in each singular sector:

$$\mathrm{H}^0(\mathcal{V}, \widehat{\Sigma}) := \{ v \in \mathrm{H}^0(V, \widehat{\Sigma}) \mid v(d) \in \Gamma_d\langle 0 \rangle \text{ for all } d \in \partial \setminus \mathbb{A} \}. \tag{7.2}$$

A morphism $\mathcal{V}_1 \to \mathcal{V}_2$ is a morphism $\varphi : V_1 \to V_2$ of local systems that restricts to a map of $\mathcal{I}_d$-graded vector spaces ($\varphi(\Gamma^1_d(i)) \subset \Gamma^2_d(i)$ for all $i \in \mathcal{I}_d$), for all $d \in \partial \setminus (\mathbb{A}_1 \cup \mathbb{A}_2)$.

The dual Stokes graded local system $\mathcal{V}^\vee$ is defined as $(V^\vee, \Theta^\vee, \Gamma^\vee)$ where

$$\Gamma^\vee_d(q) = \left(\bigoplus_{i \in I_d \setminus \{-q\}} \Gamma_d(i) \right)^\perp \subset V^\vee_d,$$

and the tensor product $\mathcal{V}_1 \otimes \mathcal{V}_2$ is $(V_1 \otimes V_2, \Theta_1 \otimes \Theta_2, \Gamma)$ where

$$\Gamma_d(q) = \bigoplus_{q = q_1 + q_2} \Gamma^1_d(q_1) \otimes \Gamma^2_d(q_2)$$

for generic d (but this is sufficient by robustness). Thus one can define $\mathrm{Hom}(\mathcal{V}_1, \mathcal{V}_2) = \mathcal{V}_2 \otimes \mathcal{V}_1^\vee$ and observe that a morphism $\mathcal{V}_1 \to \mathcal{V}_2$ is the same thing as a global section of this Stokes graded local system.

7.1. Returning to the simple example of §5.6, a Stokes grading of type $I = \langle q_- \rangle \cup \langle q_+ \rangle$ amounts to specifying a direct sum decomposition of V on each sector of $\partial \setminus \mathbb{A}$. Intrinsically the Stokes gradings are indexed by the components of $I \setminus \pi^{-1}(\mathbb{A})$. Thus (away from $\mathbb{S}$) this amounts to choosing two complementary one dimensional subspaces of V, that we call the "subdominant" and "dominant" solutions. In this example the Stokes conditions (3.2) say that at each point $d \in \mathbb{A}$ the lines of "subdominant" solutions on each side match up. Consequently any "dominant" solution may jump at d, by the addition of a "subdominant" solution.

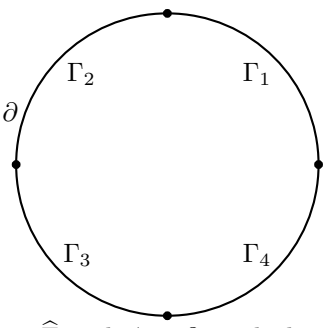

$\widehat{\Sigma}$ with $\mathbb{A} \subset \partial$ marked

8. Stokes local systems

As in §7, recall that an irregular class $\Theta : \mathcal{I} \to \mathbb{N}$ determines the data $n, I, \mathbb{A}, \prec_d$. Also for $d \in \mathbb{A}$ the Stokes arrows $\prec_d$ determine the Stokes group $\mathbb{S}\mathrm{to}_d \subset \mathrm{GL}(V_d^0)$ for any I_d-graded vector space V_d^0, as in (3.3).

Two slightly different definitions of a Stokes local system will be given, the first with explicit gluing maps.

Suppose $V \to \widehat{\Sigma}$ is a rank n local system of complex vector spaces and $V^0 \to \partial$ is an I-graded local system of dimension Θ. Thus on ∂ there are two local systems, V^0 and the restriction of V.

A *gluing map* Φ is an isomorphism of vector spaces $\Phi_d : V_d^0 \cong V_d$ for each $d \in \partial \setminus \mathbb{A}$, which is locally constant as d varies in ∂ without crossing $\mathbb{A}$. Thus it is a section of the local system $\mathrm{Iso}(V^0, V) \subset \mathrm{Hom}(V^0, V)$ over $\partial \setminus \mathbb{A}$.

A gluing map determines an automorphism $\mathbb{S}_d \in \mathrm{GL}(V_d^0)$ for each $d \in \mathbb{A}$, as the composition of the isomorphisms:

$$V_d^0 \xrightarrow{1} V_R^0 \xrightarrow{\Phi_R} V_R \xrightarrow{3} V_L \xrightarrow{\Phi_L^{-1}} V_L^0 \xrightarrow{5} V_d^0 \tag{8.1}$$

where L/R denotes fibres just to the left/right of d, the maps $1, 5$ are the transport of V^0 and 3 is the transport of V. (More precisely L means the positive side of d).

A gluing map is *Stokes* if $\mathbb{S}_d \in \mathbb{S}\mathrm{to}_d$ for all $d \in \mathbb{A}$.

Definition 8.1. A "Stokes local system with gluing maps" is a four-tuple (V, V^0, Θ, Φ) where $V \to \widehat{\Sigma}$ is a local system of vector spaces, Θ is an irregular class (of the same rank as V), $V^0 \to \partial$ is an I-graded local system of dimension Θ, and Φ is a Stokes gluing map.

Note that the gluing map Φ is Stokes if and only if (V, Θ, Γ) is a Stokes graded local system, where Γ is the set of gradings defined by $\Gamma_d(i) = \Phi_d(V_d^0(i))$ for all $i \in I_d, d \in \partial \setminus \mathbb{A}$. This defines a functor to Stokes graded local systems, and it will be seen below that it is an equivalence.

The wild monodromy at $d \in \mathbb{A}$ of a Stokes local system with gluing maps is the automorphism $g_d \in \mathrm{GL}(V_d)$ given by the composition of the isomorphisms:

$$V_d \xrightarrow{1} V_L \xrightarrow{\Phi_L^{-1}} V_L^0 \xrightarrow{3} V_R^0 \xrightarrow{\Phi_R} V_R \xrightarrow{5} V_d \tag{8.2}$$

where L/R denotes fibres just to the left/right of d, the maps $1, 5$ are the transport of V and 3 is the transport of V^0. Clearly g_d is conjugate to $\mathbb{S}_d$, but acts on a different space.

By definition the global sections of $\mathcal{V} = (V, V^0, \Phi, \Theta)$ are pairs (v, v^0) where $v \in \mathrm{H}^0(V, \widehat{\Sigma})$ and $v_0 \in \mathrm{H}^0(V^0\langle 0\rangle, \partial)$, which map to each other under the gluing maps (at each point $d \in \partial \setminus \mathbb{A}$). This is the same as giving just $v \in \mathrm{H}^0(V, \widehat{\Sigma})$ such that $v(d)$ is fixed by g_d for all $d \in \mathbb{A}$, and $\Phi_d^{-1}(v(d)) \in V_d^0\langle 0\rangle$ for all $d \in \partial \setminus \mathbb{A}$. However it follows from Lemma 3.3 that the first condition is redundant and so

$$\mathrm{H}^0(\mathcal{V}, \widehat{\Sigma}) = \{v \in \mathrm{H}^0(V, \widehat{\Sigma}) \mid v(d) \in \Phi_d(V_d^0\langle 0\rangle) \text{ for all } d \in \partial \setminus \mathbb{A}\}. \tag{8.3}$$

To motivate the second approach, note that the graded local system $V^0 \to \partial$ is the same as giving a graded local system on each halo (a germ of a punctured disk around each puncture). Thus there are two local systems on each halo: V^0 and the restriction of V. The gluing maps glue them together, away from each singular direction. One can picture this by putting V^0 on a second copy of the halo, above the first one (with V on it), and then gluing the two copies, away from the singular directions (leading to a small tunnel over each singular direction). The

second version appears by removing the base of each tunnel, and then pushing this picture flat (yielding a surface with tangential punctures).

Said differently for the second version just restrict V to the complement of the halos, so the gluing maps amount to a way to glue V^0 to V across each component of the outer boundary of each halo, away from the singular directions. This is the most convenient description in practice. It leads to the idea of *fission* [**15**], that the structure group is broken (to the group of graded automorphisms) at the boundary of $\widehat{\Sigma}$, as illustrated in the picture on the title page. (Here the I-graded local system is identified with a local system on $I \to \mathbb{H}$ in the usual way, and the cover I is glued to the interior of the curve—in other words a Stokes local system is thus the same as a sort of generalised local system on the surface in the picture, where the ranks jump as the surface bifurcates. The tangential punctures are not drawn but should be there).

Define the halos $\mathbb{H} \subset \widehat{\Sigma}$ as a small tubular neighbourhood of ∂, so $\mathbb{H}$ is a union of annuli. Let ∂' be the boundary of $\mathbb{H}$ in the interior of $\widehat{\Sigma}$. The cover $I \to \partial$ extends to a cover $I \to \mathbb{H}$. Choose a smooth bijection $e : \partial \to \partial'$ preserving the order of the points. Thus if the irregular class Θ and thus $\mathbb{A} \subset \partial$ is given, then the auxiliary surface:

$$\widetilde{\Sigma} = \widetilde{\Sigma}(\Theta) := \widehat{\Sigma} \setminus e(\mathbb{A})$$

is well defined, removing the tangential punctures $e(d)$ from $\widehat{\Sigma}$ for $d \in \mathbb{A}$. If $d \in \mathbb{A}$ let γ_d be the small positive loop in $\widetilde{\Sigma}$ based at d that goes across $\mathbb{H}$, around $e(d)$ and back to d.

Definition 8.2. A Stokes local system is a pair $(\mathbb{V}, \Theta)$ where Θ is an irregular class and $\mathbb{V}$ is a local system of vector spaces on $\widetilde{\Sigma}(\Theta)$, equipped with an I-grading over $\mathbb{H}$ (of dimension Θ), such that the monodromy $\mathbb{S}_d := \rho(\gamma_d)$ is in $\mathbb{S}\mathrm{to}_d \subset \mathrm{GL}(\mathbb{V}_d)$ for each $d \in \mathbb{A}$.

The element $\mathbb{S}_d = \rho(\gamma_d) \in \mathbb{S}\mathrm{to}_d \subset \mathrm{GL}(\mathbb{V}_d)$ is the Stokes automorphism. The equivalence of the two approaches is straightforward, whence $\mathbb{S}_d$ is identified with that defined in (8.1). This is the specialisation to general linear groups of the definition in [**18**, **25**].

Note that an I-graded local system of dimension Θ is the same thing as an $\mathcal{I}$-graded local system of dimension Θ (all the other components of $\mathcal{I}$ grade the trivial rank zero sublocal system).

If $\mathcal{V} = (\mathbb{V}, \Theta)$ is a Stokes local system then a section of $\mathcal{V}$ is a section of $\mathbb{V}$ that takes values in $\mathbb{V}\langle 0\rangle$ over each halo (the graded piece indexed by the tame circle).

A morphism of Stokes local systems $\mathcal{V}_1 \to \mathcal{V}_2$ is a map of local systems on $\widetilde{\Sigma}(\Theta_1) \cap \widetilde{\Sigma}(\Theta_2)$ that restricts to a map of $\mathcal{I}$-graded local systems over $\mathbb{H}$. In particular two Stokes local systems are isomorphic if and only if their irregular classes are equal and their underlying local systems $\mathbb{V}_1, \mathbb{V}_2$ are isomorphic.

Note on terminology: The "wild monodromy" and "Stokes automorphism" are essentially the same thing—namely the monodromy of the Stokes local system around a small positive loop around a tangential puncture. In this paper the term "Stokes automorphism" will be used if the loop is based in the halo, and the term "wild monodromy" will be used if the loop is based outside the halo (in the interior of the curve). For example $g_d \in \mathrm{GL}(V_d)$ and $\mathbb{S}_d \in \mathrm{GL}(V_d^0)$. Note however that these *equal* if one starts with a Stokes graded local system (see Lemma 9.1).

8.1. Returning to the simple example of §5.6, a Stokes local system of type $I = \langle q_- \rangle \cup \langle q_+ \rangle$ is a local system $\mathbb{V}$ on the auxiliary surface $\widetilde{\Sigma}$, graded by I over the halo (the shaded area in the figure). Given $d \in \mathbb{A}$ the fibre $\mathbb{V}_d$ is graded by I_d and so the Stokes arrow between the two points of I_d determines the Stokes group $\left(\begin{smallmatrix} 1 & * \\ 0 & 1 \end{smallmatrix}\right) \subset \mathrm{GL}(\mathbb{V}_d)$, where the star corresponds to maps along the arrow. The monodromy of $\mathbb{V}$ around a small loop (based at d) around the tangential puncture $e(d)$, should be in this Stokes group. Choosing a basepoint $b \in \partial$ and suitable loops in $\widetilde{\Sigma}$ based at b then yields the formal monodromy $h \in \mathrm{GrAut}(\mathbb{V}_b)$ (the monodromy of $\mathbb{V}$ around ∂) and Stokes automorphisms S_1, S_2, S_3, S_4 (in alternating unipotent groups) satisfying the monodromy relation $hS_4S_3S_2S_1 = 1$.

Remark 8.3. Here are more details on how to see the two versions are equivalent. Choose a retraction of $\mathbb{H} \cong [0,1] \times \partial$ onto ∂ (dragging $e(d)$ along a path λ_d to d). Consider the intermediate category of four-tuples (V, V^0, Φ, Θ) where V^0 is now defined on all of $\mathbb{H}$, and the gluing maps are defined on all of $\mathbb{H}$ except on the paths (cilia) λ_d for $d \in \mathbb{A}$. Such objects restrict to give a Stokes local system with gluing maps in the obvious way, yielding an equivalence. On the other hand the restriction of V to the complement of $\mathbb{H}$ really does now glue to V^0 on $\partial' \setminus e(\mathbb{A})$, defining a Stokes local system $\mathbb{V}$, yielding an equivalence.

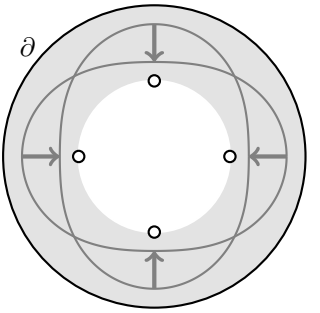

$\widetilde{\Sigma}$ with Stokes diagram and Stokes arrows drawn

Remark 8.4. 1) An alternative version (cf. [**19**] Apx. B) is to glue the halo $\mathbb{H} = \partial \times [0,1]$ on the *other side* of ∂, and then the tangential punctures are made at $\mathbb{A} \subset \partial$. This is homotopy equivalent to the presentation above. In practice it is not important exactly where the tangential punctures are, provided they are in the right order (cf. also the version in [**18**] with non-crossing cilia drawn to keep them in order, which can be pulled tight whenever convenient—this perhaps best reflects the desired picture especially when the curve etc moves).

2) Perhaps the simplest approach is to just glue a second copy of ∂ onto ∂ away from the singular directions $\mathbb{A} \subset \partial$. One can prove the resulting (non-Hausdorff) space has the desired fundamental group [**38**], and then view $\mathbb{V}$ as a local system on it.

9. Stokes local systems and Stokes graded local systems

A Stokes local system with gluing maps (V, V^0, Φ, Θ) determines a Stokes grading Γ, by taking the image of the graded local system under the gluing maps:

$$\Gamma_d(i) = \Phi_d(V_d^0(i))$$

for all $d \in \partial \setminus \mathbb{A}, i \in I_d$. Conversely given a Stokes graded local system (V, Θ, Γ) it is easy to construct a Stokes local system (with gluing maps) mapping to it as above: If $d \in \mathbb{A}$ then transport the gradings on either side of d to V_d and define Γ_d to be the median grading (of V_d) determined by these gradings from either side, as in §3.5. Then, for any $d \in \partial$, define V_d^0 to be the graded vector space (V_d, Γ_d). The

spaces V_d^0 form the fibres of a graded local system $V^0 \to \partial$: for any path in $\partial \setminus \mathbb{A}$ this is clear. On the other hand for a small path across some $d \in \mathbb{A}$ use the "wild transport" (7.1). Similarly for a path ending at $d \in \mathbb{A}$, for example:

$$(V_L, \Gamma_L) \;\cong\; (V_d, \Gamma_L) \overset{g(\Gamma_L,\Gamma_d)}{\longrightarrow} (V_d, \Gamma_d).$$

This defines the graded local system V^0, and by construction it comes with gluing maps (the identity) $\Phi_d : V_d^0 \to V_d$ for all $d \in \partial \setminus \mathbb{A}$.

To show this is an equivalence of categories it remains to check fully faithfulness, which is left as an exercise. (Using the internal hom it is enough to show the map between spaces of global sections is bijective, and this is immediate, comparing (7.2) and (8.3).)

LEMMA 9.1. *Suppose* (V, V^0, Φ, Θ) *is the Stokes local system with gluing maps of a Stokes graded local system* (V, Γ, Θ) *as constructed above. Then the wild monodromy equals the Stokes automorphism as an element of* $\mathrm{GL}(V_d)$ *for any* $d \in \mathbb{A}$.

Proof. Recall that V_d^0 is the space V_d equipped with the median grading Γ_d, so the statement makes sense. There are three gradings $\Gamma_L, \Gamma_R, \Gamma_d$ in V_d. Then $g_d = g(\Gamma_L, \Gamma_R)$, and the definition of $\mathbb{S}_d$ says that $\mathbb{S}_d = g(\Gamma_L, \Gamma_d) \circ g(\Gamma_d, \Gamma_R) = (\sqrt{g_d})^2 = g_d$. □

10. Operations on Stokes filtered local systems

10.1. Intermediate filtrations. Suppose (V, Θ, F) is a Stokes filtered local system indexed by I. If $d \in \partial$ is a Stokes direction for I then the dominance ordering of I_d is only a partial order. Nonetheless for each $i \in I_d$ a subspace $F_d(i) \subset V_d$ can be defined as follows. Let $F_L(i), F_R(i)$ be the corresponding steps of the Stokes filtrations, just on the left and right of d respectively. Transport them to d (using the local system structure of V), to obtain subspaces $F_{L/R}(i) \subset V_d$, and define the *intermediate filtration*:

$$F_d(i) := F_L(i) \cap F_R(i). \tag{10.1}$$

These subspaces have the property that if $i <_d j$ then $F_d(i) \subset F_d(j)$. Note that the partial order $<_d$ is the intersection of the adjacent orders on either side of d.

LEMMA 10.1. *If* $d \in \mathbb{S}, i \in I_d$ *and* Γ *is any local splitting of* F *across* d*, then* $F_d(i)$ *equals the filtration associated to the grading* Γ *by the partial order* $<_d$*:*

$$F_d(i) = \mathcal{F}(\Gamma, <_d)(i) := \Gamma_d(i) \oplus \bigoplus_{j <_d i} \Gamma_d(j).$$

Proof. Fix $d \in \mathbb{S}$ and $i \in I_d$. Then i determines a partition of I_d into five subsets:

$$I_d = I_{++} \sqcup I_{--} \sqcup I_{-+} \sqcup I_{+-} \sqcup I_{=},$$

where $I_{=} = \{i\}$ and for example I_{+-} is the subset of elements of I_d that are greater than i on the left and less than i on the right of d. Thus the choice of any local splitting determines a decomposition $V_d = V_{++} \oplus V_{--} \oplus V_{-+} \oplus V_{+-} \oplus V_{=}$ (summing over the corresponding indices). By construction $F_L = V_{--} \oplus V_{-+} \oplus V_{=}$, $F_R = V_{--} \oplus V_{+-} \oplus V_{=}$ and $F_d(i) = V_{--} \oplus V_{=}$, so the claim follows: $F_d(i) = F_L(i) \cap F_R(i)$. □

Thus one can just as well incorporate the data of the filtration of every fibre V_d (not just away from the Stokes directions) in this slightly generalised sense (since I_d is only partially ordered, they are not quite filtrations in the usual sense). As shown above this "extra data" is canonically determined by the Stokes filtration.

10.2. Associated graded local system. Suppose (V, Θ, F) is a Stokes filtered local system with active exponents I. For each $d \in \partial$ one can consider the associated graded vector space $\mathrm{Gr}(V_d, F_d)$. Even though the filtrations will in general jump discontinuously at Stokes directions, these graded vector spaces fit together in a canonical way as the fibres of a graded local system:

LEMMA 10.2. *Given a Stokes filtration F on a local system $V \to \partial$ indexed by $I \subset \mathcal{I}$, then there is a canonically determined I-graded local system,* $\mathrm{Gr}(V, F) \to \partial$, *the associated graded, with fibres the associated graded vector spaces* $\mathrm{Gr}(V_d, F_d)$.

Proof. Away from Stokes directions this is immediate since the Stokes filtrations are locally constant. Suppose d is a Stokes direction. In the notation of the proof of Lemma 10.1 the piece of $\mathrm{Gr}(V_d, F_d)$ with index $i \in I_d$ is $F_d(i)/F_d(<i)$ at d, and on the left the corresponding graded piece is $F_L(i)/F_L(<i)$. Given a local grading then $F_d(<i) = V_{--}$ and $F_L(<i) = V_{--} \oplus V_{-+}$. It follows that the natural inclusion map $F_d(i) = F_L(i) \cap F_R(i) \hookrightarrow F_L(i)$ maps $F_d(<i)$ into $F_L(<i)$, and induces an isomorphism $F_d(i)/F_d(<i) \cong F_L(i)/F_L(<i)$ on the quotients. Similarly going to the right of d. This provides the gluing maps to define the graded local system. □

In the simple example of §§5.6,6.1, the associated graded $V^0 = \mathrm{Gr}(V, F) \to \partial$ is isomorphic to the local system whose solutions are the two functions $f_\pm = \exp(q_\pm)x^{\pm\lambda-1/2}$ appearing in the formal solutions at ∞. The monodromy of V^0 (the formal monodromy) is thus $-(\mathrm{diag}(t, t^{-1}))$ where $t = \exp(2\pi i\lambda)$. A nice exercise shows this amounts to taking the cross-ratio of the four lines $L_1, \ldots, L_4 \subset \mathbb{C}^2$ (see [**23**] Lem. 11).

11. Stokes filtrations from Stokes gradings

A Stokes graded local system (V, Θ, Γ) determines a Stokes filtered local system (V, Θ, F) by taking the associated filtrations, using the dominance orderings. In detail this goes as follows. For any $d \in \partial \setminus \mathbb{S}$ we need to define an I_d-filtration F_d of V_d. There are two cases:

1) If $d \notin \mathbb{A}$ then $F_d = \mathcal{F}(\Gamma, <_d)$ is the filtration associated to the grading using the dominance ordering of I_d.

2) If $d \in \mathbb{A}$ then transport the two gradings on either side, to V_d and then take their associated filtrations. The Stokes condition ensures these two filtrations are equal, since the order $<_d$ extends the partial order $\prec_d$, by Lemma 5.1.

To show this is a Stokes filtration first note that Lemma 5.1 implies the following:

COROLLARY 11.1 (Malleability). *Suppose $(V, \Theta, \Gamma) \to \partial$ is a Stokes graded local system and $d \in \mathbb{A} \cap \mathbb{S}$. Let Γ_L, Γ_R be the gradings just to the left and right of d and let F_L, F_R be the corresponding associated filtrations. Transport all this to V_d. Then both gradings split both filtrations.*

Proof. By Lem. 5.1 the orders $<_L, <_R$ from either side extend the partial order $\prec_d$. Thus the result follows immediately from the Stokes conditions at d for Γ_L, Γ_R.

□

LEMMA 11.2. *(V, Θ, F) is a Stokes filtered local system.*

Proof. For any $d \in \mathbb{S}$ we need to check the two filtrations on either side of d satisfy the Stokes condition. Firstly if $d \notin \mathbb{A}$ then this is clear, since then Γ_d gives the desired splitting. Secondly if $d \in \mathbb{A}$, then the transport of the grading on either side will split both filtrations, by Corollary 11.1. □

This defines a functor φ from Stokes graded local systems to Stokes filtered local systems. It is fully faithful and surjective so is an equivalence of categories (it is surjective and not just essentially surjective). Surjectivity follows from the main theorem:

THEOREM 11.3. *Any Stokes filtered local system (V, Θ, F) admits a unique Stokes grading Γ, such that F is the Stokes filtration associated to Γ:*

$$(V, \Theta, F) = \varphi(V, \Theta, \Gamma).$$

This will be proved in the next section, and fully faithfulness in §12.4.

REMARK 11.4. Note that a Stokes graded local system thus determines a graded local system in two ways: as the associated graded of the associated filtrations, or via the converse construction in §9. The fact they are canonically isomorphic is left as an exercise.

11.1. In the simple example of §§5.6,6.1,7.1, Thm. 11.3 holds since the Stokes gradings are then given by the two adjacent subdominant solutions: $\Gamma_i = L_{i-1} \oplus L_i$ (indices modulo 4). Indeed, the fact the Stokes gradings split the Stokes filtrations implies the "subdominant" line in each Stokes grading equals the subdominant line in the Stokes filtration. Then the fact the Stokes gradings are continuous across each oscillating direction $\mathbb{S} \subset \partial$ implies the "dominant" lines in each Stokes grading are also determined. The general case is trickier.

12. Canonical splittings

For the existence of such splittings, the approach here fleshes out a sketch of Malgrange [**32**] p.73, composing one level splittings (this statement can be obtained in several other ways, e.g. via multisummation). This is then upgraded to give the uniqueness statement in Thm. 1.1 too, which looks to be new. The idea of decomposing by the levels reflects the Gevrey asymptotics [**49**, **50**], and was previously used in the algebraic construction of the general (multi-level) wild character varieties [**18**, **25**], nesting the one-level fission spaces.

12.1. Facts about Stokes groups etc. This section collects some facts about Stokes groups and their relation to splittings and the splitting groups Λ_d. Similar statements are in [**6**], [**47**] p.362, [**42**] (some terminology comes from the G version in [**12**, **18**]).

Let (V, Θ, F) be a Stokes filtered local system with active exponents $I \to \partial$. Let $V^0 = \mathrm{Gr}(V, F) \to \partial$ be the associated I-graded local system.

Let $\mathbb{S}\mathrm{to}_d \subset \mathrm{GL}(V_d^0)$ be the Stokes group, determined by the Stokes arrows $\prec_d$ as in (3.3). It is trivial unless $d \in \mathbb{A}$.

Similarly define the splitting group $\Lambda_d \subset \mathrm{GL}(V_d^0)$ to be the unipotent group with Lie algebra determined by the dominance (partial) order $<_d$. This is maximal if $d \notin \mathbb{S}$, and if $d \in \mathbb{S}$ it is the intersection of the two adjacent (maximal) groups. The set $\mathrm{Splits}_d \subset \mathrm{Iso}(V_d^0, V_d)$ of splittings of (V_d, F_d) is a torsor for Λ_d.

More generally for $\alpha, \beta \in \mathbb{R}_{>0}$ let $\mathrm{Splits}_d(-\alpha, \beta) \subset \mathrm{Splits}_d$ be the (possibly empty) set of gradings that split the Stokes filtrations throughout $\mathrm{Sect}_d(-\alpha, \beta)$ (recalling the conventions from §4.4 for ramified intervals). If nonempty, this is a torsor for the group $\Lambda_d(-\alpha, \beta) \subset \Lambda_d$ (defined by transporting to d all the splitting groups over $\mathrm{Sect}_d(-\alpha, \beta)$ and then intersecting them). Similarly for closed/half-closed intervals etc (if a closed interval ends on a Stokes direction then the intermediate filtration there is included).

Now suppose I just has one level k. Then $\mathbb{S} = \mathbb{A} + \pi/2k = \mathbb{S} + \pi/k$, and this leads to a clear dictionary between the Stokes groups and the splitting groups, as follows. All this follows directly from the definitions of $\mathbb{S}\mathrm{to}_d$ and Λ.

First some basic terminology: 1) a singular sector $U \subset \partial$ is an open interval bounded by consecutive singular directions, 2) a half-period $\mathbf{d}$ is a sequence of consecutive singular directions turning in a positive sense, consisting of the singular directions under some (possibly ramified) sector of the form $\mathrm{Sect}_d[0, \pi/k)$, 3) the supersector $\widehat{U}$ of any singular sector U is the sector $\widehat{U} = \mathrm{Sect}_U(-\pi/2k, \pi/2k)$ (recalling (4.1)). Note $\widehat{U}$ is bounded by Stokes directions and that the underlying singular directions make up a half-period. 4) If $\mathbf{d} = (d_1, \ldots, d_l)$ is a half-period, let $d_0 = d_l - \pi/k \in \mathbb{A}$ and let $\theta(\mathbf{d}) := (d_0 + d_1)/2 + \pi/2k$ be the bisecting direction of $\mathbf{d}$ (it is not a Stokes direction).

The "restrictions" of I, V, V^0 to $\mathrm{Sect}_d(-\alpha, \alpha)$ (as in 3 of §4.4) are trivial so it makes sense to compare the partial orders $\prec_d, <_d$ (and thus the Stokes groups and the splitting groups) defined at different points in such ramified sectors (using the transport in the sector).

The key fact is that $\prec_d$ is extended by $<_e$ if $e \in \mathrm{Sect}_d(-\pi/2k, \pi/2k)$. This implies

$$\mathbb{S}\mathrm{to}_d \subset \Lambda_e \qquad \text{for all } e \in \mathrm{Sect}_d(-\pi/2k, \pi/2k).$$

Moreover any relation $i <_d j$ corresponds uniquely to a relation $i \prec_e j$ for a unique $e \in \mathrm{Sect}_d(-\pi/2k, \pi/2k)$. This implies, for any $d \in \partial$, that Λ_d is directly spanned by the Stokes groups $\mathbb{S}\mathrm{to}_e$ for $e \in \mathrm{Sect}_d(-\pi/2k, \pi/2k)$:

$$\Lambda_d = \left\langle \mathbb{S}\mathrm{to}_e \;\middle|\; e \in \mathrm{Sect}_d(-\pi/2k, \pi/2k) \right\rangle^{\oplus}.$$

Recall ([**26**] §14) that a group is "directly spanned" by a collection of subgroups if the product map (in any fixed order) is an isomorphism (of spaces not necessarily of groups). For example the Stokes groups in any half-period $\mathbf{d}$ directly span a full unipotent group (the unipotent radical of a parabolic) $\mathbb{S}\mathrm{to}_{\mathbf{d}} := \left\langle \mathbb{S}\mathrm{to}_d \;\middle|\; d \in \mathbf{d} \right\rangle^{\oplus} \subset \mathrm{GL}(V^0_{\theta(\mathbf{d})})$. It follows that $\Lambda_{\theta(\mathbf{d})} = \mathbb{S}\mathrm{to}_{\mathbf{d}}$.

More generally if $\alpha + \beta < \pi/k$ then $\Lambda_d[-\alpha, \beta]$ is directly spanned by the Stokes groups in $\mathrm{Sect}_d(\beta - \pi/2k, \pi/2k - \alpha)$:

$$\Lambda_d[-\alpha, \beta] = \bigcap_{e \in \mathrm{Sect}_d[-\alpha, \beta]} \Lambda_e = \left\langle \mathbb{S}\mathrm{to}_f \;\middle|\; f \in \mathrm{Sect}_d(\beta - \pi/2k, \pi/2k - \alpha) \right\rangle^{\oplus}. \tag{12.1}$$

Conversely if $d \in \mathbb{A}$ let $\mathbf{d}^+$ denote the half-period of singular directions in $\mathrm{Sect}_d[0, \pi/k)$ and let $\mathbf{d}^-$ be the half-period of singular directions in $\mathrm{Sect}_d(-\pi/k, 0]$

(the two half-periods ending on d). Then

$$\mathbb{S}\mathrm{to}_d = \mathbb{S}\mathrm{to}_{\mathbf{d}^-} \cap \mathbb{S}\mathrm{to}_{\mathbf{d}^+} = \Lambda_d(-\pi/2k, \pi/2k). \tag{12.2}$$

12.2. Preferred splittings in the one level case. If $d \notin \mathbb{A}$ then (12.2) still holds, and now says that $\Lambda_d(-\pi/2k, \pi/2k) = \{1\}$. If U is the singular sector containing d this is the same as saying $\Lambda_d(\widehat{U}) = \{1\}$, where $\widehat{U}$ is the supersector. Note that $d \pm \pi/2k$ are not Stokes directions—since they differ by π/k their (total) dominance orderings are *opposite*, and this is the reason the splitting group is trivial. This implies there is at most one splitting on $\widehat{U}$. A key point is that there is exactly one:

PROPOSITION 12.1. *If (V, Θ, F) has just one level k and $U \subset \partial$ is a singular sector then there is a unique splitting on the supersector $\widehat{U} = \mathrm{Sect}_U(-\pi/2k, \pi/2k)$. Equivalently if $d \in \partial \setminus \mathbb{A}$ then $\mathrm{Splits}_d(-\pi/2k, \pi/2k)$ consists of exactly one point.*

Proof. A direct proof is in [**44**] Lemme 5.1 (see also [**5**]). The result also follows for general reasons: From the opposite filtrations at $d \pm \pi/2k$ it is easy to see what the grading must be. Then one needs to check this grading splits the intermediate filtrations. However the Bruhat decomposition implies the intermediate filtrations are uniquely determined by the filtrations at the ends (since the permutations at the Stokes directions give a length preserving decomposition of the order reversing permutation), cf. e.g. [**31**] p.106 (a_2). □

Thus given a singular sector U there is a unique splitting on $\widehat{U}$. Let $\Phi_U \in \mathrm{Splits}(U)$ be the restriction of this splitting to U. These yield a Stokes grading, and it is unique:

PROPOSITION 12.2. *Suppose (V, Θ, F) is a Stokes filtered local system indexed by I, and I has just one level. Then there is unique Stokes graded local system (V, Θ, Γ) that is compatible with F.*

Proof. Let k denote the level, and let $V^0 \to \partial$ be the associated graded. For each singular sector U let $\Phi_U \in \mathrm{Splits}(U) \subset \mathrm{Iso}_U(V^0, V)$ be the preferred splitting, from Prop. 12.1. To check that the Stokes conditions hold, note that if $d \in \mathbb{A}$ and U_1, U_2 are the adjacent singular sectors then $\widehat{U}_1 \cap \widehat{U}_2 = \mathrm{Sect}_d(-\pi/2k, \pi/2k)$. Thus both splittings work on this intersection so they are related by an element of the splitting group $\Lambda_d(-\pi/2k, \pi/2k)$. By (12.2) this group equals $\mathbb{S}\mathrm{to}_d$, so the Stokes conditions hold.

Now to prove uniqueness, let U_0 be a singular sector and let $U_1, U_2, \ldots, U_{m-1} = U_{-1}$ be the others, in a positive sense (indices modulo m). Let d_i be the negative edge of U_i so $U_i = \mathrm{Sect}(d_i, d_{i+1})$. Suppose Φ_i is a splitting on U_i for each i, and they satisfy the Stokes conditions. We will show that Φ_0 extends to a splitting on all of $\widehat{U}_0$, so Φ_0 is the restriction of the unique splitting there.

Write $d = d_0, e = d_1$ so $U_0 = \mathrm{Sect}(d, e)$ and $\widehat{U}_0 = \mathrm{Sect}(d - \pi/2k, e + \pi/2k)$. Let $\tau_1, \ldots, \tau_r = e + \pi/2k$ be the Stokes directions in $[e, e + \pi/2k]$, turning in a positive sense from U_0. It follows that $\tau_{r-1} = d + \pi/2k$. We will show inductively that Φ_0 extends to a splitting on (d, τ_j) for $j = 1, \ldots, r$. If $j = 1$ then there is nothing to do (since splittings always extend up to the next Stokes direction). Now assume Φ_0 extends to a splitting on (d, τ_j) for some $j < r$. The aim is to show Φ_0 extends across τ_j to a splitting on (d, τ_{j+1}). Observe the following:

1) there is a splitting on (d, τ_{j+1}) (e.g. the unique splitting on $\widehat{U}_0$).

2) there is some index $d_i \in [0, \tau_j)$ such that Φ_i is a splitting in some (small) neighbourhood of τ_j (by Cor. 11.1, since τ_j will be in the closure of some U_i). Let $\mathbf{d}^+$ be the set of singular directions in the sector $[e, \tau_{r-1})$, so $d_i \in \mathbf{d}^+$ and let $\mathbb{S}\mathrm{to}^+ = \langle \mathbb{S}\mathrm{to}_f \mid f \in \mathbf{d}^+ \rangle^{\oplus}$. By hypothesis $\Phi_i = \Phi_0 S$ for some $S \in \mathbb{S}\mathrm{to}^+$.

3) by definition $\mathbf{d}^+ \subset (d, \tau_{r-1}) = (d, d + \pi/2k)$ so that (12.1) implies

$$\mathbb{S}\mathrm{to}^+ \subset \Lambda[d, d + \pi/2k] = \Lambda[d, \tau_{r-1}] = \Lambda[d, \tau_r)$$

where the last equality follows since Λ only changes at Stokes directions. In particular since $\Lambda[d, \tau_r) \subset \Lambda[d, \tau_j)$ this implies that $\Phi_0 S$ is a splitting on (d, τ_j) (since Φ_0 is), and so $\Phi_0 S$ is in fact a splitting on all of (d, τ_{j+1}) (as it equals the splitting Φ_i across τ_j). Thus since $S \in \Lambda[d, \tau_r) \subset \Lambda(d, \tau_{j+1})$ it follows that Φ_0 itself is a splitting on (d, τ_{j+1}), completing the inductive step.

Thus, by induction, Φ_0 is a splitting on (d, τ_r). Similarly going in the negative direction, Φ_0 is a splitting on all of $\widehat{U}_0$, and so equals the unique splitting there. Repeating on each singular sector yields the desired uniqueness statement. □

12.3. Preparation for the induction. In order to get the proof to work cleanly a slightly more general context is needed, which will now be made explicit so as to clarify the logic.

Natural quotients. If k is a positive rational number, let $\mathcal{I}^k \subset \mathcal{I}$ be the sublocal system of exponents of slope $\leq k$, and let $\mathcal{I}(k) = \mathcal{I}/\mathcal{I}^k$ be the quotient local system. Thus sections of $\mathcal{I}(k)$ can be represented by functions that can be expressed as finite sums of the form $q = \sum a_i x^{l_i}$ for rational numbers $l_i > k$ (where $x = z^{-1}$ for a local coordinate z). In turn if $I \to \partial$ is a finite subcover, let

$$J = I(k) = I/\mathcal{I}^k.$$

This means that two local sections of I are identified if their difference has slope $\leq k$. Note that the maps $I \twoheadrightarrow J$ and $J \to \partial$ are both finite covering maps, so there is a factorisation

$$I \twoheadrightarrow J \twoheadrightarrow \partial$$

of the cover $I \to \partial$. Such covers $J = I(k) \to \partial$ will be called "natural quotients". If $l > k$ one can repeat and define $K = J(l) = J/\mathcal{I}^l = I(l)$, so that

$$I \twoheadrightarrow J \twoheadrightarrow K \twoheadrightarrow \partial.$$

Partitions of the fibres. Given a nested cover $\pi : I \twoheadrightarrow J \twoheadrightarrow \partial$ (as above) then I can be viewed as "graded" or partitioned by J. Namely each fibre I_d of I is partitioned into "parts" $\pi^{-1}(j)$, indexed by $j \in J_d$ (for any $d \in \partial$).

Canonical factorisation and fission tree. Thus for any natural quotient $\pi : I \to \partial$ (such that π is not an isomorphism) there is a minimal rational number $k \in \mathbb{Q}$ such that the map $I \twoheadrightarrow I(k)$ is not an isomorphism. Iterating, it follows that any finite subcover $I \to \partial$ has a canonical factorisation

$$I \twoheadrightarrow I(k_1) \twoheadrightarrow I(k_2) \twoheadrightarrow \cdots \twoheadrightarrow I(k_{r-1}) \twoheadrightarrow I(k_r) \xrightarrow{\cong} \partial \tag{12.3}$$

where each k_i is minimal so that the map $I(k_{i-1}) \twoheadrightarrow I(k_i)$ is not an isomorphism. The numbers $k_1 < k_2 \cdots < k_r$ are the levels (i.e. the adjoint slopes) of I. In particular the sequence of degrees of the covers $I(k_i) \to \partial$ is strictly decreasing. Sometimes this nested sequence of covers (12.3) will be called the "three-dimensional fission tree" of I. (It is a quite remarkable topological object canonically associated to any algebraic connection.) If I is unramified then each map $I(k) \to \partial$ is a trivial finite

cover, and then the three-dimensional fission tree is just the product of the circle ∂ with the (two-dimensional) fission tree attached to I (the rooted tree described in [**14**] Apx. C). Indeed if we quotient by the action rotating the circle a tree becomes visible: if a coordinate is chosen, I/∂ can be identified with a finite subset $\{q_1, \ldots, q_n\}$ of $x\mathbb{C}[x]$ (or more precisely as a multiset). In turn $(I(k)/\partial) \subset x\mathbb{C}[x]$ can be defined by deleting all monomials of each q_i of degree $\leq k$, yielding the map $I(k) \twoheadrightarrow I(l)$ for any $l > k$. Thus the quotient of (12.3) by the circle is visibly a tree with leaves I/∂ and root $I(k_r)/\partial = \{*\}$:

$$I/\partial \twoheadrightarrow I(k_1)/\partial \twoheadrightarrow \cdots \twoheadrightarrow I(k_r)/\partial = \{*\}. \tag{12.4}$$

The picture on the title page corresponds to a simple twisted case (related to the irregular class $\langle x^{5/2} \rangle$ at ∞ of the linear equation whose isomonodromic deformations yield the first Painlevé equation). The reader is invited to draw (or at least imagine) the analogous picture in a case with several levels (iterated fission).

Data attached to natural quotients. Natural quotients $J = I(k)$ behave just like finite subcovers of $\mathcal{I}$. In particular the dominance ordering descends to the fibres of J in the obvious way and then Stokes directions, singular directions, levels, Stokes arrows etc of $J \to \partial$ are well-defined. In turn the notion of "Stokes filtered local system indexed by J" is well-defined. Indeed we could choose a component of $\mathcal{I}$ in each equivalence class so as to get an embedding $J \hookrightarrow \mathcal{I}$, and thus identify J itself as a finite subcover (for example by forgetting all the terms of order $\leq k$ with respect to some coordinate). Then all the data attached to J is the same as that which arises by viewing J as a finite subcover (independent of the choice of embedding). In this way the notion of a natural quotient is a mild generalisation of a finite subcover of $\mathcal{I}$ (since we don't want to choose such an embedding), and we don't need to worry about the fact that J is not canonically a finite subcover of $\mathcal{I}$.

Partially graded Stokes filtered local systems. Suppose $V \to \partial$ is a J-graded local system. Then the dominance ordering determined by J determines the associated filtration, yielding a Stokes filtered local system $(V, \mathcal{F}(V))$ indexed by J. This will be called the tautological Stokes filtration.

Now suppose $\pi : I \to J$ is a natural quotient. A "Stokes filtered local system indexed by $I \to J$" is a pair (V, F) where V is a J-graded local system and (V, F) is a Stokes filtered local system indexed by I, and they are compatible in the sense that each I-filtration F_d refines the J-filtration $\mathcal{F}(V)_d$. In particular each local I-grading $\bigoplus_{I_d} V_d(i)$ (in the definition of (V, F)), is a refinement of the J-grading:

$$V_d(j) = \bigoplus_{i \in \pi^{-1}(j)} V_d(i)$$

for all $j \in J_d$. For clarity this will sometimes be called a "partially graded Stokes filtered local system". For example if $J = \partial$ then this is just a Stokes filtered local system indexed by I. At the other extreme, if $I = J$ it is just an I-graded local system (with its tautological Stokes filtration). Some natural examples will appear in the next subsection.

Since the exponents in different graded pieces do not interact it is natural to define the "levels of $I \to J$" to be the slopes of local sections $q_i - q_j$ where i, j are in the same part of I. This means that the levels of $I \to I(k)$ are the levels of I that are $\leq k$. Thus in the factorisation (12.3) each map $I(k_i) \to I(k_{i+1})$ just has one level, equal to k_i (including $I \to I(k_1)$). In turn the Stokes directions, singular directions, Stokes arrows etc of $I \to J$ are well-defined. For example the Stokes

arrows $I \to J$ are the subset of $I \times I$ given by the pairs (q_i, q_j) where i, j are in the same part of I_d and d is a point of maximal decay for $q_i - q_j$. The corresponding singular directions are denoted $\mathbb{A}(I \to J)$.

Similarly a "Stokes graded local system (V, Γ) indexed by $I \to J$", consists of a J-graded local system V, plus an I-grading Γ_d of V_d that refines the J grading, for each $d \in \partial \setminus \mathbb{A}(I \to J)$, and satisfies the Stokes conditions.

If $I \to J$ just has one level and (V, F) is indexed by $I \to J$ then Prop. 12.2 cannot be applied blindly to see there is a unique compatible Stokes grading, since 1) J may have monodromy, and 2) the dominance orders of I_d are not necessarily opposite at the ends of a supersector (but they are in each part). However it is clear preferred gradings exist: given a singular sector U, consider one sheet of J on U and the corresponding part of I—upon restriction to the supersector $\widehat{U}$, Prop. 12.1 can then be applied to give a unique splitting. Then repeat for each sheet of J. Then the proof of Prop. 12.2 works verbatim to show this gives a Stokes grading and that there are no others, yielding:

PROPOSITION 12.3. *Suppose $I \to J$ just has one level and (V, F) is a Stokes filtered local system indexed by $I \to J$. Then there is unique Stokes graded local system (V, Γ) indexed by $I \to J$, that is compatible with F.*

Stokes groups by level. Suppose $I \to J = I(k_i)$. If V is I-graded and $d \in \partial$ then the three Stokes groups:

$$\mathbb{S}\mathrm{to}_d(I),\ \mathbb{S}\mathrm{to}_d(J),\ \mathbb{S}\mathrm{to}_d(I \to J) \subset \mathrm{GL}(V_d)$$

are well defined.

LEMMA 12.4. *The groups $\mathbb{S}\mathrm{to}_d(J), \mathbb{S}\mathrm{to}_d(I \to J)$ are subgroups of $\mathbb{S}\mathrm{to}_d(I)$ (with $\mathbb{S}\mathrm{to}_d(J)$ being a normal subgroup) and they directly span it in any order. In other words there is a semidirect product decomposition:*

$$\mathbb{S}\mathrm{to}_d(I) = \mathbb{S}\mathrm{to}_d(I \to J) \rtimes \mathbb{S}\mathrm{to}_d(J). \tag{12.5}$$

Indeed there is a parabolic subgroup $P \subset \mathrm{GL}(V_d)$ with Levi decomposition $P = H \cdot U$ such that $\mathbb{S}\mathrm{to}_d(I) \subset P$ and $\mathbb{S}\mathrm{to}_d(I \to J) = \mathbb{S}\mathrm{to}_d(I) \cap H$ and $\mathbb{S}\mathrm{to}_d(J) = \mathbb{S}\mathrm{to}_d(I) \cap U$. Here H is the automorphism group of the J-grading of V_d (not the I-grading).

Iterating as much as possible (as in (12.3)) this gives the level decomposition of the Stokes groups, i.e. the direct spanning deomposition:

$$\mathbb{S}\mathrm{to}_d(I) = \langle\ \mathbb{S}\mathrm{to}_d^k(I)\ \big|\ \ k \text{ is a level of } I\ \rangle^{\oplus} \tag{12.6}$$

where $\mathbb{S}\mathrm{to}_d^k(I)$ is the level k Stokes group, i.e. the subgroup corresponding to the level k Stokes arrows, i.e. the arrows $i \prec_d j$ such that $q_i - q_j$ has slope k. The decomposition (12.5) corresponds to taking the arrows of level $\leq k_i$ (to give $\mathbb{S}\mathrm{to}_d(I \to J)$) and the arrows of level $> k_i$ (to give $\mathbb{S}\mathrm{to}_d(J)$).

Partial associated gradeds. Suppose (V, F) is a Stokes filtered local system indexed by $I \to K$ with $K = I(l)$. Choose $k < l$ and let $J = I(k)$ so that $I \to J \to K \to \partial$. Then two new Stokes filtered local systems indexed by $J \to K$ and by $I \to J$ respectively, can be defined, as follows.

First define a filtration $F^{(k)}$ indexed by J on V:

$$F_d^{(k)}(j) = \sum_{i \in j} F_d(i) \qquad (\text{where } j \in J_d \text{ so } j \subset I_d).$$

LEMMA 12.5. *$(V, F^{(k)})$ is a Stokes filtered local system indexed by $J \to K$.*

Proof. Given a local splitting (grading) of (V, F) indexed by I, we can collapse the grading to be indexed by J. Then $F^{(k)}$ is the associated filtration indexed by J. □

Now let $V^k = \mathrm{Gr}(V, F^{(k)})$ be the corresponding associated graded local system. It is a J-graded local system. Let F^k be the filtration on the fibres of V^k induced by F.

LEMMA 12.6. *(V^k, F^k) is a Stokes filtered local system indexed by $I \to J$, and its associated graded is canonically isomorphic to $\mathrm{Gr}(V, F)$ (as I-graded local systems).*

Proof. We will drop the point $d \in \partial$ from the notation. By definition $V^k(j) = F^{(k)}(j)/F^{(k)}(< j) = \sum_{i \in j} F(i)/\sum_{i<j} F(i)$ where $i \in I$ and $i < j$ means there is some $j' < j$ with $i \in j$. Write $\pi_j : F^{(k)}(j) \twoheadrightarrow V^k(j)$ for the natural projection. Then for all $i \in I, j \in J$:

$$F^k(i) = \bigoplus_{j \in J} F^k(i) \cap V^k(j) \quad \text{where} \quad F^k(i) \cap V^k(j) = \pi_j(F(i) \cap F^{(k)}(j)).$$

As above, a local splitting (grading) of (V, F) indexed by I, will induce a local splitting of $(V, F^{(k)})$, and thus a local isomorphism with its associated graded $(V^k, \mathcal{F}(V^k))$ (with its tautological filtration indexed by J). This gives a local I-grading of V^k and F^k is the associated filtration, thereby showing it satisfies the Stokes conditions (when we start with a local grading across a Stokes direction). The isomorphism of the associated gradeds is left as an exercise. □

Completing the proof. The main result, Thm 11.3, is a special case of the more general statement: Any Stokes filtered local system (V, Θ, F) indexed by $I \to K$ admits a unique Stokes grading Γ, such that F is the Stokes filtration associated to Γ.

In turn this can be proved by induction on the number of levels of $I \to K$. The one level case is Prop. 12.3. If (V, F) has more than one level choose $J = I(k)$ so that $I \to J \to K$ and both of $I \to J$ and $J \to K$ have fewer levels. Then $(V, F^{(k)})$ and (V^k, F^k) both have unique Stokes splittings by induction. Composing these gives a splitting of (V, F) on each singular sector. The level decomposition (12.5),(12.6) of the Stokes groups implies these are a Stokes grading. Again by the decomposition of the Stokes groups, any other Stokes splitting will give a splitting of the two pieces, and thus equal the previous one (by the uniqueness of the lower level splittings). This completes the proof.

It is visually helpful to draw the punctured disk model of the Stokes local system, decomposing each tangential puncture radially into several tangential punctures (one for each level, supported by the corresponding components of the Stokes groups), as in [**18**]§7.2. Then the direct spanning decompositions (12.5),(12.6) amount to factorising loops around these decomposed tangential punctures (this amounts to nesting one level fission spaces as in [**18**, **25**], and reflects the Gevrey filtration [**49**, **50**] as already mentioned).

12.4. Fully faithfullness. Here we will prove fully faithfulness, which hinges on the following proposition. Recall that $\langle 0 \rangle \subset \mathcal{I}$ is the tame circle.

PROPOSITION 12.7. *Let (V, F) be a Stokes filtered local system indexed by $I \to \partial$ and let Γ be the unique compatible Stokes grading. Suppose v is a section of V on ∂, and $v(d) \in F_d\langle 0\rangle$ for all $d \in \partial\backslash\mathbb{S}$. Then $v(d) \in \Gamma_d\langle 0\rangle$ for all $d \in \partial\backslash\mathbb{A}$. Consequently (by Lemma 3.3) v extends uniquely to a section of $\mathrm{Gr}(V, F)_{\langle 0\rangle}$ (the tame piece of the associated graded local system).*

The following corollary shows how the topological picture encodes the fact that if a solution has exponential decay in some direction then it will have exponential growth somewhere else (moderate global solutions cannot decay exponentially anywhere).

COROLLARY 12.8. *Suppose $v, (V, F)$ satisfy the hypotheses of Prop. 12.7. If there exists $d \in \partial \setminus \mathbb{S}$ and $i \in I_d$ such that $i <_d \langle 0\rangle$ and $v(d) \in F_d(i)$, then $v = 0$.*

Proof (of corollary). One of the gradings Γ will split F across d. □

COROLLARY 12.9. *The following two subspaces of $\mathrm{H}^0(V, \partial)$ are equal:*

$$\mathrm{H}^0((V, \Gamma), \partial) := \{v \in \mathrm{H}^0(V, \partial) \mid v(d) \in \Gamma_d\langle 0\rangle \text{ for all } d \in \partial \setminus \mathbb{A}\},$$

$$\mathrm{H}^0((V, F), \partial) := \{v \in \mathrm{H}^0(V, \partial) \mid v(d) \in F_d\langle 0\rangle \text{ for all } d \in \partial \setminus \mathbb{S}\}.$$

Moreover this common vector space embeds naturally in the space $\mathrm{H}^0(\mathrm{Gr}(V, F)_{\langle 0\rangle}, \partial)$ of sections of the tame component of the associated graded local system.

Proof. It is clear that the first space is contained in the second. The reverse inclusion follows from Prop. 12.7, as does the inclusion in $\mathrm{H}^0(\mathrm{Gr}(V, F)_{\langle 0\rangle}, \partial)$. □

COROLLARY 12.10. *The functor φ taking a Stokes graded local system to the associated Stokes filtered local system is fully faithful.*

Proof. Using the internal hom, this comes down to showing that $\mathrm{H}^0((V, \Gamma), \widehat{\Sigma}) = \mathrm{H}^0((V, F), \widehat{\Sigma})$ as subspaces of $\mathrm{H}^0(V, \widehat{\Sigma})$, for any Stokes graded local system (V, Γ), where $(V, F) = \varphi(V, \Gamma)$. This follows from Prop. 12.7 as in Cor. 12.9. □

Proof (of Prop. 12.7). First replace I by $I \cup \langle 0\rangle$ (to avoid a separate argument ruling out the case with $\langle 0\rangle$ absent—it will follow that v is zero then). We will prove (by induction on the number of levels) the more general statement with $I \to \partial$ replaced by $I \to J$.

First suppose $I \to J$ just has one level (and $\langle 0\rangle$ is present in both I and J).

Its enough to prove that if $v(d) \in F_d(i)$ for some $d \in \partial \setminus \mathbb{S}$ and $i \in I_d$ with $i <_d \langle 0\rangle$, then $v = 0$. (Indeed if this holds then $v \in F_d\langle 0\rangle$ will imply $v \in \Gamma_d\langle 0\rangle$.)

Write $\partial\backslash\mathbb{S} = U_0 \cup U_1 \cup \cdots \cup U_{m-1}$ and suppose $d \in U_0$. Choose $i <_d \langle 0\rangle$ minimal in I_d so that $v \in F_d(i)$. Let $c = c(i) \in \mathbb{N}$ be the number of Stokes directions one needs to cross (in a positive sense) before the dominance ordering between i and $\langle 0\rangle$ changes (possibly going around the circle several times). If we pass to U_1 and i does not cross $\langle 0\rangle$, possibly another index j may replace i (as the minimal index so that $v \in F_d(j)$), but in any case the number c will decrease by at least 1:

LEMMA 12.11. *If $j <_d i <_d \langle 0\rangle$ in U_0 and $i <_d j <_d \langle 0\rangle$ in U_1 then $c(j) \leq c(i)$.*

Proof. Since there is only one level k the dominance order of each pair in $i, j, \langle 0\rangle$ changes every π/k. Thus if j crosses above i then j will cross 0 before i does. □

Thus after a finite number of steps there is a Stokes direction τ where the minimal index i will change dominance with $\langle 0\rangle$. Choosing a local splitting of the Stokes filtrations across τ, we see that if v is nonzero then $v \notin F\langle 0\rangle$ on the other side of τ. Thus v is zero.

The general statement can now be deduced. If (V, F) is indexed by $I \to K$ with > 1 levels, then as before there is a factorisation $I \to J \to K$, and $(V, F^{(k)})$ indexed by $J \to K$, and (V^k, F^k) indexed by $I \to J$, both with fewer levels. Given a section v of V with $v(d) \in F_d\langle 0\rangle$ then $v(d) \in F_d^{(k)}\langle 0\rangle$, so we can apply the inductive hypothesis to $(V, F^{(k)})$. Thus v takes values in the tame piece of the Stokes grading $\Gamma^{(k)}$ of V (that splits $F^{(k)}$), and extends uniquely to a section of the tame component of the associated graded, i.e. $V^k\langle 0\rangle$. Thus we get a section of V^k, and by the original hypothesis it lives in the piece $F_d^k\langle 0\rangle$ of the induced filtration. Thus we can apply the inductive hypothesis to (V^k, F^k) and see that v takes values in the tame piece of its Stokes grading Γ^k and extends uniquely to a section of the tame component of the associated graded, $\mathrm{Gr}(V^k, F^k) = \mathrm{Gr}(V, F)$. This is the desired statement (since Γ^k gives Γ once we use view the splitting $\Gamma^{(k)}$ as giving a local isomorphism $V^k \cong V$). $\square$

13. Wild character varieties and moduli problems

This section will review the main implications for the wild character varieties (considered in the generic case in [**9**, **11**, **39**] and in general in [**18**, **25**], using the local theory of [**42**]). Fix a smooth complex projective curve Σ and some marked points $\mathbf{a} \subset \Sigma$. Write $\Sigma^\circ = \Sigma \setminus \mathbf{a}$.

13.1. Tame character varieties. This section will quickly run through the theory of tame character varieties, as a model before discussing the wild case. Let $\mathcal{L}oc\mathcal{S}ys$ be the category of local systems of finite dimensional complex vector spaces (on the topological surface underlying Σ°). Each such local system has an invariant, its rank. Let $\mathcal{L}oc\mathcal{S}ys(n)$ be the groupoid of local systems of rank n (so that isomorphisms are the only maps considered).

The set of isomorphism classes in $\mathcal{L}oc\mathcal{S}ys(n)$ appears as the set of orbits of a complex reductive group on an affine variety, as follows. Choose a basepoint $b \in \Sigma^\circ$ then $\mathcal{L}oc\mathcal{S}ys(n)$ is equivalent to the category of rank n modules for the group $\pi_1(\Sigma^\circ, b)$ (taking a local system to its monodromy representation). Recall that a framed local system is a local system V equipped with a framing at b, i.e. a basis $\phi : \mathbb{C}^n \to V_b$ of the fibre at b. The *representation variety*

$$\mathcal{R}_n = \mathrm{Hom}(\pi_1(\Sigma^\circ, b), \mathrm{GL}_n(\mathbb{C}))$$

is the set of isomorphism classes of framed rank n local systems. Choosing a presentation of $\pi_1(\Sigma^\circ, b)$ makes it clear that $\mathcal{R}_n$ is an affine variety (replace the generators by elements of $\mathrm{GL}_n(\mathbb{C})$ in the relation). Changing the framing corresponds to the conjugation action of $G = \mathrm{GL}_n(\mathbb{C})$ on $\mathcal{R}_n$, and it follows that the set of isomorphism classes in $\mathcal{L}oc\mathcal{S}ys(n)$ is in bijection with the set of G orbits in the affine variety $\mathcal{R}_n$.

The *character stack* $\mathfrak{M}_n$ is the stack theoretic quotient of $\mathcal{R}_n$ by G, whereas the *character variety* $\mathcal{M}_n$ is the affine geometric invariant theory quotient of $\mathcal{R}_n$

by G, i.e. $\mathcal{M}_n$ is the variety associated to the ring

$$\mathbb{C}[\mathcal{R}_n]^G$$

of G-invariant functions on the affine variety $\mathcal{R}_n$. This ring is finitely generated since G is reductive.

It is well-known that $\mathcal{M}_n$ has an algebraic Poisson structure with symplectic leaves given by fixing the isomorphism class of the local system in a small punctured disk around each puncture (this is the same as fixing the conjugacy class of monodromy around each puncture).

13.2. Wild character varieties. The definition of the wild character varieties now follows a similar pattern. Let $\mathcal{SL}ocSys$ be the category of Stokes local systems associated to $\Sigma, \mathbf{a}$. To simplify the presentation suppose $\mathbf{a}$ consists of just one point. The general case is in [**18**, **25**]. Each such Stokes local system has an invariant, its irregular class. Let $\mathcal{SL}ocSys(\Theta)$ be the groupoid of Stokes local systems of class Θ (so that isomorphisms are the only maps considered). In particular this fixes its rank, $n = \mathrm{rk}(\Theta)$.

The set of isomorphism classes in $\mathcal{SL}ocSys(\Theta)$ appears as the set of orbits of a complex reductive group on an affine variety, as follows. (This will then yield the wild character variety $\mathcal{M}_\Theta$ of the irregular curve $\mathbf{\Sigma} = (\Sigma, \mathbf{a}, \Theta)$.)

Let $\widetilde{\Sigma} \subset \widehat{\Sigma}$ be the auxiliary curve determined by the irregular class Θ (removing a tangential puncture near each singular direction). Choose a basepoint $b \in \partial$ then $\mathcal{SL}ocSys(\Theta)$ embeds in the category of rank n modules for the group $\Pi := \pi_1(\widetilde{\Sigma}, b)$ (the *wild surface group*). A framed Stokes local system is a Stokes local system $\mathbb{V}$ equipped with a framing at b, i.e. an isomorphism $\phi : \mathbb{F} \to \mathbb{V}_b$ of graded vector spaces, where $\mathbb{F} = \mathbb{C}^\Theta := \bigoplus_{i \in \mathcal{I}_b} \mathbb{C}^{\Theta(i)}$ is the standard fibre—a graded vector space of dimension Θ, so that $\mathbb{F}(i) = \mathbb{C}^{\Theta(i)}$.

The *naive wild representation variety* is the space $\mathrm{Hom}(\Pi, G)$ where $G = \mathrm{GL}(\mathbb{F}) \cong \mathrm{GL}_n(\mathbb{C})$. Each framed Stokes local system canonically determines a point of $\mathrm{Hom}(\Pi, G)$ and it is easy to characterise the subvariety of Stokes representations (the wild representation variety)

$$\mathcal{R}_\Theta = \mathrm{Hom}_{\mathbb{S}}(\Pi, G) \subset \mathrm{Hom}(\Pi, G)$$

where the monodromy of Stokes local systems lives (reflecting the facts that the monodromy around ∂ should be the monodromy of a graded local system, and the Stokes conditions, that monodromy around each tangential puncture should land in the corresponding Stokes group). This will be spelt out below in §13.3.

In this way $\mathcal{R}_\Theta = \mathrm{Hom}_{\mathbb{S}}(\Pi, G)$ is the set of isomorphisms classes of framed Stokes local systems of class Θ. Choosing a presentation of Π makes it clear that $\mathcal{R}_\Theta$ is an affine variety (since the Stokes groups are affine too). Changing the framing corresponds to the conjugation action of $H = \mathrm{GrAut}(\mathbb{F}) \subset G$ on $\mathcal{R}_\Theta$, and it follows that the set of isomorphism classes in $\mathcal{SL}ocSys(\Theta)$ is in bijection with the set of H orbits in the affine variety $\mathcal{R}_\Theta$. Thus this key fact still persists in the wild case.

Similarly a framing of a Stokes filtered local system (V, F, Θ) is a graded isomorphism $\phi : \mathbb{F} \to \mathrm{Gr}(V, F)_b$, and a framing of a Stokes graded local system (V, Γ, Θ) is a graded isomorphism $\phi : \mathbb{F} \to (V, \Gamma_b)$, taking the median grading if b is a singular direction. The main result of this paper then implies the following statement:

COROLLARY 13.1. *The wild representation variety* $\mathcal{R}_\Theta = \mathrm{Hom}_{\mathbb{S}}(\Pi, G)$ *parameterises the set of isomorphism classes of:*

- *Framed Stokes filtered local systems of class* Θ*, and also of*
- *Framed Stokes graded local systems of class* Θ*, and also of*
- *Framed Stokes local systems of class* Θ*.*

Note this corollary also follows from the local result in [**42**] after some identifications.

In turn the *wild character stack* $\mathfrak{M}_\Theta$ is the stack theoretic quotient of $\mathcal{R}_\Theta$ by H, whereas the *wild character variety* $\mathcal{M}_\Theta$ is the affine geometric invariant theory quotient of $\mathcal{R}_\Theta$ by H, i.e. $\mathcal{M}_\Theta$ is the variety associated to the ring

$$\mathbb{C}[\mathcal{R}_\Theta]^H$$

of H-invariant functions on the affine variety $\mathcal{R}_\Theta$. This ring is finitely generated since H is reductive. Stability for the action of H has been analysed in [**18**].

Results of [**10**, **11**, **13**, **15**, **18**, **25**] show that the wild character variety $\mathcal{M}_\Theta$ has an algebraic Poisson structure with symplectic leaves given by fixing the isomorphism class of the graded local system in the halo (this is the same as fixing a twisted conjugacy class for the group H, cf. [**25**]). This generalises the tame case, where there are no tangential punctures, and the grading is trivial (everything is graded by the tame circle $\langle 0 \rangle$).

13.3. Here is how to define the subvariety $\mathrm{Hom}_{\mathbb{S}}(\Pi, G) \subset \mathrm{Hom}(\Pi, G)$. Let $\widehat{\rho}_\partial : I_b \to I_b$ be the monodromy of the active exponents $I \to \partial$ (in a positive sense), and let $\rho : \Pi \to \mathrm{GL}(\mathbb{F})$ be the monodromy of a Stokes local system $\mathbb{V}$ of class Θ.

1) Due to the I-grading of $\mathbb{V}$ on ∂, the monodromy satisfies

$$\rho_\partial(\mathbb{F}(i)) = \mathbb{F}(\widehat{\rho}_\partial(i)) \tag{13.1}$$

for all $i \in I_b$.

If $d \in \mathbb{A}$ let α be any path in ∂ from b to d, and let γ_d be the simple loop based at d going out to $e(d)$ around it in a positive sense and then back to d. Then let $\eta_d = \alpha^{-1} \circ \gamma_d \circ \alpha$ be the corresponding loop based at b. Let $\mathcal{S}\mathrm{to}_d \subset \mathrm{GL}(\mathbb{F})$ be the group obtained by transporting $\mathbb{S}\mathrm{to}_d \subset \mathrm{GL}(\mathbb{V}_d)$ along α to b and then to $\mathrm{GL}(\mathbb{F})$ via the framing.

2) The Stokes conditions then say that

$$\rho(\eta_d) \in \mathcal{S}\mathrm{to}_d \tag{13.2}$$

for all such d and α.

The subvariety $\mathrm{Hom}_{\mathbb{S}}(\Pi, G) \subset \mathrm{Hom}(\Pi, G)$ is cut out by these two conditions. By choosing generators of Π this is easily made completely explicit, and yields the Birkhoff type presentations of the wild character variety, as the quotient by H of the fibre at 1 of a map of the form

$$G^{2g} \times H(\partial) \times \mathcal{S}\mathrm{to} \to G; \qquad (\mathbf{A}, \mathbf{B}, h, \mathbf{S}) \mapsto \left(\prod_1^g [A_i, B_i] \right) h S_r \cdots S_2 S_1$$

where $[A, B] = ABA^{-1}B^{-1}$, $\mathcal{S}\mathrm{to} \subset G^r$ is a product of Stokes groups and

$$H(\partial) = \{ h \in G \mid h(\mathbb{F}(i)) = \mathbb{F}(\widehat{\rho}_\partial(i)) \text{ for all } i \in I_b \}$$

is the twist of H consisting of elements satisfying the relation (13.1). See [**18**] equation (37) (and [**25**]) for the multipoint case—the generic case in genus zero

is in [**39**] (2.46), closely related to that of Birkhoff [**9**] §15. These presentations motivated the TQFT approach to meromorphic connections [**11**, **13**, **15**, **18**, **25**] where such quotients are shown to be multiplicative symplectic quotients, and thus have natural symplectic/Poisson structures.

Remark 13.2. The full story involves adding tame (Levelt–Simpson) filtrations as well, and the resulting wild character varieties will not in general be affine (the case here corresponds to having trivial Betti weights, denoted ϕ in [**22**], γ in [**7**], β in [**56**]).

Remark 13.3. In general [**18**,**25**], in order to fit well with the group-valued moment map approach, the group Π is usually replaced by the fundamental groupoid $\Pi_1(\widetilde{\Sigma}, \beta)$ where $\beta \subset \widetilde{\Sigma}$ consists of one point in each component circle of ∂. Beware that a different groupoid was used earlier (in [**11**] p.160) to encode Stokes data.

Remark 13.4. The Stokes decompositions and wild monodromy/Stokes local system don't seem to have been used in the linear setting beyond the curve case, so these approaches may well simplify and render more explicit existing approaches (cf. [**27**]). New examples of such wild character varieties seem lacking (see the problem at the end of §1.6 in [**22**]).

13.4. Wild nonabelian periods/wild Wilson loops. Functions on $\mathcal{R}_\Theta$ invariant under the action of H may be constructed as follows. In the tame case, one would just take the trace of the monodromy around loops in the surface. In general one can take the wild monodromy, i.e. the monodromy of the Stokes local system along wild loops, i.e. loops in $\widetilde{\Sigma}$. Moreover if the wild loop is based in ∂ then the fibre is graded so there are more invariants than just the trace (one only needs to quotient by the graded automorphisms).

Let $K = K(I_b)$ be the complete quiver with nodes I_b. This has a loop at each node and a directed edge in each direction between each pair of distinct nodes. Thus if V is any I_b-graded vector space then $\mathrm{End}(V)$ is the same as the space $\mathrm{Rep}(K, V)$ of quiver representations of K on V:

$$\mathrm{End}(V) = \mathrm{Rep}(K, V).$$

Any cycle (i.e. a loop) C in K determines an H-invariant function

$$\phi_C : \mathrm{Rep}(K, V) \to \mathbb{C}$$

by taking the trace of the composition of the maps along the edges in the cycle C. Here $H = \mathrm{GrAut}(V)$. Now given $\rho \in \mathcal{R}_\Theta = \mathrm{Hom}_{\mathbb{S}}(\Pi, \mathrm{GL}(\mathbb{F}))$ and a loop $\gamma \in \Pi$, i.e. a loop in $\widetilde{\Sigma}$ based at b then $\rho(\gamma) \in \mathrm{GL}(\mathbb{F}) \subset \mathrm{End}(\mathbb{F}) = \mathrm{Rep}(K, \mathbb{F})$. Thus there is an H-invariant function

$$\phi_{C,\gamma} : \mathcal{R}_\Theta \to \mathbb{C}; \quad \rho \mapsto \phi_{C,\gamma}(\rho) := \phi_C(\rho(\gamma)) \tag{13.3}$$

for each choice of cycle C in K and wild loop $\gamma \in \Pi$. Of course given a Stokes local system $\mathbb{V}$ with irregular class Θ there is no need to discuss framings, and one can just work with the graded vector space $\mathbb{V}_b$; A Stokes representation $\widehat{\rho} \in \mathrm{Hom}_{\mathbb{S}}(\Pi, \mathrm{GL}(\mathbb{V}_b))$ is intrinsically defined and this is enough to construct numbers $\phi_{C,\gamma}(\widehat{\rho})$ that depend only on the isomorphism class of $\mathbb{V}$. Of course these numbers are invariants of the corresponding connection ∇ too: for each choice of loop γ and cycle C the complex number $\phi_{C,\gamma}(\nabla) := \phi_{C,\gamma}(\widehat{\rho})$ is well defined. They are the "wild nonabelian periods/wild Wilson loops" of ∇.

Appendix A. Analytic black boxes

For completeness this section gives a quick review of the analytic results used to define the topological data (or to show they have the desired properties). The analytic results will be presented/used as black boxes, and aren't used elsewhere in this article. The different approaches to Stokes data arise from the use of different analytic tools. One particular aim is to show how the abstract/intrinsic language used here encapsulates what most authors actually do when defining monodromy/Stokes data.

A.1. Cauchy and local systems. Let $(E, \nabla) \to \Sigma^\circ$ be an algebraic connection on an algebraic vector bundle E on Σ°. Thus ∇ is an operator $\nabla : E \to E \otimes \Omega^1$ which is a $\mathbb{C}$-linear map of sheaves, satisfying the Leibniz rule $\nabla(fv) = (df)v + f\nabla(v)$ for any local section v and function f. For example take $E = \mathbb{C}^n \times \Sigma^\circ$ to be trivial and $\Sigma^\circ \subset \mathbb{C}$ to be the complement of a finite number of points in the complex plane, and $\nabla = d - Bdz$ for any algebraic map $B : \Sigma^\circ \to \mathfrak{gl}_n(\mathbb{C})$. The basic existence/uniqueness theorem for systems of linear ODEs implies the following.

Theorem A.1. *If $\Delta \subset \Sigma^\circ$ is a disk then the space*

$$V(\Delta) = \{v \in \mathrm{H}^0(E^{an}, \Delta) \mid \nabla(v) = 0\}$$

of analytic solutions of (E, ∇) on Δ is a finite dimensional complex vector space, and the map

$$V(\Delta) \to E_b; \qquad v \mapsto v(b)$$

to the fibre of E at b, is a linear isomorphism for any $b \in \Delta$.

Proof. Choose a local trivialisation of E^{an} (the analytic vector bundle determined by E) on Δ and a coordinate z on Δ, so $V(\Delta)$ becomes identified with the holomorphic maps $v : \Delta \to \mathbb{C}^n$ such that $dv/dz = Bv$ for some matrix of holomorphic functions B on Δ (so that the connection is $d - Bdz$). Now use the existence/uniqueness theorem for this system of linear ODEs. □

This analytic fact defines the local system $V \to \Sigma^\circ$ of solutions of (E, ∇).

A.2. Stokes filtrations and the local asymptotic existence theorem. Given the local system $V \to \Sigma^\circ$ of solutions of (E, ∇), the n-dimensional vector space V_d is well-defined for any $d \in \partial$ (see §4.3).

The Stokes filtration in V_d is defined by looking for the subspace of recessive solutions, i.e. those with maximal exponential decay (or least growth), in some algebraic trivialisation of E across the pole. Then quotient V_d by the subspace of recessive solutions and iterate to get the filtration. The fact that this process works, and the result is a Stokes filtration, follows from the local asymptotic existence theorem (in turn this uses the formal classification of meromorphic connections). In general, given $d \in \partial$ and $q \in \mathcal{I}_d$ the corresponding piece $F_d(q) \subset V_d$ of the Stokes filtration is made up of the solutions $v \in V_d$ such that $v/\exp(q)$ has at most moderate growth at 0 in some open sector containing d.

Choose a small disk $\Delta \subset \Sigma$ containing a marked point a. Choose a coordinate z on Δ vanishing at a and a local trivialisation of E, so that

$$\nabla = d - A, \qquad A = \sum_{-N}^{\infty} A_i z^i dz$$

where $A_i \in \mathfrak{gl}_n(\mathbb{C})$ and the series is convergent.

For simplicity suppose ∇ is unramified (the general case follows by descent). Then the formal classification implies that there is $\widehat{F} \in \mathrm{GL}_n(\mathbb{C}((z)))$ such that

$$A = \widehat{F}[A^0] = \widehat{F}A^0\widehat{F}^{-1} + (d\widehat{F})\widehat{F}^{-1} \quad \text{where } A^0 = dQ + \Lambda\frac{dz}{z},\ Q = \mathrm{diag}(q_1, \dots, q_n).$$

Here Q is an irregular type, with $q_i \in z^{-1}\mathbb{C}[z^{-1}]$, and $\Lambda \in \mathfrak{gl}_n(\mathbb{C})$ is a constant matrix that commutes with Q.

Thus $\widehat{F}$ is a formal isomorphism taking ∇^0 to ∇, where $\nabla^0 = d - A^0$ (often called the formal normal form). The irregular class is given by the $\langle q_i \rangle$ with their multiplicities (each is a trivial cover of the circle ∂). The general result is that one can always pass to a cyclic cover ($t^r = z$) and then get such a formal normal form upstairs.

The local asymptotic existence theorem (cf. [**61**] Thm. 19.1) says that any direction $d \in \partial$ has a (small) open neighbourhood $U \subset \partial$ on which there exists an analytic isomorphism F taking ∇^0 to ∇, that is asymptotic at zero to $\widehat{F}$ in U.

The topological interpretation is as follows:

1) $\nabla^0 = d - A^0$ is a graded connection, it breaks up into a direct sum of connections indexed by the set $z^{-1}\mathbb{C}[z^{-1}]$ of unramified irregular classes. Thus its solutions form a graded local system V^0 (on a germ of a punctured disc, or equivalently on ∂).

2) The local asymptotic existence theorem gives local isomorphisms between V^0 and V (on ∂). Since V^0 is graded, this gives local gradings of V. These gradings are not intrinsic, but the associated filtrations are completely intrinsic, and moreover the condition for the existence of such local gradings splitting the filtrations gives a way to axiomatise the filtrations. This is Deligne's idea [**29**] yielding the Stokes filtrations and the axioms for Stokes filtered local systems.

3) The associated graded local system $\mathrm{Gr}(V) \to \partial$ of the Stokes filtration is intrinsically defined. The choice of ∇^0 determines a graded local system V^0 (its solutions), and the choice of a formal isomorphism $\widehat{F}$ then uniquely determines an isomorphism $V^0 \to \mathrm{Gr}(V)$ of graded local systems (induced by any such local analytic isomorphism F). This gives a bijection between the set of such $\widehat{F}$ and such graded isomorphisms (the categories of formal connections and graded local systems are equivalent [**29**]).

Remark A.2. If instead one chooses an open cover of ∂ and such a local isomorphism F on each open set, and examines how they differ on two-fold overlaps, one gets to the Malgrange–Sibuya cohomological approach [**43**, **54**]. This amounts to taking the cohomology class classifying the sheaf of torsors determined by the sets Splits_d of splittings.

A.3. Summation and preferred bases. The general Stokes approach comes from an apparently stronger analytic existence theorem [**4**], involving multisummation in general (which generalises k-summation, and in turn Borel summation).

In the set-up above with $\nabla = \widehat{F}[\nabla^0]$ this says that there are a finite number of singular directions $\mathbb{A} \subset \partial$ and a preferred analytic isomorphism $F_U \in \mathrm{Iso}_U(\nabla^0, \nabla)$ canonically determined by $\widehat{F}$ on each singular sector $U \subset \partial$.

In particular, given the choice of a solution w of ∇^0 on U then $\widehat{F}w$ is a formal solution of ∇, and the theorem implies this determines a preferred solution $F_U w$ of ∇. In other words formal solutions determine preferred analytic solutions. This is

the form of the result discovered by Stokes (in the examples related to the Airy and Bessel equations). Stokes used optimal truncation rather than Borel summation, but one can check the preferred solutions he specified (for each formal solution) are the same as those one gets from Borel summation.

1) On any singular sector U the element $F_U \in \mathrm{Iso}(\nabla^0, \nabla)$ yields a grading of the local system V of solutions of ∇ (since ∇^0 is graded). The key remark to make then is that this is the Stokes grading, and it depends only on ∇ (and not the choice of $\widehat{F}, \nabla^0$).

2) V, V^0 and the gluing maps F_U make up a Stokes local system with gluing maps.

This Stokes local system is isomorphic to the canonical Stokes local system (determined by the Stokes gradings in 1) via the converse part of §9), once V^0 is identifed with the canonical graded local system via the choice of $\widehat{F}$ (via 3) of §A.2 and Rmk 11.4)

In particular the corresponding Stokes representations will be isomorphic. This is good to know since these Stokes local systems are the ones used in practice (via choices of normal forms at each pole).

Note that the equivalence between Stokes gradings and Stokes filtrations, implies that the analytic results of §A.2 and §A.3 are in fact algebraically equivalent.

A.4. Intuitive way to understand Borel summation etc. Consider the following quite familiar statement:

(A.1) *Sometimes a power series determines a holomorphic function outside of its domain of convergence.*

Indeed one can just consider the power series at zero of the function $1/(1-x)$. This has a pole at $x = 1$ so the series has radius of convergence 1, yet clearly the function defined by the power series can be analytically continued outside the unit disk (avoiding 1). Similarly the power series at zero for $1/\sqrt{1-x}$ defines a holomorphic function in the unit disk, however now the branch of the function obtained outside the unit disk depends on which side of the point $x = 1$ one takes: for example at $x = 2$ one may get either sign in $\pm i$ depending on the path taken. One can readily cook up more examples with more *singular directions* on the unit circle, and in turn examples with arbitrarily small radius of convergence.

The key point (to intuitively understand Borel summation etc) is that the statement (A.1) may hold *even if the series has radius of convergence zero.* Indeed this is precisely what Borel summation does: away from the singular directions a holomorphic function is determined, and something like a different branch of the same function appears if a different direction is used, on the other side of a singular direction.

This interpretation is in Stokes' paper [**57**]. Stokes viewed the singular directions as limits of the singular points in the example above, as the radius of convergence goes to zero. Since we are working topologically we can pull these singularities slightly out of the pole, and thus define the tangential punctures (this is justified by the fact that an equivalence of categories can be proved).

The fact that any formal series solution of a linear differential equation is multisummable (and the singular directions are easy to determine) is remarkable. Multisummation is a morphism of differential algebras and so formal solutions sum to actual solutions.

In fact Stokes worked with optimal truncation, not the Borel sum, so another puzzle is how to relate them. For this consider another familiar statement:

(A.2) *Sometimes the partial sum of a power series differs from the full sum by less than the modulus of the first term omitted.*

This leads to "optimal truncation": stopping the sum at the smallest term, and using that to approximate the actual sum. Stokes applied this to a divergent series and in this way was able to detect the preferred solutions. This application can be justified since, in the cases where Stokes applied it, the statement (A.2) is true provided one replaces "full sum" by "Borel sum" (cf. [**62**] p.219). Thus the optimal truncation used by Stokes approximates the Borel sum in much the same way that optimal truncation approximates the usual sum in the case of a convergent series. The difference in the divergent case is that there are singular directions, and the Borel sums on each side of a singular direction are not analytic continuations of each other across the direction. These are the singular directions detected by Stokes.

Acknowledgments

The whole philosophy of *deferral of choices*, to set up an intrinsic topological approach, is no doubt due to Deligne—the approaches to Stokes decompositions and Stokes local systems here are leveraged from his approach to the Stokes filtrations (and their associated graded local systems). The Stokes local systems (or *wild local systems*) arose from the desire to remove the basepoints in Ramis' wild fundamental group [**47**], as well, of course, from the desire to define the local system whose monodromy yields the explicit presentation given by Birkhoff [**9**] (and [**39**]). The author lectured on the three main paradigms described here at the Aberdeen ARTIN meeting in March 2018 and the Timișoara GaP meeting in May 2018, and this helped clarify the presentation. The picture on the title page first appeared in [**21**].

References

[1] Milton Abramowitz and Irene A. Stegun, *Handbook of mathematical functions with formulas, graphs, and mathematical tables*, National Bureau of Standards Applied Mathematics Series, vol. 55, For sale by the Superintendent of Documents, U.S. Government Printing Office, Washington, D.C., 1964. MR0167642

[2] Donald G. Babbitt and V. S. Varadarajan, *Local moduli for meromorphic differential equations*, Bull. Amer. Math. Soc. (N.S.) **12** (1985), no. 1, 95–98, DOI 10.1090/S0273-0979-1985-15300-5. MR766962

[3] ———, *Local moduli for meromorphic differential equations*, Astérisque **169-170** (1989), 1–217.

[4] W. Balser, B. L. J. Braaksma, J.-P. Ramis, and Y. Sibuya, *Multisummability of formal power series solutions of linear ordinary differential equations*, Asymptotic Anal. **5** (1991), no. 1, 27–45. MR1132079

[5] W. Balser, W. B. Jurkat, and D. A. Lutz, *Birkhoff invariants and Stokes' multipliers for meromorphic linear differential equations*, J. Math. Anal. Appl. **71** (1979), no. 1, 48–94, DOI 10.1016/0022-247X(79)90217-8. MR545861

[6] W. Balser, W. B. Jurkat, and D. A. Lutz, *A general theory of invariants for meromorphic differential equations. II. Proper invariants*, Funkcial. Ekvac. **22** (1979), no. 3, 257–283. MR577846

[7] Olivier Biquard and Philip Boalch, *Wild non-abelian Hodge theory on curves*, Compos. Math. **140** (2004), no. 1, 179–204, DOI 10.1112/S0010437X03000010. MR2004129

[8] George D. Birkhoff, *Singular points of ordinary linear differential equations*, Trans. Amer. Math. Soc. **10** (1909), no. 4, 436–470, DOI 10.2307/1988594. MR1500848

[9] ———, *The generalized Riemann problem for linear differential equations and allied problems for linear difference and q-difference equations*, Proc. Amer. Acad. Arts and Sci. **49** (1913), 531–568.

[10] P. P. Boalch, *Symplectic geometry and isomonodromic deformations*, D.Phil. Thesis, Oxford University, 1999. (available at: `https://tel.archives-ouvertes.fr/`)

[11] Philip Boalch, *Symplectic manifolds and isomonodromic deformations*, Adv. Math. **163** (2001), no. 2, 137–205, DOI 10.1006/aima.2001.1998. MR1864833

[12] Philip P. Boalch, *G-bundles, isomonodromy, and quantum Weyl groups*, Int. Math. Res. Not. **22** (2002), 1129–1166, DOI 10.1155/S1073792802111081. MR1904670

[13] Philip Boalch, *Quasi-Hamiltonian geometry of meromorphic connections*, Duke Math. J. **139** (2007), no. 2, 369–405, DOI 10.1215/S0012-7094-07-13924-3. MR2352135

[14] ———, *Irregular connections and Kac–Moody root systems,* arXiv:0806.1050, 2008.

[15] Philip Boalch, *Through the analytic Halo: fission via irregular singularities* (English, with English and French summaries), Ann. Inst. Fourier (Grenoble) **59** (2009), no. 7, 2669–2684. MR2649336

[16] ———, *Habilitation memoir*, Université Paris-Sud 12/12/12, (arXiv:1305.6593), 2012.

[17] ———, *Hyperkähler manifolds and nonabelian Hodge theory of (irregular) curves*, 2012, text of talk at Institut Henri Poincaré 17/1/2012, hal-00672481, arXiv:1203.6607.

[18] P. P. Boalch, *Geometry and braiding of Stokes data; fission and wild character varieties*, Ann. of Math. (2) **179** (2014), no. 1, 301–365, DOI 10.4007/annals.2014.179.1.5. MR3126570

[19] Philip Boalch, *Poisson varieties from Riemann surfaces*, Indag. Math. (N.S.) **25** (2014), no. 5, 872–900, DOI 10.1016/j.indag.2014.07.004. MR3264779

[20] ———, *Nonabelian Hodge spaces and nonlinear representation theory*, 2017, Talk given at IHES, June 2017, video on youtube, slides on author's webpage.

[21] ———, *Poster for conference on irregular connections, character varieties and physics, Paris VII*, organised by P.B. and E. Letellier, `https://imj-prg.fr/~philip.boalch/Mars2017/`, 2017.

[22] Philip Boalch, *Wild character varieties, meromorphic Hitchin systems and Dynkin diagrams*, Geometry and physics. Vol. II, Oxford Univ. Press, Oxford, 2018, pp. 433–454. MR3931781

[23] Philip Boalch, *Wild character varieties, points on the Riemann sphere and Calabi's examples*, Representation theory, special functions and Painlevé equations—RIMS 2015, Adv. Stud. Pure Math., vol. 76, Math. Soc. Japan, Tokyo, 2018, pp. 67–94, DOI 10.2969/aspm/07610067. MR3837919

[24] ———, *TQFT approach to meromorphic connections*, videos of IST Lectures on Algebraic Geometry and Physics, https://camgsd.tecnico.ulisboa.pt/encontros/lagp/2020/, 2020.

[25] P. P. Boalch and D. Yamakawa, *Twisted wild character varieties*, arXiv:1512.08091, 2015.

[26] Armand Borel, *Linear algebraic groups*, 2nd ed., Graduate Texts in Mathematics, vol. 126, Springer-Verlag, New York, 1991. MR1102012

[27] Andrea D'Agnolo and Masaki Kashiwara, *Riemann-Hilbert correspondence for holonomic D-modules*, Publ. Math. Inst. Hautes Études Sci. **123** (2016), 69–197, DOI 10.1007/s10240-015-0076-y. MR3502097

[28] Pierre Deligne, *Équations différentielles à points singuliers réguliers* (French), Lecture Notes in Mathematics, Vol. 163, Springer-Verlag, Berlin-New York, 1970. MR0417174

[29] ———, *letter to B. Malgrange*, 2pp., 19 April, 1978 (see [**32**]).

[30] P. Deligne, *Le groupe fondamental de la droite projective moins trois points* (French), Galois groups over **Q** (Berkeley, CA, 1987), Math. Sci. Res. Inst. Publ., vol. 16, Springer, New York, 1989, pp. 79–297, DOI 10.1007/978-1-4613-9649-9_3. MR1012168

[31] P. Deligne and G. Lusztig, *Representations of reductive groups over finite fields*, Ann. of Math. (2) **103** (1976), no. 1, 103–161, DOI 10.2307/1971021. MR393266

[32] Pierre Deligne, Bernard Malgrange, and Jean-Pierre Ramis, *Singularités irrégulières* (French), Documents Mathématiques (Paris) [Mathematical Documents (Paris)], vol. 5, Société Mathématique de France, Paris, 2007. Correspondance et documents. [Correspondence and documents]. MR2387754

[33] R. B. Dingle, *Asymptotic expansions: their derivation and interpretation*, Academic Press [A subsidiary of Harcourt Brace Jovanovich, Publishers], London-New York, 1973. MR0499926

[34] B. A. Dubrovin, V. B. Matveev, and S. P. Novikov, *Nonlinear equations of Korteweg-de Vries type, finite-band linear operators and Abelian varieties* (Russian), Uspehi Mat. Nauk **31** (1976), no. 1(187), 55–136; reprinted in G. Wilson (ed.), *Integrable systems*, 1981. selected papers, LMS LMN **60**, pp. 53–140. MR0427869

[35] J. Écalle, *Les fonctions résurgentes.*, Publications Mathématiques d'Orsay 81, 1981.

[36] H. Flaschka and A. C. Newell, *The inverse monodromy transform is a canonical transformation*, Nonlinear problems: present and future (Los Alamos, N.M., 1981), North-Holland Math. Stud., vol. 61, North-Holland, Amsterdam-New York, 1982, pp. 65–89. MR675628

[37] Athanassios S. Fokas, Alexander R. Its, Andrei A. Kapaev, and Victor Yu. Novokshenov, *Painlevé transcendents*, Mathematical Surveys and Monographs, vol. 128, American Mathematical Society, Providence, RI, 2006. The Riemann-Hilbert approach. MR2264522

[38] A. Hatcher, comment on Math Overflow, at: https://mathoverflow.net/questions/25472/fundamental-group-of-the-line-with-the-double-origin, 2010.

[39] Michio Jimbo, Tetsuji Miwa, and Kimio Ueno, *Monodromy preserving deformation of linear ordinary differential equations with rational coefficients. I. General theory and τ-function*, Phys. D **2** (1981), no. 2, 306–352, DOI 10.1016/0167-2789(81)90013-0. MR630674

[40] W. B. Jurkat, *Meromorphe Differentialgleichungen* (German), Lecture Notes in Mathematics, vol. 637, Springer, Berlin, 1978. MR494886

[41] Nicholas M. Katz, *An overview of Deligne's work on Hilbert's twenty-first problem*, Mathematical developments arising from Hilbert problems (Proc. Sympos. Pure Math., Vol. XXVIII, Northern Illinois Univ., De Kalb, Ill., 1974), Amer. Math. Soc., Providence, R. I., 1976, pp. 537–557. MR0432640

[42] Michèle Loday-Richaud, *Stokes phenomenon, multisummability and differential Galois groups* (English, with English and French summaries), Ann. Inst. Fourier (Grenoble) **44** (1994), no. 3, 849–906. MR1303886

[43] B. Malgrange, *Remarques sur les équations différentielles à points singuliers irréguliers* (French), Équations différentielles et systèmes de Pfaff dans le champ complexe (Sem., Inst. Rech. Math. Avancée, Strasbourg, 1975), Lecture Notes in Math., vol. 712, Springer, Berlin, 1979, pp. 77–86. MR548145

[44] B. Malgrange, *La classification des connexions irrégulières à une variable* (French), Mathematics and physics (Paris, 1979/1982), Progr. Math., vol. 37, Birkhäuser Boston, Boston, MA, 1983, pp. 381–399. MR728430

[45] B. Malgrange, *Sur les déformations isomonodromiques. I. Singularités régulières* (French), Mathematics and physics (Paris, 1979/1982), Progr. Math., vol. 37, Birkhäuser Boston, Boston, MA, 1983, pp. 401–426. MR728431

[46] B. Malgrange, *Équations différentielles à coefficients polynomiaux* (French), Progress in Mathematics, vol. 96, Birkhäuser Boston, Inc., Boston, MA, 1991. MR1117227

[47] Jean Martinet and Jean-Pierre Ramis, *Elementary acceleration and multisummability. I*, Ann. Inst. H. Poincaré Phys. Théor. **54** (1991), no. 4, 331–401. MR1128863

[48] Emmanuel Paul and Jean-Pierre Ramis, *Dynamics on wild character varieties*, SIGMA Symmetry Integrability Geom. Methods Appl. **11** (2015), Paper 068, 21, DOI 10.3842/SIGMA.2015.068. MR3383320

[49] Jean-Pierre Ramis, *Phénomène de Stokes et filtration Gevrey sur le groupe de Picard-Vessiot* (French, with English summary), C. R. Acad. Sci. Paris Sér. I Math. **301** (1985), no. 5, 165–167. MR801953

[50] Jean-Pierre Ramis, *Phénomène de Stokes et resommation* (French, with English summary), C. R. Acad. Sci. Paris Sér. I Math. **301** (1985), no. 4, 99–102. MR799602

[51] Jean-Pierre Ramis, *Stokes phenomenon: historical background*, The Stokes phenomenon and Hilbert's 16th problem (Groningen, 1995), World Sci. Publ., River Edge, NJ, 1996, pp. 1–5. MR1443685

[52] Claude Sabbah, *Harmonic metrics and connections with irregular singularities* (English, with English and French summaries), Ann. Inst. Fourier (Grenoble) **49** (1999), no. 4, 1265–1291. MR1703088

[53] Yasutaka Sibuya, *Global theory of a second order linear ordinary differential equation with a polynomial coefficient*, North-Holland Publishing Co., Amsterdam-Oxford; American Elsevier Publishing Co., Inc., New York, 1975. North-Holland Mathematics Studies, Vol. 18. MR0486867

[54] Yasutaka Sibuya, *Stokes phenomena*, Bull. Amer. Math. Soc. **83** (1977), no. 5, 1075–1077, DOI 10.1090/S0002-9904-1977-14391-7. MR442337

[55] Yasutaka Sibuya, *Linear differential equations in the complex domain: problems of analytic continuation*, Translations of Mathematical Monographs, vol. 82, American Mathematical Society, Providence, RI, 1990. Translated from the Japanese by the author. MR1084379

[56] Carlos T. Simpson, *Harmonic bundles on noncompact curves*, J. Amer. Math. Soc. **3** (1990), no. 3, 713–770, DOI 10.2307/1990935. MR1040197

[57] G. G. Stokes, *On the discontinuity of arbitrary constants which appear in divergent developments*, Cam. Phil. Trans. **X** (1857), no. 1, 105–128.

[58] Monica Ugaglia, *On a Poisson structure on the space of Stokes matrices*, Internat. Math. Res. Notices **9** (1999), 473–493, DOI 10.1155/S1073792899000240. MR1692595

[59] V. S. Varadarajan, *Linear meromorphic differential equations: a modern point of view*, Bull. Amer. Math. Soc. (N.S.) **33** (1996), no. 1, 1–42, DOI 10.1090/S0273-0979-96-00624-6. MR1339809

[60] A. Voros, *The return of the quartic oscillator: the complex WKB method* (English, with French summary), Ann. Inst. H. Poincaré Sect. A (N.S.) **39** (1983), no. 3, 211–338. MR729194

[61] Wolfgang Wasow, *Asymptotic expansions for ordinary differential equations*, Pure and Applied Mathematics, Vol. XIV, Interscience Publishers John Wiley & Sons, Inc., New York-London-Sydney, 1965. MR0203188

[62] G. N. Watson, *A Treatise on the Theory of Bessel Functions*, Cambridge University Press, Cambridge, England; The Macmillan Company, New York, 1944. MR0010746

Université de Paris and Sorbonne Université, CNRS, IMJ-PRG, F-75006 Paris, France
Email address: philip.boalch@imj-prg.fr