HAL open science

Theoretical and experimental study of various types of compensated dielectric bridges for millimeter-wave coplanar applications

Eric Rius, Jean-Philippe Coupez, Serge Toutain, Christian Person, P. Legaud

To cite this version:

Eric Rius, Jean-Philippe Coupez, Serge Toutain, Christian Person, P. Legaud. Theoretical and experimental study of various types of compensated dielectric bridges for millimeter-wave coplanar applications. IEEE Transactions on Microwave Theory and Techniques, 2000, 48 (1), pp.152-157. 10.1109/22.817484 . hal-02359055

HAL Id: hal-02359055

https://hal.science/hal-02359055

Submitted on 5 Apr 2022

HAL is a multi-disciplinary open access archive for the deposit and dissemination of scientific research documents, whether they are published or not. The documents may come from teaching and research institutions in France or abroad, or from public or private research centers.

L'archive ouverte pluridisciplinaire **HAL**, est destinée au dépôt et à la diffusion de documents scientifiques de niveau recherche, publiés ou non, émanant des établissements d'enseignement et de recherche français ou étrangers, des laboratoires publics ou privés.

Distributed under a Creative Commons Attribution - NonCommercial 4.0 International License

Theoretical and Experimental Study of Various Types of Compensated Dielectric Bridges for Millimeter-Wave Coplanar Applications

Eric Rius, Jean Philippe Coupez, Serge Toutain, Christian Person, and Pierre Legaud

***Abstract*—This paper describes a new approach for the integration of dielectric bridges in microwave-integrated-circuit uniplanar technology. Taking into account the electrical influence of these elements on a coplanar waveguide, a simple way to compensate these parasitic effects is presented. It consists of locally tuning the dimensions of both the bridges and associated compensation lines. Theoretical and experimental results on coplanar waveguides and T-junctions are given up to the millimeter frequency range. Finally, to validate the proposed technique, a bandpass filter including compensated dielectric bridges is implemented.**

***Index Terms*—Bandpass filters, coplanar transmission lines, millimeter-wave circuits.**

I. Introduction

Many studies have shown that the coplanar waveguide can be considered as a good alternative to microstrip lines in the millimeter frequency range [1]. However, there is one major drawback in dealing with coplanar design. The parasitic and strongly dispersive coupled slotline mode may be excited by nonsymmetrical coplanar-waveguide discontinuities, such as bends or T-junctions for example. As even and odd modes are fundamental modes for the coplanar waveguide, it is necessary to eliminate one of them, i.e., the coupled slotline mode. This is achieved by the insertion of bridges that enforce identical potential values on each side of the ground plane. Generally, bridges in microwave integrated circuits (MIC's) are implemented by thin metallic wires ($\phi \approx 25\ \mu$m), which are bonded to the ground planes. However, such an operation induces numerous problems in reproducibility and positioning, which deteriorate the circuit performances. Moreover, the mechanical fragility of such bridges does not guarantee circuit reliability.

In this paper, we present how these problems can be overcome by using a new multilayer uniplanar approach for bridges integration. Nevertheless, dielectric bridges appear as strong discontinuities on coplanar circuits, and must be compensated. Thus, we propose a way to reduce the parasitic influence of the bridges by locally tuning the dimensions of both the bridges and associated compensation lines. We then illustrate how this technique can be successfully applied to the millimeter functions design.

II. Thick-Film Multilayer Uniplanar Technology for Dielectric Bridges Integration

The multilayer uniplanar technology is built by dielectric layers deposition on a substrate using a thick-film technological process. The metallic layer is then directly screen-printed, or screen-printed

E. Rius, J. P. Coupez, and C. Person are with the Laboratoire d'Electronique et Systèmes de Télécommunications, 29285 Brest, France, and also with the Université de Bretagne Occidentale, 29285, Brest France, and the Ecole Nationale Superieure des Télécommunications de Bretagne, 29285 Bretagne, France.

S. Toutain was with the Laboratoire d'Electronique et Systèmes de Télécommunications, 29285 Brest, France. He is now with the Laboratoire des Systèmes Electronique et Informatique, 44306 Nantes, France.

P. Legaud is with the the Centre National d'Etudes des Télécommunication, 22302 Lannion, France.

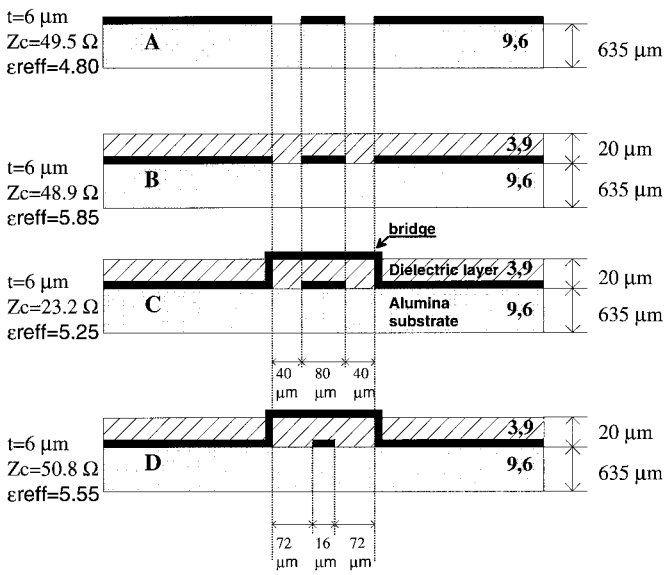

Fig. 1. Electrical parameters of the multilayer technology.

and etched, on the upper side of the dielectric layers. In our case, the dielectric material used is a photosensitive Heraeus ink (KQ 110) with a low-permittivity value equal to 3.9 and dielectric losses of 5×10^{-5} [2]. With this ink, low-loss propagation characteristics have been observed over a 1–50-GHz frequency band, with "on wafer" measurements, carried out on simple transmission lines. Finally, such a process enables us to obtain robust integrated bridges and eliminates possible problems in the positioning and reproducibility of these elements. In addition, it provides an easy control of bridge dimensions and shapes.

III. Parasitic Influence of the Dielectric Bridges

Due to the reduced height of the dielectric layers (typically between 10–20 µm for the MIC process used), an additional and significant capacitive parasitic coupling exists between the inner conductor of the coplanar waveguide and the upper short-circuited strip. Obviously, the characteristic impedance and effective permittivity of the basic coplanar waveguide are significantly modified in the bridge region. Taking into account the low dispersive characteristic of the coplanar technology, these variations can be calculated in a first approximation with a static finite-difference method [2]. In this study, bridges were modeled by an equivalent transmission line, taking into account the modified electrical parameters of this local multilayer structure. Fig. 1 shows the influence of the dielectric layer (B) and of the dielectric bridge (C) on the electrical parameters of a 50-Ω coplanar waveguide (A).

IV. Compensated Bridges Approach: "Low-Pass Filter" Concepts

To minimize the distortion due to the low characteristic impedance of the bridge discontinuity, it becomes possible to match the electrical parameters with those of the transmission line by locally reducing the inner conductor width under the bridge. Unfortunately, this method leads to obtaining very tiny strips and, consequently, increases technological constraints [see Fig. 1 (D)].

Our approach is to associate high characteristic impedances on each side of the bridge to compensate its equivalent low characteristic impedance [4]. This is achieved by reducing in an appropriate way the width of both the center conductor under the bridge and the lines of length (D) on each side of it. Thus, by adjusting (D), it becomes possible to transform the bridge into an equivalent low-pass filter structure (T model) with a very high cutoff frequency. This is explained by the low L–C values model, shown in Fig. 2 (A-type

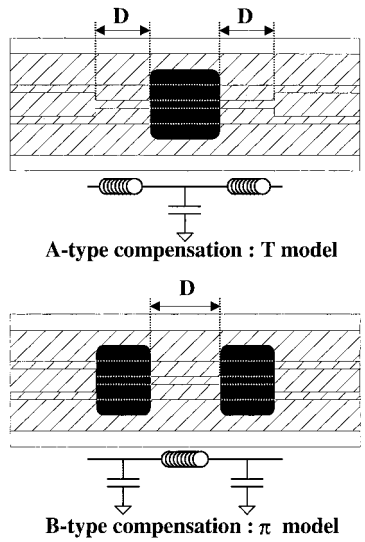

Fig. 2. "Low-pass filter" concepts.

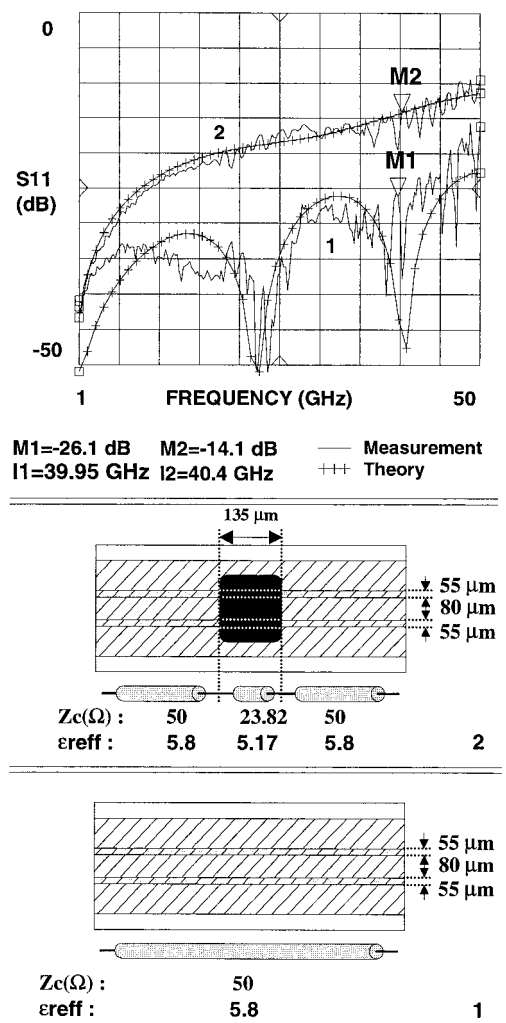

Fig. 3. Influence of a bridge on a transmission line.

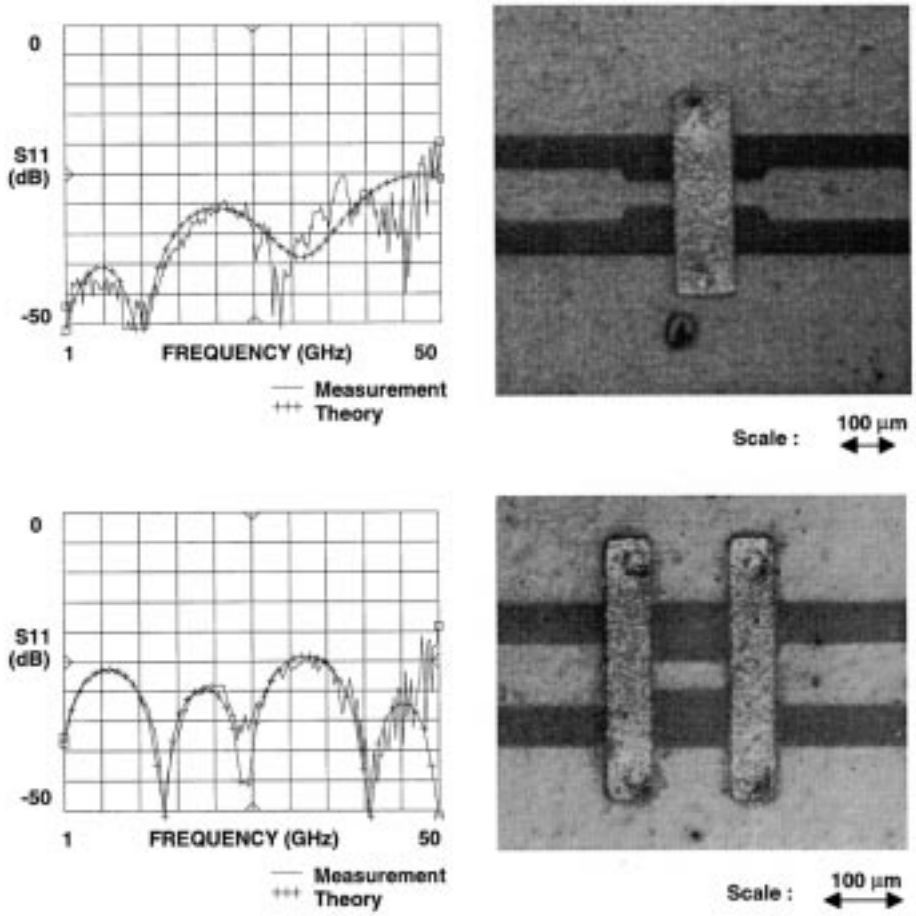

Fig. 4. A-type compensation and B-type compensation.

compensation). Based on a similar approach, the structure composed of two bridges separated by an inductive compensation element can be also realized. A low-pass filter with a π model is obtained in this case (Fig. 2: B-type compensation). The main advantage of this type of structure lies in the reduction of technological constraints: indeed, it neither requires very tiny strips nor a very precise positioning of the bridge. To validate these concepts, many different dielectric bridges configurations (with and without compensations) on 50-Ω coplanar waveguides have been built on an alumina substrate ($\varepsilon r = 9.6$, thickness $= 635$ µm). Relatively high values of the dielectric bridges lengths have been chosen especially to increase their parasitic effect on the coplanar waveguides and then to illustrate the compensation technique efficiency. "On wafer" measurements have been carried out on these structures over the 1–50 GHz frequency band. In Fig. 3, curve 1 represents return losses of a simple 50-Ω multilayer coplanar waveguide and curve 2 corresponds to the case of a similar transmission line with a 135-µm-long bridge. In this case, it should be noted that the performances strongly deteriorates. As illustrated in Fig. 4, the two types of compensation yield acceptable return losses. Moreover, the compensation technique does not produce significantly additional insertion losses.

V. Compensated Bridges and Junctions

Preliminary measurements were made to verify the integrated bridges efficiency in suppressing the parasitic mode on different types of discontinuities and to verify the effect of the compensation technique. For instance, Fig. 5 shows experimental results of an asymmetric short-circuited stub (theoretically, a 30-GHz resonator). The dielectric bridges modify the electrical performances of the resonator, its response is shifted to a lower frequency (20 GHz). Thus, by using a compensation technique, the resonant frequency is corrected to the required value.

VI. Application to Millimeter-Wave Bandpass Filters

Finally, to validate the above compensated bridges concepts, we designed basic microwave functions such as filters that use integrated bridges. For instance, Fig. 6 deals with a classical short-circuited stubs bandpass filter [5] integrated by using a multilayer technology. In this case, bridges are thus compensated. To illustrate the flexibility of the compensation technique, two different filter prototypes were tested. A first prototype (A) uses, for example, a 60-µm-long bridge on the central resonator. The compensation of the second prototype (B) was determined in relation with the 100-µm bridge located on this central resonator. Indeed, the bridges dimension, for instance, is not critical because it is always possible to modify their lengths by adjusting the associated compensation. For the two filters, the frequency responses are identical. We only present in Fig. 6 the measurements relative to the second prototype (B). Experimental results are in agreement in both magnitude and phase with the desired response. Some discrepancies appear at high frequencies (between 40–50 GHz), but they are due to calibration errors during the measurements.

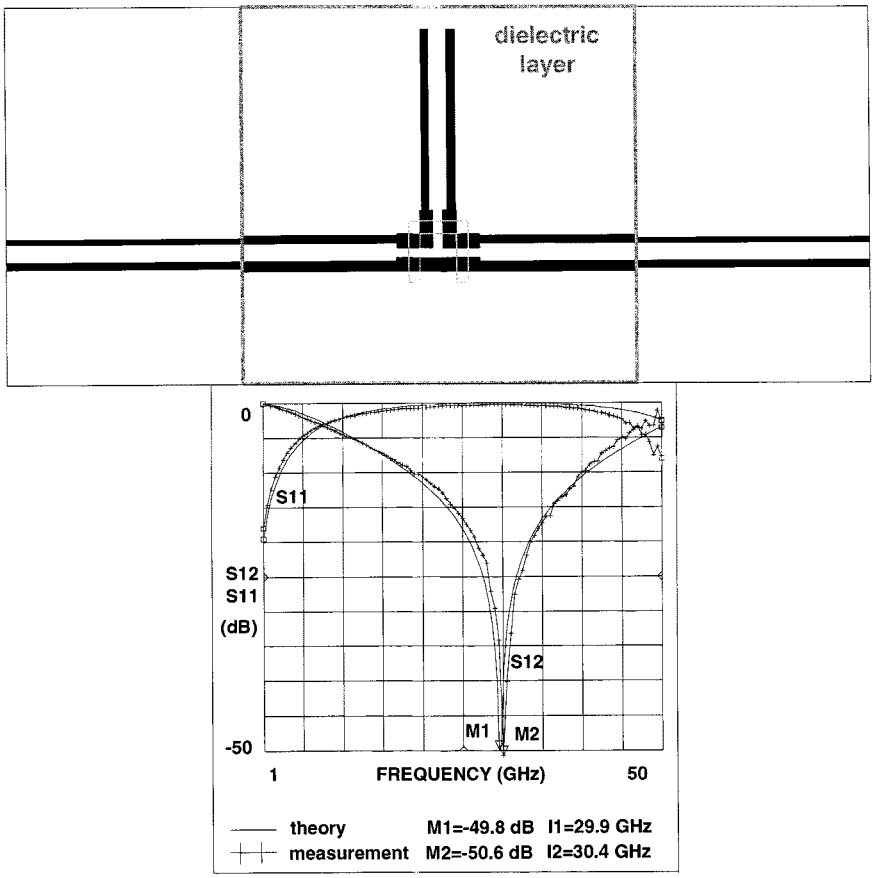

Fig. 5. Compensation technique on discontinuities.

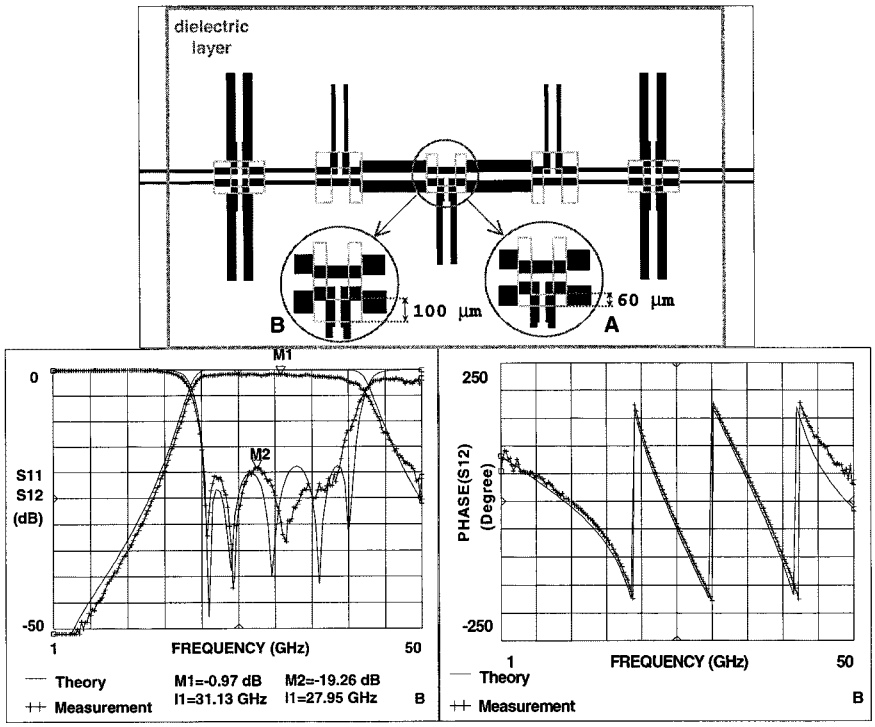

Fig. 6. Experimental and theoretical results on a compensated multilayer coplanar bandpass filter.

VII. Conclusion

Compared to the classical uniplanar technology, one main advantage of the multilayer uniplanar technology is to provide robust and reproducible integrated bridges. Indeed, with this new technology it becomes possible to control both the shape and dimensions of bridges. Thus, it is easier to model their parasitic effects on the fundamental propagation mode. Furthermore, a broad-band compensation technique has been developed and successfully applied to optimize the bridges integration on a coplanar structure. The fair agreement between theoretical and experimental results on millimeter-wave filter structures, for example, shows that a static analysis coupled with a transmission-line approach is sufficient up to 50 GHz. Consequently, this method can be very easily included in commercial computer-aided design (CAD) softwares.

Acknowledgment

The authors thank the CNET, Lannion, France, for providing "on wafer" measurements and Prof. M. Ney for his helpful suggestions.

References

[1] M. Houdart, "Coplanar lines: Application to broadband microwave integrated circuits," in *7th EuMC Dig.*, Prague, Czech Republic, 1976, pp. 49–53.

[2] P. Barnwell and G. Shorthouse, "High performance material technologies for advanced circuit assemblies and MCMs," *Microelectron. Int. J. ISHM Europe*, no. 38, pp. 28–31, Sept. 1995.

[3] M. Naghed and I. Wolff, "Equivalent capacitances of coplanar waveguide discontinuities and interdigited capacitors using a three-dimensional finite difference method," *IEEE Trans. Microwave Theory Tech.*, vol. 38, pp. 1808–1815, Dec. 1990.

[4] L. Stephan, J. P. Coupez, E. Rius, C. Person, and S. Toutain, "Integration of various types of compensated dielectric bridges for mm coplanar applications," in *IEEE MTT-S Int. Microwave Symp. Dig.*, San Francisco, CA, 1996, pp. 83–86.

[5] G. L. Matthaei, L. Young, and E. M. T. Jones, *Microwave Filters, Impedance-Matching Networks and Coupling Structures*. Norwood, MA: Artech House, 1980, sec. 10.03, pp. 595–605.