HAL
open science

Hyperpolarization of Nitrogen-15 Nuclei by Cross Polarization and Dissolution Dynamic Nuclear Polarization

Jonas Milani, Basile Vuichoud, Aurélien Bornet, Roberto Melzi, Sami Jannin, Geoffrey Bodenhausen

To cite this version:

Jonas Milani, Basile Vuichoud, Aurélien Bornet, Roberto Melzi, Sami Jannin, et al.. Hyperpolarization of Nitrogen-15 Nuclei by Cross Polarization and Dissolution Dynamic Nuclear Polarization. Review of Scientific Instruments, 2017, 88 (1), pp.015109. 10.1063/1.4973777 . hal-02320893

HAL Id: hal-02320893

https://hal.science/hal-02320893v1

Submitted on 19 Oct 2019

HAL is a multi-disciplinary open access archive for the deposit and dissemination of scientific research documents, whether they are published or not. The documents may come from teaching and research institutions in France or abroad, or from public or private research centers.

L'archive ouverte pluridisciplinaire **HAL**, est destinée au dépôt et à la diffusion de documents scientifiques de niveau recherche, publiés ou non, émanant des établissements d'enseignement et de recherche français ou étrangers, des laboratoires publics ou privés.

Hyperpolarization of Nitrogen-15 Nuclei by Cross Polarization and Dissolution Dynamic Nuclear Polarization

Jonas Milani[1], Basile Vuichoud[1], Aurélien Bornet[1], Roberto Melzi[2], Sami Jannin[1,3], and Geoffrey Bodenhausen[1,4,5,6]*

[1] *Institut des Sciences et Ingénierie Chimiques, Ecole Polytechnique Fédérale de Lausanne (EPFL), Batochime, CH-1015 Lausanne, Switzerland.*

[2] *Bruker Italia S.r.l. Viale V. Lancetti 43, 20158 Milano, Italy.*

[3] *Bruker BioSpin AG, Industriestrasse 26, 8117 Fällanden, Switzerland*

[4] *Département de Chimie, Ecole Normale Supérieure, 24 Rue Lhomond, 75231 Paris Cedex 05, France.*

[5] *Université Pierre-et-Marie Curie, Paris, France.*

[6] *UMR 7203, CNRS/UPMC/ENS, Paris, France*

To be re-submitted to Rev. Sci. Instrum.

* Corresponding author: jonas.milani@epfl.ch

Abstract

Dynamic Nuclear Polarization (DNP) is often achieved by *direct* transfer of polarization from electrons to nuclei such as ^{13}C, induced by microwave saturation of the wings of narrow EPR lines of radicals like trityl. In the *indirect* approach on the other hand, DNP is used to transfer the polarization from the electrons of radicals such as nitroxides that have broad EPR lines to nuclear spins $I = {}^{1}H$, followed by cross-polarization (CP) from $I = {}^{1}H$ to $S = {}^{13}C$ or other nuclei with low gyromagnetic ratios. This approach is particularly attractive for $S = {}^{15}N$, since direct DNP yields modest polarizations $P({}^{15}N) < 4\%$ with build-up times that can be as long as $\tau_{DNP}({}^{15}N) > 2$ hours. In this paper we show that CP from ^{1}H to ^{15}N at 1.2 K can yield $P({}^{15}N) = 25\%$ with $\tau_{CP\text{-}DNP}({}^{15}N) = 10\text{-}15$ min. After rapid dissolution and transfer to a solution-state NMR spectrometer, a polarization $P({}^{15}N) = 20\%$ was observed at 300 K. The longitudinal relaxation times in solution can be as long as $T_1({}^{15}N) > 800$ s in favorable cases.

Introduction

Dissolution dynamic nuclear polarization (d-DNP) [1] allows one to enhance NMR signals in solution by more than four orders of magnitude compared to thermal equilibrium. Most applications to metabolic imaging exploit the enhancement of carbon-13 nuclei, [2], but nitrogen-15 has also been successfully enhanced by d-DNP [3-6]. In small molecules where ^{15}N is bound to protons, $T_1(^{15}\mathrm{N})$ is typically on the order of 60 s; but when ^{15}N is not directly bound to any protons, very long relaxation times $200 < T_1(^{15}\mathrm{N}) < 800$ s have been observed near 300 K [5]. This makes d-DNP particularly attractive for nitrogen-15. Early studies of ^{15}N d-DNP report a modest efficiency of direct ^{15}N DNP when using trityl or nitroxide radicals, resulting in disappointing polarizations $P(^{15}\mathrm{N}) < 4\%$ [5] and exceedingly long build-up times, typically $\tau_{\mathrm{DNP}}(^{15}\mathrm{N}) > 2$ hours. Building on our recent work on low temperature cross-polarization (CP) to carbon-13 under d-DNP conditions [7-9], we have extended the method to nitrogen-15 and we have achieved polarization levels on the order of $P(^{15}\mathrm{N}) = 20$ % at 1.2 K and 6.7 T with short build-up times $\tau_{\mathrm{CP\text{-}DNP}}(^{15}\mathrm{N}) \approx 10\text{-}15$ min .

Experimental design

We have designed and built a novel CP-DNP probe for cross-polarization from ^{1}H to ^{15}N at 6.7 T and 1.2 K compatible with our home-built d-DNP polarizer [10, 11]. The probe can accommodate a sample insertion stick with a sample holder in a cavity where both DNP and CP can be performed simultaneously with suitable microwave and radiofrequency irradiation. The probe design is shown in Fig. 1. After CP-DNP, a dissolution stick can be is inserted to rapidly dissolve the sample to yield a hyperpolarized injectable solution. The Q factors and 90° pulse lengths were measured for both channels at 4.2 K (Table 1.) The probe has been optimized for $B_0 = 6.7$ T, with microwave irradiation near 188 GHz, and for CP with Larmor frequencies $\nu(^{1}\mathrm{H}) = 285.2$ MHz and $\nu(^{15}\mathrm{N}) = 28.9$ MHz, using an adiabatic multiple-contact pulse sequence described elsewhere for ^{13}C [9]. Fig 2 describe the setup of the two perpendicular channel used for CP-DNP experiments.

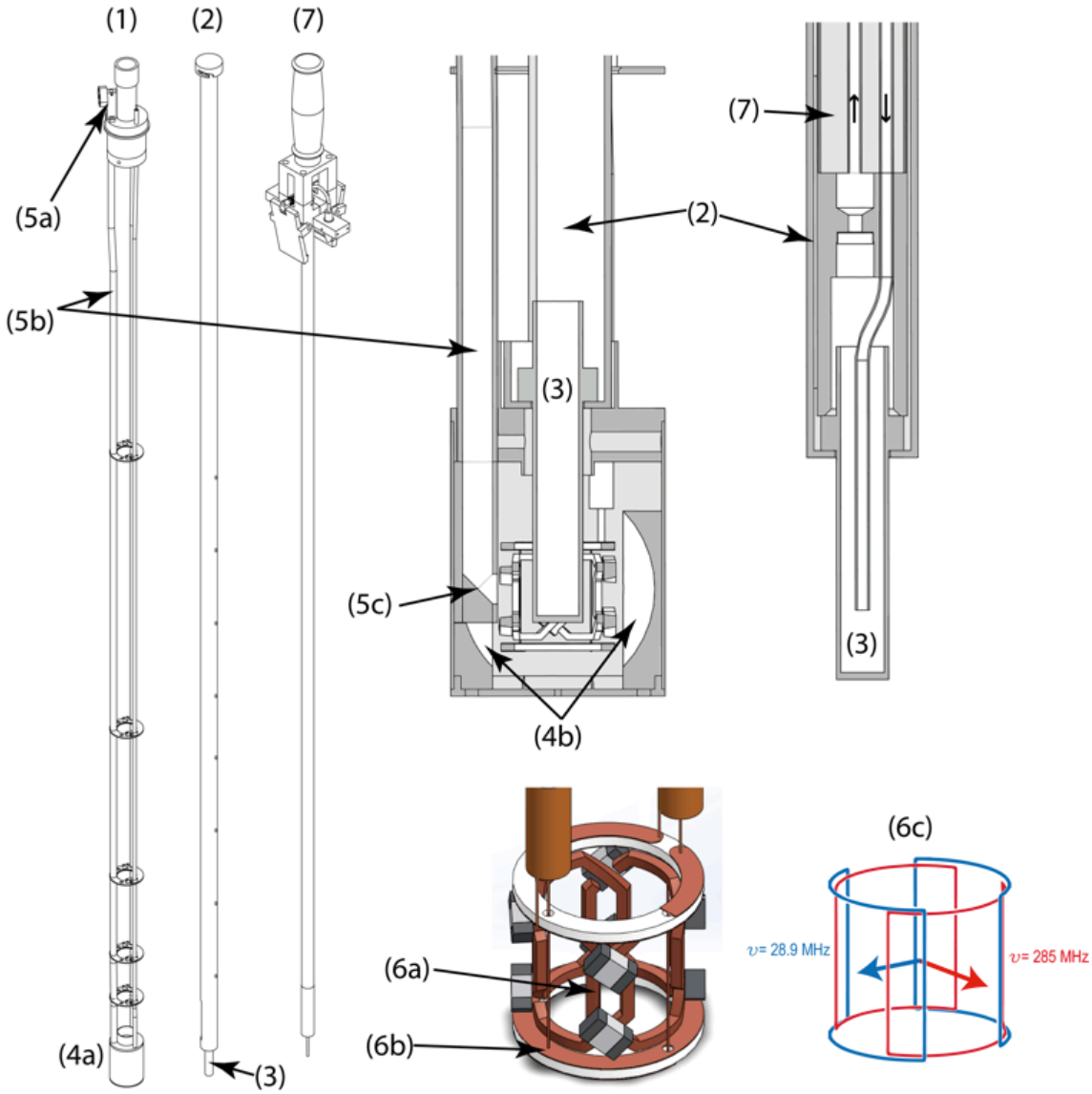

Figure 1 The DNP probe comprises (1) a brass probe body that fits into the cryostat (cold bore with 45 mm inner diameter) and accommodates (2) a sample insertion stick made of G10 fiberglass that supports (3) a VESPEL sample holder. The gold-plated brass cavity (4a) is equipped with (4b) two concentric mirrors to focus the microwave field onto the sample. The 188 GHz microwaves are guided towards the sample through (5a) a 90° miter bend, followed by (5b) an oversized circular waveguide (5 mm inner diameter, 1.1 m long), terminated by (5c) another 90° miter bend. The RF coils are made of a pair of concentrically mounted perpendicular outer coils (6b) that are inductively coupled with a pair of inner coils (6a). A schematic view of the inner coils is shown in (6c). After CP-DNP, a dissolution stick (7) can be used to inject hot water to melt the sample and push the liquid hyperpolarized solution to an NMR or MRI system.

	^{1}H channel (285.25 MHz)	^{15}N channel (28.91 MHz)
Q factor	197.0	136.7
90° pulse	6 µs with 50 W	10 µs with 200 W

Table 1 Parameters of the resonant circuits for ^{1}H and ^{15}N of the DNP probe at 4.2 K and 6.7 T.

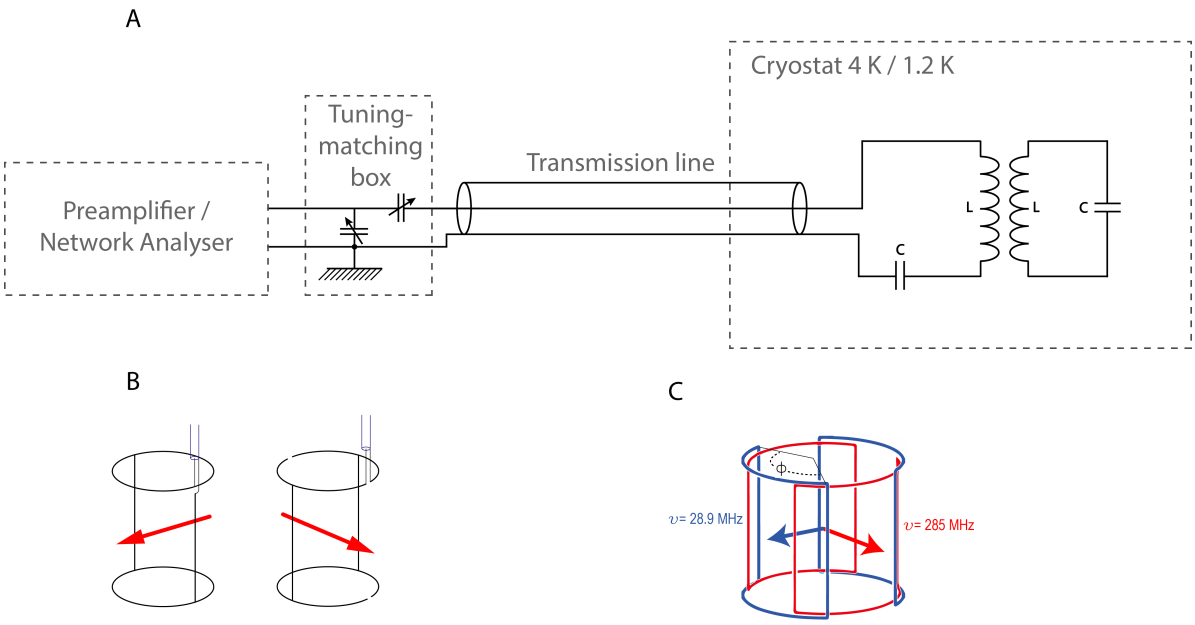

Figure 2 (A) Schematic representation of one of the two channels, composed of two inductively coupled coils. A transmission line of about 1.2 m length connects the top of the probe to the cavity in the cryostat. (B) The two perpendicular outer coils are printed on PCB foils and connected by copper wires to the external tuning and matching boxes. (C) The two concentric inductively coupled inner saddle coils have an opening angle of 120° to optimize the B_1 field in the sample space.

Samples

Five samples of 100 µl each were tested, consisting of 0.8 M solutions of one of the following molecules: ammonium chloride, urea, glycine and trimethylphenylammonium (TMPA), all ^{15}N-enriched, and choline in natural ^{15}N abundance (0.36 %), dissolved in a d_6-DMSO/D_2O (60/40 v/v) glass-forming mixture doped with 50 mM TEMPOL radicals. Such samples can lead to a large ^{1}H polarization $P(^{1}\mathrm{H})$ = 60-90% with short build-up times τ_{DNP} = 2 min at 1.2 K. CP contacts were repeated at intervals of 3 min, leading to final polarizations $P(^{15}\mathrm{N})$ = 17-25% with apparent build-up times $\tau_{\mathrm{CP\text{-}DNP}}$ = 7-16 min. Fig. 3 shows the DNP build-up curves with and without CP of the four ^{15}N-labelled compounds, and Table 2 shows the maximum polarizations achieved with and without CP,

i.e., $P(^{15}N)^{CP}$ and $P(^{15}N)^{direct}$, and their associated apparent build-up times $\tau_{CP\text{-}DNP}(^{15}N)^{CP}$ and $\tau_{DNP}(^{15}N)^{direct}$. From these parameters, we determined amplification and acceleration factors brought about by CP, $\varepsilon_{CP} = P(^{15}N)^{CP}/P(^{15}N)^{direct}$ and $\kappa_{CP} = \tau_{DNP}(^{15}N)^{direct}/\tau_{DNP}(^{15}N)^{CP}$ respectively. For Glycine, we could not determine the thermal equilibrium polarization, but we could nevertheless determine ε_{CP} and κ_{CP}.

	$P(^{15}N)^{CP}$	$\tau_{CP\text{-}DNP}(^{15}N)^{CP}$	$P(^{15}N)^{direct}$	$\tau_{DNP}(^{15}N)^{direct}$	$\varepsilon_{CP} = P^{CP}/P^{direct}$	$\kappa_{CP} = \tau_{DNP}{}^{direct}/\tau_{DNP}{}^{CP}$
Ammonium	17 ± 2.6 %	15.9 ± 1.2 min	2.3 ± 2.6 %	27.4 ± 4.5 min	7.4 ± 0.2	1.72 ± 0.4
Urea	23 ± 1.8 %	7.6 ± 0.5 min	1.4 ± 1.8 %	43.9 ± 1.8 min	16.4 ± 0.2	5.8 ± 0.6
TMPA	25 ± 2.0 %	12.7 ± 0.5 min	0.7 ± 2.0 %	43.5 ± 8.6 min	35.7 ± 0.6	3.4 ± 0.8
Glycine	N.A	7.6 ± 0.4 min	N.A	25 ± 2.2 min	21.5 ± 1.6	3.2 ± 0.5

Table 2 : Indirect polarizations assisted by CP and direct polarizations with their associated build-up times, amplification and acceleration factors, measured at 1.2 K in ^{15}N-enriched ammonium, urea, TMPA and glycine solutions in d_6-DMSO/D_2O (60/40 v/v) with 50 mM TEMPOL.

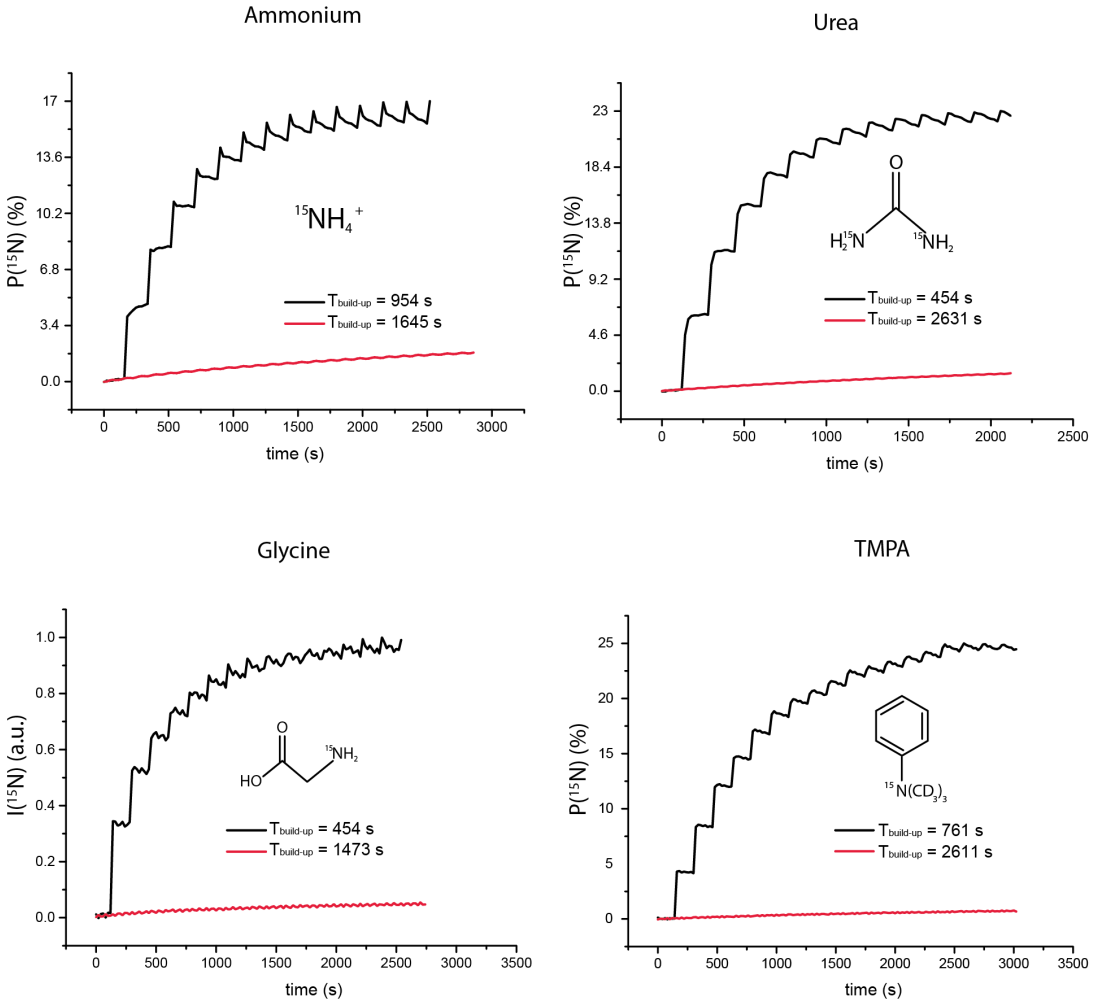

Figure 3. Build-up of the polarization $P(^{15}N)$ measured at 1.2 K and 6.7 T in 75 % deuterated ammonium, urea, glycine and TMPA in d_6-DMSO/D_2O/H_2O (60/30/10 v/v) with 50 mM TEMPOL, assisted by multiple-contact CP (black lines) and by direct DNP without CP (red lines).

CP optimization

The CP sequence used in our study consists of two adiabatic inversions of the magnetization synchronized on both NMR channels, as previously described. The nutation frequencies of the *I* and *S* spins in the doubly rotating frame are equal to fulfill the Hartmann-Hahn condition (7). The length of the CP contact pulses is optimized to balance polarization transfer and $T_{1\rho}$ relaxation. This pulse length obviously depends of the magnitude of the ^{1}H-^{15}N dipole-dipole (DD) coupling. The best pulse lengths for glycine, urea and TMPA are shown in Fig. 4.

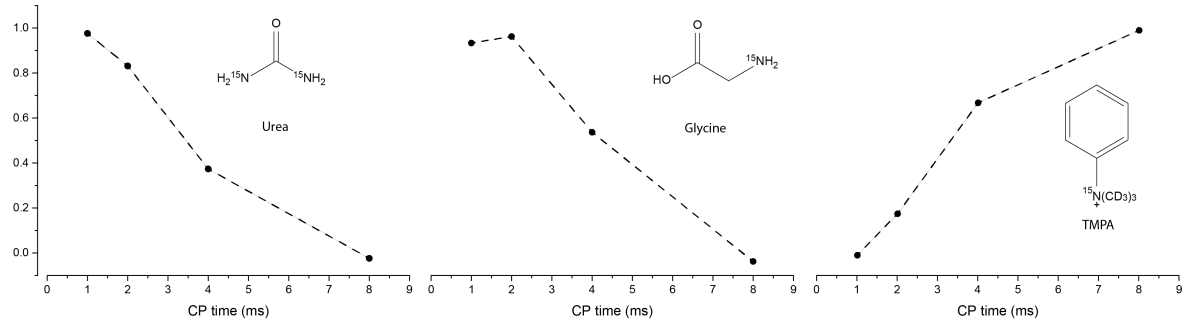

Figure 4. The optimum duration of the CP contact depends on the strength of the ^{1}H-^{15}N dipole-dipole (DD) couplings. Strong couplings occur in urea and glycine where protons are only one or two bonds away from ^{15}N, respectively, so that short contact pulses of 1 or 2 ms are found to be optimal. Conversely, for TMPA where the protons are three bonds away from ^{15}N, contact pulses of 8 ms are optimal (longer pulses are not recommended to avoid arching).

Solution-state NMR at 300 K

After CP-DNP, when the polarization had reached a maximum, 5 ml of hot deuterated water at 453 K (180°C) pressurized at 1 MPa (10 bar) was injected to dissolve the frozen samples. Deuterated solvents are preferred for dissolution to attenuate relaxation due to dipolar couplings between protons, especially when protons are polarized. He gas at 6.10^5 Pa (6 bar) was used to push the solution though a 1.5 mm inner diameter PTFE tube of 5 m length. This tube was enclosed in a magnetic tunnel [12] and connected to an 11.7 T NMR spectrometer (51 MHz for ^{15}N, 500 MHz for protons) with a standard 5 mm NMR sample tube. The transfer time was 5 s and the injection after 2 s used a homemade injector. A 5° pulse was applied every 10 s to measure the decaying hyperpolarized ^{15}N signals. Polarizations and relaxation times measured for glycine, ammonium, urea, choline and TMPA in natural abundance after dissolution are shown in Table 3. The hyperpolarized liquid-state spectra of ^{15}N-enriched TMPA and Urea are shown in Fig. 5. It is possible to record hyperpolarized ^{15}N spectra of non-enriched samples in a single scan, as shown for Choline in Fig. 6. One advantage is that $T_1(^{15}\mathrm{N})$ is quite long in solution, so that the polarization $P(^{15}\mathrm{N})$ can be preserved for prolonged periods. The magnetization can then be transferred from ^{15}N to ^{1}H by a reverse INEPT sequence.

	$P(^{15}\mathrm{N})$ (%)	$T_1(^{15}\mathrm{N})$ (s)
Glycine*	> 6.0	35 ± 1
Ammonium	> 7.1	39 ± 2
Urea	19.2 ± 3	197 ± 4

Choline	(a)	233 ± 21
TMPA	16.8 ± 2	750 ± 12

Table 3. Polarization $P(^{15}N)$ in 32 mM solutions of various samples with isotopic ^{15}N enrichment after dissolution, measured at 51 MHz (11.7 T) and 300 K. (a) The thermal polarization and hence $P(^{15}N)$ could not be determined because of poor sensitivity. (*) Glycine was measured at pH > 8.

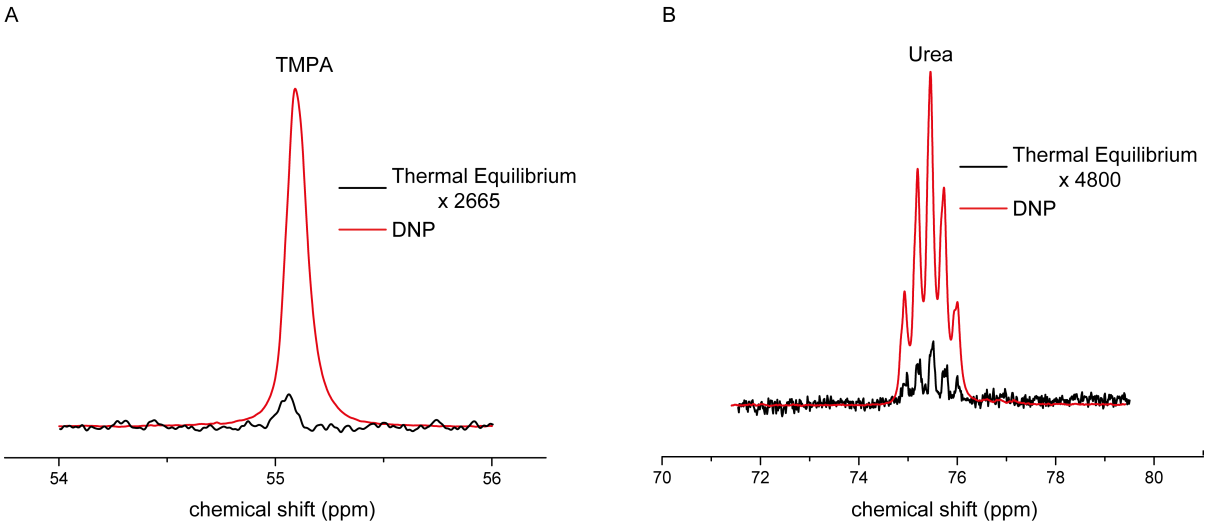

Figure 5. (A) ^{15}N-spectrum of ^{15}N-enriched of trimethylphenylammonium chloride $(CD_3)_3NC_6H_5Cl$ (TMPA) observed in solution at 51 MHz (11.7 T, 500 MHz for protons) in a single scan with a 5° pulse immediately after D-DNP (red line) and after complete return to thermal equilibrium overnight, by accumulating 128 transients with 5° pulses at 600 s intervals in 24 hours (black line). The hyperpolarization $P(^{15}N)$ = 16.8 % was determined by comparing with the thermal equilibrium signal. The singlet results from the isolated ^{15}N in TMPA. (B) ^{15}N-spectrum of ^{15}N-enriched Urea (ND_2COND_2) observed in solution at 28.91 MHz immediately after D-DNP (red line), and after complete return to thermal equilibrium overnight, by accumulating 300 measurements with 5° pulses at 600 s intervals in 62 hours (2.6 days) (black line). The hyperpolarization was found to be $P(^{15}N)$ = 19.2 %. The 1:2:3:2.1 multiplet is due to $^1J(^{15}N, ^2D)$ = 14 Hz couplings with two deuterium nuclei which exchange with the solvent, since the molecule is completely deuterated after dissolution with D_2O.

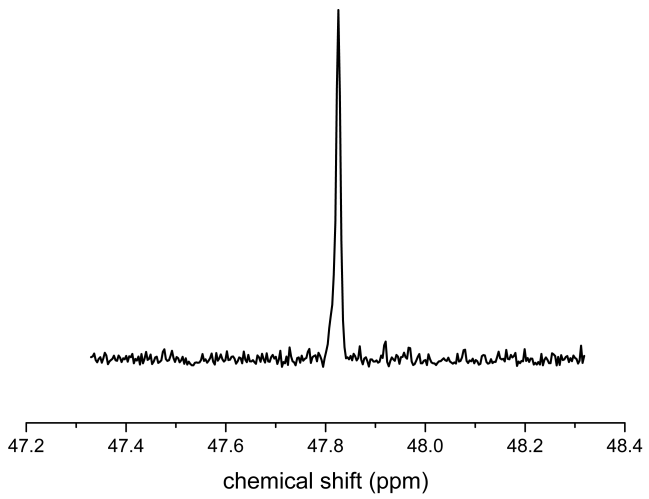

Figure 6. Proton-decoupled ^{15}N spectrum of solution of 0.12 M Choline ($NH_4^+CH_2CH_2Cl^-$) in D_2O with 0.36% natural abundance observed at 51 MHz (11.7 T, 500 MHz for protons) with a 5° pulse immediately after D-DNP.

Conclusions

Using DNP of protons by saturating the electrons of TEMPOL, followed by cross polarization from ^1H to ^{15}N, one can achieve remarkably high polarizations up to $P(^{15}N)$ = 25% with a short build-up time constant $\tau_{CP\text{-}DNP}(^{15}N)$ = 7-16 min, using a simple custom-built CP-DNP probe described herein. Such high levels of polarization were never attained before. The resulting high NMR sensitivity associated with the long relaxation times $T_1(^{15}N)$ observed in several compounds in solution makes nitrogen-15 an interesting candidate for hyperpolarization studies.

References

1. Ardenkjaer-Larsen, J.H.; Fridlund, B.; Gram, A.; Hansson, G.; Hansson, L.; Lerche, M.H.; Servin, R.; Thaning, M.; Golman, K. *Proc Natl Acad Sci U S A*, **2003**, 100(18),10158-63.
2. Golman, K.; Zandt, R.I.; Lerche, M.; Pehrson, R.; Ardenkjaer-Larsen, J.H. *Cancer Res*, **2006**, 66(22),10855-60.
3. Sarkar, R.; Comment, A.; Vasos, P.R.; Jannin, S.; Gruetter, R.; Bodenhausen, G.; Hall, H.; Kirik, D.; Denisov, V.P. *J. Am. Chem. Soc.*, **2009**, 131(44),16014.
4. Kuzma, N.N.; Hakansson, P.; Pourfathi, M.; Ghosh, R.K.; Kara, H.; Kadlecek, S.J.; Pileio, G.; Levitt, M.H.; Rizi, R.R. *J. Magn. Reson.*, **2013**, 234,90-94.
5. Nonaka, H.; Hata, R.; Doura, T.; Nishihara, T.; Kumagai, K.; Akakabe, M.; Tsuda, M.; Ichikawa, K.; Sando, S. *Nat Commun*, **2013**, 4,2411.
6. Cudalbu, C.; Comment, A.; Kurdzesau, F.; van Heeswijk, R.B.; Uffmann, K.; Jannin, S.; Denisov, V.; Kirik, D.; Gruetter, R. *Phys Chem Chem Phys*, **2010**, 12(22),5818-23.
7. Bornet, A.; Jannin, S.; Bodenhausen, G. *Chem. Phys. Letters*, **2011**, 512(4-6),151-154.
8. Bornet, A.; Melzi, R.; Jannin, S.; Bodenhausen, G. *Applied Magn. Reson.*, **2012**, 43(1-2),107-117.
9. Jannin, S.; Bornet, A.; Melzi, R.; Bodenhausen, G. *Chem. Phys. Letters*, **2012**, 549,99-102.
10. Bornet, A.; Melzi, R.; Linde, A.J.P.; Hautle, P.; van den Brandt, B.; Jannin, S.; Bodenhausen, G. *J. Phys. Chem. Letters*, **2013**, 4(1),111-114.
11. Comment, A.; van den Brandt, B.; Uffmann, K.; Kurdzesau, F.; Jannin, S.; Konter, J.A.; Hautle, P.; Wenckebach, W.T.H.; Gruetter, R.; van der Klink, J.J. *Concepts Magn. Reson. Part B-Magnetic Resonance Engineering*, **2007**, 31B(4),255-269.
12. Milani, J.; Vuichoud, B.; Bornet, A.; Mieville, P.; Mottier, R.; Jannin, S.; Bodenhausen, G. *Rev. Scientif. Instrum.*, **2015**, 86(2).