HAL open science

Dynamical behavior of a nondiffusive scheme for the advection equation

Nina Aguillon, Pierre-Antoine Guiheneuf

To cite this version:

Nina Aguillon, Pierre-Antoine Guiheneuf. Dynamical behavior of a nondiffusive scheme for the advection equation. Confluentes Mathematici, 2020, 12 (1), pp.3-29. hal-02304798v2

HAL Id: hal-02304798

https://hal.science/hal-02304798v2

Submitted on 13 Jul 2020

HAL is a multi-disciplinary open access archive for the deposit and dissemination of scientific research documents, whether they are published or not. The documents may come from teaching and research institutions in France or abroad, or from public or private research centers.

L'archive ouverte pluridisciplinaire **HAL**, est destinée au dépôt et à la diffusion de documents scientifiques de niveau recherche, publiés ou non, émanant des établissements d'enseignement et de recherche français ou étrangers, des laboratoires publics ou privés.

DYNAMICAL BEHAVIOR OF A NONDIFFUSIVE SCHEME FOR THE ADVECTION EQUATION

by

Nina Aguillon & Pierre-Antoine Guihéneuf

Abstract. — We study the long time behaviour of a dynamical system strongly linked to the nondiffusive scheme of Després and Lagoutiere for the 1-dimensional transport equation. This scheme is nondiffusive in the sense that discontinuities are not smoothened out through time. Numerical simulations indicate that the scheme error is uniformly bounded with time. We prove that this scheme is overcompressive when the Courant–Friedrichs–Levy number is 1/2: when the initial data is nondecreasing, the approximate solution becomes a Heaviside function. In a special case, we also understand how plateaus are formed in the solution and their stability, a distinctive feature of the Després and Lagoutière scheme.

Contents

1. Introduction 1
2. Numerical simulations 10
3. The symmetric case of a half cell shift 13
4. The non symmetric case $\lambda \neq 1/2$ 20
Appendix A. Decomposition of the initial data 23
Appendix B. Half infinite staircase with steps of equal heights 25
References 27

1. Introduction

1.1. Upwind and Després-Lagoutière schemes. — The numerical approximation of the solution to the 1-dimensional transport equation with a constant velocity $V > 0$ has received a lot of attention for a long time, and still continues to do. One of the reason is that this equation, namely

$$\begin{cases} \partial_t u(t,x) + V\partial_x u(t,x) = 0 & \forall t > 0,\ \forall x \in \mathbf{R} \\ u(0,x) = u^0(x) & \forall x \in \mathbf{R} \end{cases} \tag{1}$$

is very simple and well understood, and is at the same time a fundamental example in the much larger class of conservation laws. In the multidimensional setting with space and time dependent velocity fields V, (1) is important for practical applications, as it

represents the passive advection of the quantity u. For this class of equations it is of crucial importance to have reliable and accurate numerical schemes, able to capture the exact solution $u(t,x) = u^0(x - Vt)$ of (1), even when u^0 is discontinuous.

One of the simplest schemes to approximate (1) is the so-called upwind scheme. Fixed time step $\Delta t > 0$ and space step $\Delta x > 0$ are given, and the real line $\mathbf{R}$ is separated in intervals of size Δx, with midpoints $x_j = j\Delta x$, and left extremity $x_{j-1/2} = x_j - \frac{\Delta x}{2}$. The scheme is initialized with $u_j^0 = u^0(x_j)$ if u^0 is $\mathcal{C}^1$-regular or with

$$u_j^0 = \frac{1}{\Delta x}\int_{x_{j-1/2}}^{x_{j+1/2}} u^0(x)dx \tag{2}$$

when u^0 only has bounded variations. The approximate solution $(u_j^{n+1})_{j\in\mathbf{Z}}$ at time $(n+1)\Delta t$ is obtained from $(u_j^n)_{j\in\mathbf{Z}}$, the approximate solution at time $n\Delta t$, by

$$\frac{u_j^{n+1} - u_j^n}{\Delta t} + V\frac{u_j^n - u_{j-1}^n}{\Delta x} = 0, \qquad \forall j \in \mathbf{Z},\ \forall n \in \mathbf{N}. \tag{3}$$

An interpretation is the following. At time $n\Delta t$, define a piecewise constant function by

$$u_{\Delta x}^n(x) = u_j^n \ \text{ if } x \in \left[x_{j-1/2}, x_{j+1/2}\right).$$

Translate it to the right of a distance $V\Delta t$, i.e. consider v the exact solution of (1) at time Δt, with initial data $u_{\Delta x}^n$. If the solution does not cross more than a cell, namely if $V\Delta t < \Delta x$, then

$$\begin{aligned}\int_{x_{j-1/2}}^{x_{j+1/2}} v(x)dx &= \int_{x_{j-1/2}}^{x_{j+1/2}} u_{\Delta x}^n(x - V\Delta t)dx \\ &= V\Delta t\, u_{j-1}^n + (\Delta x - V\Delta t)u_j^n = \Delta x\, u_j^{n+1}.\end{aligned}$$

Hence, the upwind scheme amounts to computing the cell average of the exact solution for the initial condition $u_n\,\Delta x$ and at time Δt.

It is possible to prove that the resulting scheme converges towards the exact solution.

Proposition 1. — *Suppose that the Courant–Friedrichs–Levy number $\frac{V\Delta t}{\Delta x}$ is fixed in the interval $(0,1)$, and denute by u the exact solution of (1).*

- *If u^0 is $\mathcal{C}^2$-regular and with the initialization $u_j^0 = u^0(x_j)$, there exists a constant C such that*

$$\forall n \in \mathbf{N}, \qquad \sup_{j\in\mathbf{Z}} \left|u_j^n - u(n\Delta t, x_j)\right| \le Cn\Delta t\Delta x.$$

- *If u^0 has bounded variations and with the initialization (2), there exists a constant C such that*

$$\forall n \in \mathbf{N}, \qquad \Delta x \sum_{j\in\mathbf{Z}} \left| u_j^n - \frac{1}{\Delta x}\int_{x_{j-1/2}}^{x_{j+1/2}} u(n\Delta t, x)dx \right| \le C\sqrt{n\Delta t\Delta x}.$$

This theorem means that *if the final time $T = n\Delta t$ is fixed* and if Δt and Δx both tend to zero by keeping the ratio $\frac{V\Delta t}{\Delta x}$ fixed and smaller than 1, then the approximate solution converges towards the exact solution at rate 1 or 1/2 (depending on the

regularity of u^0), for the L^∞ and L^1 norm respectively. The error in time grows as T or $\sqrt{T}$.

A considerable effort has been made over the last decades to improve the rate of convergence. For linear schemes, estimates like

$$||u_{\Delta x} - u||_{L^\infty} \leq C(T)\Delta x^p \quad \text{or} \quad ||u_{\Delta x} - u||_{L^1} \leq C(T)\Delta x^{\frac{p}{p+1}}$$

have been proven in [Des08a] and [Des08b], for regular and BV initial data respectively; Theorem 1 is a special case of this result. Nonlinear schemes for (1) are widely used, because it is the only way to obtain methods that are of order larger than 2 and that verify a discrete maximum principle. For a description of the most popular methods for the linear advection equation, see [LeV92].

Among all the schemes available for (1), the scheme introduced by Després and Lagoutière in [DL01] has the property of having an error that does not grow indefinitely with time. This property has been verified numerically but is still a conjecture, and this paper is a step toward its proof. Our presentation is closer to the one in [BCLL08] (Section 2, paragraph *Linear advection equation*) which is equivalent to the original one in [DL01]. Their main idea is to reverse the average step of the upwind scheme (3), by considering that each value u_j^n comes from an average of a discontinuity joining u_{j-1}^n to u_{j+1}^n located somewhere inside the cell (recall that at time $n\Delta t$, the approximate solution is constant equal to u_j^n on the interval $[x_{j-1/2}, x_{j+1/2})$).

This scheme can be decomposed in three steps:

1. In $[x_{j-1/2}, x_{j+1/2})$, replace u_j^n by a piecewise constant map of the form

$$(u_{rec}^n)_{|[x_{j-1/2},x_{j+1/2})} : x \longmapsto \begin{cases} u_{j-1}^n & \text{if} \quad x_{j-1/2} \leq x < x_{j-1/2} + d_j^n \\ u_{j+1}^n & \text{if} \quad x_{j-1/2} + d_j^n \leq x < x_{j+1/2} \end{cases}$$

   The discontinuity is placed at a distance $d_j^n \in [0, \Delta x]$ of the left extremity of the cell, in such a way that the total mass inside the cell is preserved, i.e.

$$\Delta x\, u_j^n = d_j^n u_{j-1}^n + (\Delta x - d_j^n) u_{j+1}^n.$$

   If this is not possible, do nothing, i.e. $(u_{rec}^n)_{|[x_{j-1/2},x_{j+1/2})} = u_j^n$.
2. Compute the exact solution of (1) with initial data u_{rec}^n at time Δt, which is nothing but $x \mapsto u_{rec}^n(x - V\Delta t)$.
3. Define u_j^{n+1} as the average of this exact solution on $[x_{j-1/2}, x_{j+1/2}]$:

$$u_j^{n+1} = \frac{1}{\Delta x} \int_{x_{j-1/2}}^{x_{j+1/2}} u_{rec}^n(x - V\Delta t)dx.$$

The property that makes this scheme unique is that it is exact for a large class of initial data (the vast majority of schemes are exact only for constant initial data).

Proposition 2 **(Després, Lagoutière, Theorem 3 of [DL01])**

Suppose that u^0 is piecewise constant, with plateaus of width larger than $3\Delta x$. Then

$$\forall n \in \mathbf{N},\ \forall j \in \mathbf{Z}, \qquad u_j^n = \frac{1}{\Delta x} \int_{x_{j-1/2}}^{x_{j+1/2}} u^0(x - Vn\Delta t)dx.$$

Numerically it is observed that this class of initial data behaves as an attractor. Plateaus are created in the first time steps and are then advected exactly. The

following conjecture is a refinement of Conjecture 1 in [DL01], with the expected rate of convergence of 1/2 similar to Theorem 1. In contrast with the former classical results of Proposition 1, the constant does not depend on time; this is the important and original point of this result.

Conjecture 3. — *Let u^0 be a function with bounded variations to which we associate the initialization $u_j^0 = \frac{1}{\Delta x}\int_{x_{j-1/2}}^{x_{j+1/2}} u^0(x)dx$. Suppose that the ratio $\lambda = \frac{V\Delta t}{\Delta x}$ is kept fixed and belongs to $(0,1]\setminus\{1/2\}$. Then there exists a constant $C>0$, depending only on u^0 and λ such that*

$$\forall n \in \mathbf{N}, \qquad \Delta x \sum_{j\in\mathbf{Z}} \left| u_j^n - \frac{1}{\Delta x}\int_{x_{j-1/2}}^{x_{j+1/2}} u^0(x - Vn\Delta t)dx \right| \leq C\sqrt{\Delta x}.$$

We recall that the exact solution of (1) is $u(t,x) = u^0(x - Vt)$.

This conjecture is supported by numerous numerical simulations, some of them given in Section 2, that suggest the existence of a global attractor A for bounded increasing configurations, made of solutions whose reconstructions have plateaus wider than $3\Delta x$ (see Figure 1). In other words, we expect that for any bounded increasing initial data (u_j^0) and for any $\varepsilon > 0$, there is a solution $(\tilde{u}_j^n) \in A$ and an integer $N \in \mathbf{N}$ such that for any $n \geq N$, one has $\|u^n - \tilde{u}^n\|_\infty \leq \varepsilon$. Note that elements $\tilde{u} \in A$ are almost periodic in time up to a space translation (in the sense of Bohr, see [Boh47]), that is: for any $\varepsilon > 0$, the set P_ε of "ε-almost periods" has bounded gaps (i.e. there exists $R > 0$ such that any interval of length R meets P_ε), where P_ε is the set of $T \in \mathbf{N}$ such that, for any $n \in \mathbf{N}$, one has

$$\left\| \left(\tilde{u}_j^n - \tilde{u}_{j-\lfloor T\lambda\rfloor}^{n+T}\right)_j \right\|_\infty \leq \varepsilon.$$

This property is a consequence of the fact that for any $\varepsilon > 0$, the set of $T \in \mathbf{N}$ such that $T\lambda$ *mod* 1 is ε-close to 0 has bounded gaps. Note that for compactly supported initial data (or even for initial data whose space derivative is compactly supported), these estimations for the L^∞ norm imply the same ones for the L^1 norm.

For more details about the concept of attractor, see [Mil85a, Mil85b], [Mil06].

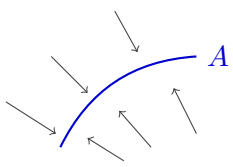

FIGURE 1. Picture of an attractor A: any solution eventually approaches a solution inside the set A of solutions whose reconstructions have plateaus of width bigger than 3

In this work, we study a dynamical process very similar to the Després and Lagoutière scheme. We prove that it is indeed necessary to exclude $\lambda = 1/2$ from Conjecture 3, since the asymptotic behavior of the scheme is incompatible with a uniform in time error bound. In the case $\lambda \neq 1/2$, our dynamical process is slightly different from the original Després and Lagoutière scheme but retains the important Property 2. As a consequence, its general behavior is very close to the original

scheme. For this modified scheme, we prove the existence of a local attractor A and understand the formation and stability of an intermediate plateau.

In the next section, we present in details the dynamical process under study in this paper. We state our two main results and discuss their relations with Conjecture 3. We further simplify the problem and present important lemmas. Some numerical illustrations of Conjecture 3 and Proposition 2 are given in Section 2. This section also illustrates how close the Després and Lagoutière scheme and the dynamical process of Section 1.2 are. The asymptotic behavior when $\lambda = 1/2$ is proven in Section 3. Eventually in Section 4, a particular case illustrating the exponential convergence toward solutions with plateaus is studied. This result gives some insight on the dynamical behavior of the Després and Lagoutière scheme, but is still far from a general proof of Conjecture 3, which remains open at the moment.

1.2. A related shifted grids dynamical process. —

1.2.1. *Reconstruction and grid shifting.* — In order to simplify the analysis while retaining the most important aspects, we do the following modifications. First, we set $V = 1$, $\Delta x = 1$ and $x_j = j$. It follows that $\Delta t = \lambda$. This is just a rescaling in space and time that reduces the number of parameters.

Then, we use a frame of reference that moves at speed V. It means that the exact solution is constant in time but that the grid moves to the left of $V\Delta t$ at each time step. Since the transport equation and all numerical schemes are Galilean invariant, this is equivalent to the fixed grid, moving solution scheme. This can be checked, for example, for the upwind scheme presented in the introduction. If we fix the approximate solution $u^{\Delta x}(y) = \sum_{j\in\mathbf{Z}} u_j^n \mathbf{1}_{x_{j-1/2},x_{j+1/2}}(y)$ and shift the grid to the left, we also find (3):

$$\int_{x_{j-1/2}-V\Delta t}^{x_{j+1/2}-V\Delta t} u^{\Delta x}(y)\,dy = V\Delta t u_{j-1}^n + (\Delta x - V\Delta t)u_j^n.$$

More importantly, instead of shifting the grid of λ to the left at each time iteration, we do so only for odd time iterations and shift it of λ to the right for even time iterations. The advantage of shifting the grid alternatively to the left and to the right is obviously that we end up with the same grid after two iterations. If $\lambda = 1/2$, there is no difference with the case where the grid is always shifted to the left, up to a reindexation of the cells after each couple of iterations. For any real number a we denote by $\mathcal{C}_a$ the interval centered around a of size 1: $\mathcal{C}_a = (a - 1/2, a + 1/2)$.

The structure of the scheme follows the same guidelines as the Després and Lagoutière scheme [DL01], following the discontinuous reconstruction approach of [BCLL08]. Notations are gathered on Figure 2. The process is initialized with the sequence $(u_j^0)_{j\in\mathbf{Z}}$ given by (2). For odd iterations in time the process is centered on integer points j at the beginning of the time step and the grid is shifted of λ to the left.

1. *Reconstruction step.* Compute the distance d_j^{2n} from the *right* interface $j + 1/2$ such that

$$(1 - d_j^{2n})u_{j-1}^{2n} + d_j^{2n}u_{j+1}^{2n} = u_j^{2n}.$$

One gets

$$d_j^{2n} = \frac{u_j^{2n} - u_{j-1}^{2n}}{u_{j+1}^{2n} - u_{j-1}^{2n}}, \tag{4}$$

and we set arbitrarily $d_j^{2n} = -1$ if it is not defined. Then, define

$$u_{j,L}^{2n} = \begin{cases} u_{j-1}^{2n} & \text{if } 0 < d_j^{2n} < 1, \\ u_j^{2n} & \text{otherwise,} \end{cases} \qquad u_{j,R}^{2n} = \begin{cases} u_{j+1}^{2n} & \text{if } 0 < d_j^{2n} < 1, \\ u_j^{2n} & \text{otherwise.} \end{cases}$$

The reconstructed solution at iteration $2n$ is obtained as

$$u_{rec}^{2n}(x) = \sum_{j\in\mathbf{Z}} \left(u_{j,L}^{2n} \mathbf{1}_{d_j^{2n} < (j+1/2)-x<1} + u_{j,R}^{2n} \mathbf{1}_{0<(j+1/2)-x<d_j^{2n}} \right) \mathbf{1}_{x\in\mathcal{C}_j}.$$

2. *Shifting.* Shift the grid of λ to the left and define

$$u_{j-\lambda}^{2n+1} = \int_{\mathcal{C}_{j-\lambda}} u_{rec}^{2n}(x)\,dx$$

and $u_{j-\lambda}^{2n+1}(x) = \sum_{j\in\mathbf{Z}} u_{j-\lambda}^{2n} \mathbf{1}_{x\in\mathcal{C}_{j-\lambda}}$.

At the beginning of an even iteration in time, the cells are centered around the points $(j-\lambda)_{j\in\mathbf{Z}}$, and we follow the same process but move the grid to the right:

1. *Reconstruction step.* Compute the distance $d_{j-\lambda}^{2n+1}$ from the *left* interface such that

$$d_{j-\lambda}^{2n+1} u_{j-1-\lambda}^{2n+1} + (1 - d_{j-\lambda}^{2n+1}) u_{j+1-\lambda}^{2n+1} = u_{j-\lambda}^{2n+1}.$$

If it does not exists, set $d_{j-\lambda}^{2n+1} = -1$. Then define

$$u_{j-\lambda,L}^{2n} = \begin{cases} u_{j-1-\lambda}^{2n+1} & \text{if } 0 < d_{j-\lambda}^{2n+1} < 1, \\ u_{j-\lambda}^{2n+1} & \text{otherwise,} \end{cases} \quad u_{j-\lambda,R}^{2n} = \begin{cases} u_{j+1-\lambda}^{2n+1} & \text{if } 0 < d_{j-\lambda}^{2n+1} < 1, \\ u_{j-\lambda}^{2n+1} & \text{otherwise.} \end{cases}$$

The reconstructed solution at iteration $2n+1$ is

$$u_{rec}^{2n+1}(x) = \sum_{j\in\mathbf{Z}} \left(u_{j,L}^{2n} \mathbf{1}_{0<x-(j-\lambda-1/2)<d_{j-\lambda}^{2n+1}} + u_{j,R}^{2n} \mathbf{1}_{d_{j-\lambda}^{2n+1}<x-(j-\lambda-1/2)<1} \right) \mathbf{1}_{x\in\mathcal{C}_{j-\lambda}}.$$

2. *Shifting.* Shift the grid of λ to the right and define

$$u_j^{2n+2} = \int_{\mathcal{C}_j} u_{rec}^{2n+1}(x)\,dx$$

and $u^{2n+2}(x) = \sum_{j\in\mathbf{Z}} u_j^{2n+2} \mathbf{1}_{x\in\mathcal{C}_j}$.

Remark 4. — Computing the distances from the right and left interfaces is the most natural choice for computations. With that choice, odd and even iterations in time are similar, up to the transformation $x \mapsto -x$.

Proposition 5. — *Fix an initial sequence $(u_j^0)_{j\in\mathbf{Z}}$ and $\lambda \in (0,1]$. Then, for all $j \in \mathbf{Z}$,*

$$u_{j-\lambda}^1 = v_j^1(\lambda) \quad \textit{and} \quad u_j^2 = v_{j+1}^2(1-\lambda)$$

where $(v^1(\lambda))$ is the sequence given by the Després and Lagoutière scheme initialized with (u^0) after one iteration, when the ratio $\frac{V\Delta t}{\Delta x}$ equals to λ, and $(v^2(1-\lambda))$ is the

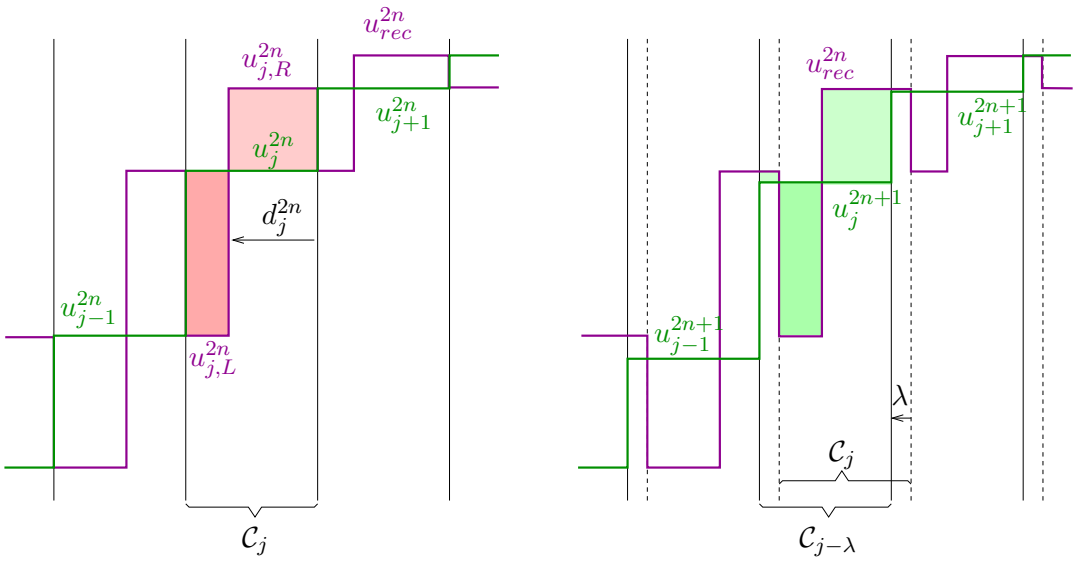

FIGURE 2. The process where the grid is shifted to the left (odd iterations in time). Regions of same colors are of equal areas.

sequence given by the Després and Lagoutière scheme initialized with $(v^1(\lambda))$ *after one iteration, when the ratio* $\frac{V\Delta t}{\Delta x}$ *equals to* $1-\lambda$.

In particular, when $\lambda = 1/2$, *the two schemes are equivalent, up to a translation in space every two iterations.*

Proof. — We present the case $u_{j-2}^0 < u_{j-1}^0 < u_j^0 < u_{j+1}^0$. Both distances d_{j-1}^0 and d_j^0 lie in $(0,1)$. The computation of $u_{j-\lambda}^1 = \int_{j-1/2-\lambda}^{j+1/2-\lambda} u_{rec}^0(x)\,dx$ depends on wether those distances are smaller than λ or not. A straightforward computation, first on $[j-1/2, j+1/2-\lambda]$, then on $[j-1/2-\lambda, j-1/2]$ gives

$$\begin{aligned} u_{j-\lambda}^1 = &\begin{cases} (1-\lambda)u_{j-1}^0 & \text{if } d_j^0 \le \lambda \\ (1-\lambda)u_j^0 - \lambda(u_{j+1}^0 - u_j^0) & \text{if } d_j^0 > \lambda \end{cases} \\ &+ \begin{cases} \lambda u_j^0 & \text{if } d_{j-1}^0 \ge \lambda \\ \lambda u_{j-1}^0 + (1-\lambda)(u_{j-1}^0 - u_{j-2}^0) & \text{if } d_{j-1}^0 < \lambda \end{cases} \end{aligned} \tag{5}$$

which rewrites

$$\begin{aligned} u_{j-\lambda}^1 = (1-\lambda)u_j^0 - \lambda &\begin{cases} \frac{1-\lambda}{\lambda}(u_j^0 - u_{j-1}^0) & \text{if } d_j^0 \le \lambda \\ (u_{j+1}^0 - u_j^0) & \text{if } d_j^0 > \lambda \end{cases} \\ + \lambda u_j^0 + \lambda &\begin{cases} 0 & \text{if } d_{j-1}^0 \ge \lambda \\ u_{j-1}^0 - u_j^0 + \frac{1-\lambda}{\lambda}(u_{j-1}^0 - u_{j-2}^0) & \text{if } d_{j-1}^0 < \lambda \end{cases} \end{aligned}$$

According to [BCLL08], the Després and Lagoutière scheme writes

$$\begin{aligned} u_j^1 &= u_j^0 - \lambda(f_{j+1/2}^0 - f_{j-1/2}^0) \\ &= (1-\lambda)u_j^0 - \lambda(f_{j+1/2}^0 - u_j^0) \\ &\quad + \lambda u_j^0 + \lambda(f_{j-1/2}^0 - u_j^0) \end{aligned}$$

with in this case

$$f^0_{j+1/2} = \frac{1}{\lambda}\min(d^0_j,\lambda)u^0_{j+1} + \frac{1}{\lambda}\max(\lambda - d^0_j, 0)u^0_{j-1}$$
$$= \begin{cases} u^0_{j+1} & \text{if } d^0_j \geq \lambda \\ u^0_{j-1} + \dfrac{1}{\lambda}(u^0_j - u^0_{j-1}) & \text{if } d^0_j < \lambda \end{cases}$$

and we obtain the same expressions. For the second iteration in time, notice that shifting the grid of λ to the right is equivalent, up to a reindexation, of shifting it to the left of $(1-\lambda)$. Eventually, if u^0_j or u^0_{j-1} are larger or smaller than both their neighbors, the reconstruction is constant within the cell. The computation is easier and still corresponds to the Després and Lagoutière scheme. □

1.3. Main results and link with Conjecture 3. — We are now in position to state our main results. The first one deals with the case $\lambda = 1/2$. In that case, our dynamical process is strictly equivalent to the Després and Lagoutière scheme, as there is no difference between shifting the grid to the left or to the right.

Theorem A. — *Suppose that the initial sequence $(u^0_j)_{j\in\mathbf{Z}}$ strictly increases from 0 to 1 on some interval $[a,b]$, and is equal to 0 on $(-\infty,a)$ and to 1 on $(b,+\infty)$. Then for all $n \in \mathbf{N}$ large enough, there exists an integer $j^n_\infty \in \mathbf{Z}$ such that $(u^n_j)_{j\in\mathbf{Z}}$ is a discrete Heaviside function, that is,*

$$u^n_j = \begin{cases} 0 & \text{if } j < j^n_\infty, \\ 1 & \text{if } j > j^n_\infty. \end{cases}$$

Moreover, $|j^{n+1}_\infty - j^n_\infty| \leq 1$ and $j^{n+2}_\infty = j^n_\infty$.

The proof of this result is given in Section 3 and relies on a careful study of the first and last nonnull jumps between two adjacent cells, together with a uniform control on the height of the inner jumps. The role of the first jump is also illustrated in the Appendix B, where we study a "half infinite staircase" initial data (which does not have bounded variations), see Proposition 21. Theorem A yields the following result.

Proposition 6. — *Let u^0 be a strictly increasing from 0 to 1 on some interval $[a,b]$ and constant equals to 0 on $(-\infty,a)$ and to 1 on $[b,+\infty)$. Consider the Després and Lagoutière scheme initialized with (2). Suppose that the ratio $\lambda = \frac{V\Delta t}{\Delta x}$ is kept fixed equal to 1/2. Then, for any $p > 0$, it is not possible to find a constant C independent on Δx such that*

$$\forall n \in \mathbf{N}, \qquad \Delta x \sum_{j\in\mathbf{Z}} \left| u^n_j - \frac{1}{\Delta x}\int_{x_{j-1/2}}^{x_{j+1/2}} u^0(x - Vn\Delta t)dx \right| \leq C\Delta x^p.$$

Proof. — For such an initial data, the initial sequence verifies the hypothesis of Theorem A. Moreover, up to a rescaling in space and time and to a translation in space, the approximate solution given by the Després and Lagoutière scheme is exactly the same as the one given by the dynamical process of Section 1.2.1. As a consequence, after

a large enough number of iterations $N^{\Delta x}$, the approximate solution is the projection on the grid of a Heaviside function, moving at speed V:

$$\forall j \in \mathbf{Z},\ \forall n \geq N^{\Delta x},\ u_j^n = \frac{1}{\Delta x} \int_{x_{j-1/2}}^{x_{j+1/2}} H(x - x_0 - Vn\Delta t)\, dx.$$

for some $x_0 \in \mathbf{R}$ and we have, for all n larger than $N^{\Delta x}$,

$$\Delta x \sum_{j \in \mathbf{Z}} \left| u_j^n - \frac{1}{\Delta x} \int_{x_{j-1/2}}^{x_{j+1/2}} u^0(x - Vn\Delta t) dx \right|$$
$$= \left| \int_{\mathbf{R}} u^0(x - Vn\Delta t) - H(x - x_0 - Vn\Delta t)\, dx \right|$$

which is bounded from below by a strictly positive constant independent on Δx. Thus this quantity cannot go to 0 as Δx goes to 0. □

Remark 7. — This result shows that Conjecture A does not hold for $\lambda = 1/2$ but does not prevent the existence of bounds similar to the one of Proposition 1. Indeed, the number of iterations $N^{\Delta x}$ necessary to reach the asymptotic Heaviside function is much larger than $1/\Delta t$. Thus, in a fixed time interval $[0, T]$, for small enough Δx, the Heaviside function does not have enough time to appear.

In a last part of the article, we prove the following result when $\lambda \neq 1/2$ and the grid is alternatively shifted to the left and to the right of a parameter $\lambda \neq 1/2$ (see Proposition 16 for a precise statement).

Theorem B. — *For any $\lambda \in (0,1)\backslash\{1/2\}$, there exists a nonempty open set of initial discretizations, that increase from 0 to 1 with 4 intermediate values, for which $(u_j^n)_{j\in\mathbf{Z}}$ converges uniformly exponentially fast (in time n) towards a limit configuration that contains an intermediate plateau.*

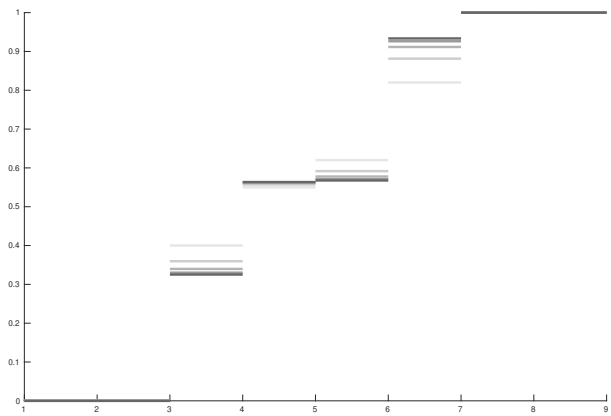

FIGURE 3. Illustration of Theorem B (scheme of Section 1.2). The initial data is in light grey, most recent iterations of the dynamical process are of darker color.

This result is illustrated on Figure 3, where the initial discretization is in light grey and the limit configuration in black. If this result explains how plateaus form with time, it only gives a glimpse on why Conjecture 3 may hold. First, it is only a local result for initial data close enough to a configuration with a plateau, for which we know that the scheme is exact. It does not give any insight on why those configurations are *globally* attractive. Second, since Theorem B is limited to initial data with 4 intermediate values, it does not correspond to any initial data u^0 discretized on a finer and finer grid. Indeed, doing so the number of intermediate values becomes larger and larger as Δx tends to 0.

2. Numerical simulations

We now give some numerical illustrations of the long time behavior of the scheme and the influence of the parameter λ.

2.1. Illustration of Theorem A and Conjecture 3. — To begin with, we consider the smooth 1-periodic initial data defined by

$$\forall x \in \mathbb{T} = \mathbf{R}/\mathbf{Z},\ u^0(x) = \cos(2\pi x)\sin(10\pi x) \tag{6}$$

and we compare three classical schemes for the transport equation (1):

- the upwind scheme (3), which is linear and first order;
- the Lax–Wendroff scheme
$$u_j^{n+1} = u_j^n - \frac{V\Delta t}{2\Delta x}(u_{j+1}^n - u_{j-1}^n) + \frac{V^2\Delta t^2}{2\Delta x^2}(u_{j+1}^n - 2u_j^n + u_{j-1}^n),$$
which is linear and second order;
- the Després and Lagoutière scheme [DL01], which is first order and nonlinear;

We set $V = 1$ and a final time of $T = 10$. The space interval $[0, 1]$ is discretized with M cells and the time step is related to the space step $\Delta x = 1/M$ by $\Delta t = \frac{0.4\Delta x}{V}$, which ensures stability and convergence of the schemes ($\lambda = 0.4$). We set periodic boundary conditions: for all n and for any scheme, when a subscript j outside of $\{1, \cdots, M\}$ is needed, we use $u_{-1}^n = u_{M-1}^n$, $u_0^n = u_M^n$, $u_{M+1}^n = u_1^n$ and $u_{M+2}^n = u_2^n$. We are interested in the evolution of the L^1-error

$$Err(n) = \Delta x \sum_{j=1}^{M} \left| u_j^n - u^0(x_j - Vn\Delta t) \right|.$$

The results for $M = 200$ and $M = 600$ are given on Figure 4. The upwind scheme is so diffusive that all oscillations are flattened and the approximate solution is almost constant. The Lax-Wendroff scheme is much less diffusive, however the approximate solution is not acceptable for $M = 200$. With the Després and Lagoutière scheme, stairs (or plateaus) appear in the first iterations in time and are then advected exactly. They are clearly visible for $M = 200$ and also present, 6 times thinner, for $M = 600$. For this scheme the maximum value does not decrease with time.

As expected, the results are better for $M = 600$. With finer and finer meshes, we could illustrate the validity of Theorem 1 on the time interval $[0, 10]$. However, whatever the value of M we can reproduce Figure 4, right, by increasing the final time T.

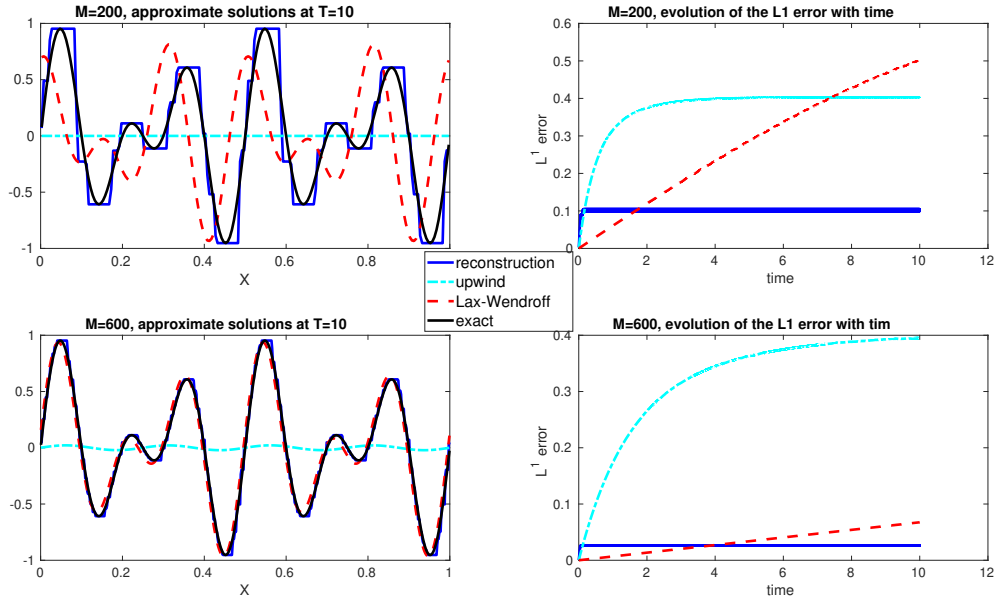

FIGURE 4. Left: approximate solution after 10 periods for the initial data (6) for different schemes with $M = 200$ (top) and $M = 600$ (bottom). Right: evolution of the L^1-error with time.

2.2. Influence of λ. — The initial data is now 1.5-periodic with

$$\forall x \in [-0.3, 1.2],\ u^0(x) = \begin{cases} -1 & \text{if } -0.3 \le x \le 0 \\ \sin(\pi x - \pi/2) & \text{if } 0 \le x \le 1 \\ 1 & \text{if } 1 \le x \le 1.2 \end{cases} \tag{7}$$

It contains a discontinuity at $x = 1.2$ and a smooth part in the interval $[0, 1]$.

On Figure 5, we plot the result at time 22.5 (15 periods) for the original scheme of Després and Lagoutière for CFL numbers $\lambda = \frac{V\Delta t}{\Delta x}$ of 0.47, 0.48, 0.49 and 0.5 the critical value. We took $M = 100$ and $V = 1$.

The final time is large enough to observe the long time behavior of Theorem A when $\lambda = 1/2$: the approximate solution is an Heaviside function. The closest λ is close to $1/2$, the fewer plateaus there is and the wider they are. On the right of this Figure, we plot the quantity

$$I(n) = \sum_{j=1}^{M} \min(|u_{j-1}^n - u_j^n|, |u_j^n - u_{j+1}^n|, |u_{j+1}^n - u_{j+2}^n|)$$

(with periodic boundary conditions $u_{-1}^n = u_{M-1}^n$, $u_0^n = u_M^n$, $u_{M+1}^n = u_1^n$ and $u_{M+2}^n = u_2^n$). This quantity is null if (u_j^n) is piecewise constant with plateaus of width larger than 3 cells. Intermediate values between two plateaus are allowed. It somehow illustrates that the family of Proposition 2 behaves as a global attractor.

The result of the same simulation for the related scheme of Section 1.2, where the grid is shifted alternatively to the left and to the right, are given on Figure 6. We see that the results are more symmetric and that the convergence is faster, but overall

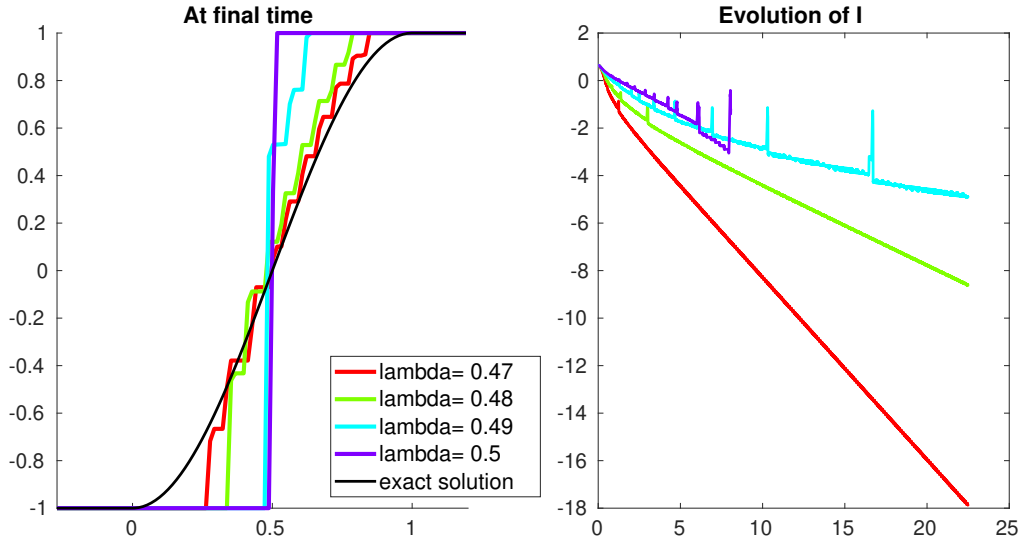

FIGURE 5. Approximate solution after 15 periods for the initial data (7) and for different CFL number, when the grid is fixed (Després and Lagoutière scheme). Left: solution at the final time, right: evolution of the quantity I in logarithmic scale.

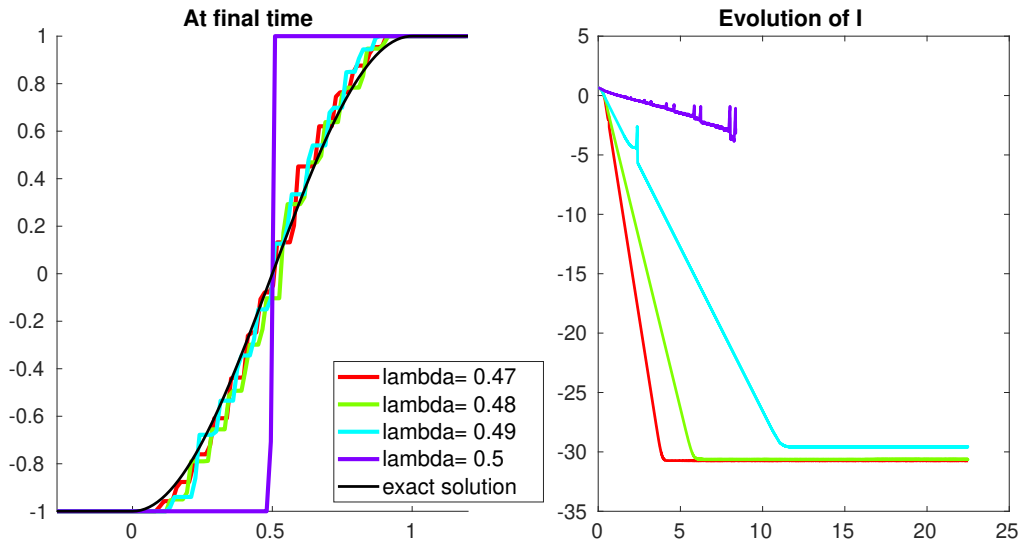

FIGURE 6. Approximate solution after 15 periods for the initial data (7) for different CFL number, when the grid is shifted (scheme of Section 1.2). Left: solution at the final time, right: evolution of the quantity I in logarithmic scale.

very similar. Both schemes exhibit the same characteristic stairs formation and have the same asymptotic behavior.

Remark 8. — The initial data and solution are periodic and do not strictly speaking fit the monotonicity assumption of Theorem A. However, since the discontinuity joining 1 to -1 lies in between two regions where the numerical solution is constant, it is exactly advected by the Després and Lagoutière scheme (Proposition 2).

Remark 9. — The long time behavior observed here for $\lambda = 1/2$ is not in contradiction with Theorem 1. Indeed for this final time, when the number of cells M is large enough, stairs do not have time to completely merge together and the scheme converges, in the sense that the approximate solution *at time* T is closer and closer to the exact one.

3. The symmetric case of a half cell shift

In this section we study the long time behavior of the scheme when $\lambda = 1/2$. We suppose that the initial data consists in a finite succession of strictly positive jumps. We prove that after a finite number of iterations, the numerical solution contains only one intermediate value. With the notation of Section 1.2, we denote by $(u^1_{j+1/2})_{j\in\mathbf{Z}}$ the solution after one iteration of the scheme, and by $(u^2_j)_{j\in\mathbf{Z}}$ the solution after the second iteration, and so on.

Definition 10. — The *jumps associated to the solution* (u) are defined by the sequence $(S^n_j = u^n_{j+1/2} - u^n_{j-1/2})_{j\in\mathbf{Z}}$ for odd time steps n, and by sequence $(S^n_{j+1/2} = u^n_{j+1} - u^n_j)_{j\in\mathbf{Z}}$ for even time steps n.

We are interested in the following class of sequences.

Definition 11. — Let α be a nonnegative real number and $M \geq 1$ be an integer. The set of M*-configurations with inner jumps larger than* α is the set of sequences

$$H^M_\alpha = \left\{ \begin{array}{l} (v_j)_{j\in\mathbf{Z}} \in \mathbf{R}^{\mathbf{N}} \text{ such that } \exists j_0 \in \mathbf{Z} : \\ \qquad \bullet\ v_j = 0 \ \text{ if } j \leq j_0 \\ \qquad \bullet\ v_j = 1 \ \text{ if } j \geq j_0 + M \\ \qquad \bullet\ v_{j_0+1} - v_{j_0} > 0 \ \text{ and } v_{j_0+M} - v_{j_0+M-1} > 0 \\ \qquad \bullet\ v_{j+1} - v_j > \alpha \quad \forall j \in \{j_0+1, \cdots, j_0+M-2\} \end{array} \right\} \qquad (H^M_\alpha)$$

and the set of *configurations with inner jumps larger than* α is $H_\alpha = \bigcup_{M\in\mathbf{N}} H^M_\alpha$.

From now on we suppose that the initial data $(u^0_j)_{j\in\mathbf{Z}}$ belongs to H_α for some $\alpha > 0$. The long time behavior follows from the following points.

- If the initial data is in H_α, then all its iterations also belong to H_α. The case $\alpha = 0$ is easy (Lemma 13), the case $\alpha > 0$ requires a finer analysis of the first and last jumps (Lemma 14).
- The number M of strictly positive jumps essentially decreases with time, until it reaches 1 or 2.
- If $(u_j)^n$ belongs to $H^1_\alpha \cup H^2_\alpha$, so does $(u_j)^{n+1}$ and $(u_j)^{n+2} = (u_j)^n$.

For the sake of simplicity, intermediate results are stated at iteration $n = 0$. We start with a useful but simple lemma.

Lemma 12. — *Consider three adjacent cells u^0_{j-1}, u^0_j and u^0_{j+1}, with $u^0_{j-1} \leq u^0_j \leq u^0_{j+1}$. Denote by $x \mapsto u^0_{rec}(x)$ the associated reconstruction.*

– *If $S^0_{j-1/2} \geq S^0_{j+1/2}$, then*

$$\int_{j-1/2}^{j} u^0_{rec}(x)dx = u^0_j - \frac{u^0_{j+1}}{2} \quad \text{and} \quad \int_{j}^{j+1/2} u^0_{rec}(x)dx = \frac{u^0_{j+1}}{2}. \tag{8}$$

– *If $S^0_{j-1/2} \leq S^0_{j+1/2}$, then*

$$\int_{j-1/2}^{j} u^0_{rec}(x)dx = \frac{u^0_{j-1}}{2} \quad \text{and} \quad \int_{j}^{j+1/2} u^0_{rec}(x)dx = u^0_j - \frac{u^0_{j-1}}{2}. \tag{9}$$

In any case we have

$$\frac{u^0_{j-1}}{2} \leq \int_{j-1/2}^{j} u^0_{rec}(x)dx \leq \frac{u^0_j}{2} \quad \text{and} \quad \frac{u^0_j}{2} \leq \int_{j}^{j+1/2} u^0_{rec}(x)dx \leq \frac{u^0_{j+1}}{2}. \tag{10}$$

Proof. — The proof is illustrated on Figure 7. For readability we denote by $a = u^0_{j-1}$, $b = u^0_j$ and $c = u^0_{j+1}$.

If $S^0_{j-1/2} \geq S^0_{j+1/2}$, i.e. if $c - b \leq b - a$, the reconstructed discontinuity lies in the left half cell, on which the reconstruction's integral is $\frac{b}{2} - \frac{c-b}{2} \in \left[\frac{a}{2}, \frac{b}{2}\right]$. On the right half cell the reconstruction is constant equal to c.

If $S^0_{j-1/2} \leq S^0_{j+1/2}$, i.e. if $c - b \geq b - a$, the discontinuity falls in the right half cell and $\int_j^{j+1/2} u^0_{rec}(x)dx = \frac{b}{2} + \frac{b-a}{2} \in \left[\frac{b}{2}, \frac{c}{2}\right]$. The reconstruction is equal to a on the left half cell.

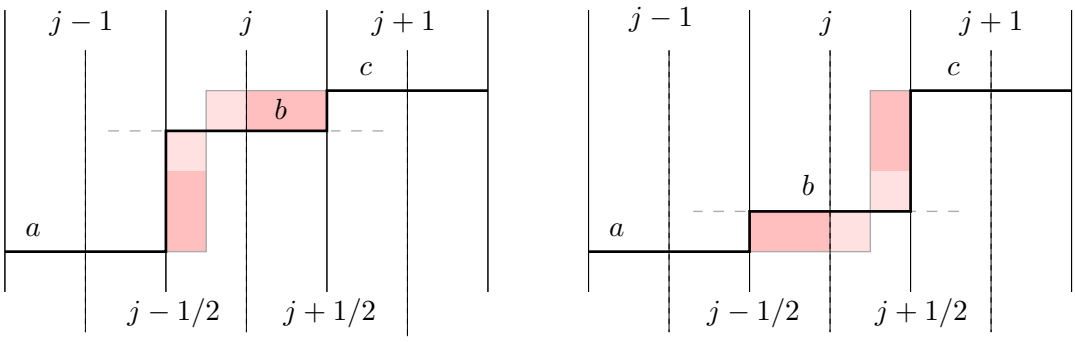

FIGURE 7. Big jump / small jump (left) or small jump / big jump (right)? Either way, the areas per half cells are easy to compute. The rectangles of the same color have the same area.

□

We now prove that the class H_α of configurations with inner jumps larger than α is preserved by the scheme.

Lemma 13. — *If the jumps $(S^0_{j+1/2})_{j\in\mathbf{Z}}$ are nonnegative, then*

$$\forall j \in \mathbf{Z},\ S^1_j \geq \min(S^0_{j-1/2}, S^0_{j+1/2}).$$

In particular, if $(u^0_j)_{j\in\mathbf{Z}}$ belongs to H_0, so does $(u^1_{j+1/2})_{j\in\mathbf{Z}}$.

Proof. — We denote by $u^0_{j-1} = a$, $u^0_j = b$ and $u^0_{j+1} = c$, so that $S^0_{j-1/2} = b - a$ and $S^0_{j+1/2} = c - b$.

We begin with the case $S^0_{j-1/2} \geq S^0_{j+1/2}$ (Figure 7, left). Lemma 12 gives

$$\begin{aligned} S^1_j &= u^1_{j+1/2} - u^1_{j-1/2} \\ &= \int_j^{j+1/2} u^0_{rec}(x)\,dx + \int_{j+1/2}^{j+1} u^0_{rec}(x)\,dx \\ &\qquad - \int_{j-1}^{j-1/2} u^{rec}_0(x)\,dx - \int_{j-1/2}^{j} u^{rec}_0(x)\,dx \\ &\geq \frac{c}{2} + \frac{b}{2} - \frac{b}{2} - \left(b - \frac{c}{2}\right) = c - b = \min(S^0_{j-1/2}, S^0_{j+1/2}) \end{aligned}$$

A similar computation gives the result in the other case.

To prove the last part of the lemma, one easily sees that $S^1_j = 0$ for any $j \leq 0$ or $j \geq M$. □

This proof does not work immediately for $\alpha > 0$ because at the left extremity, it only yields $S^1_{j_0} \geq \min(S^0_{j_0-1/2}, S^0_{j_0+1/2})$ which may be non zero and $S^1_{j_0+1} \geq \min(S^0_{j_0+1/2}, S^0_{j_0+3/2})$, which may be smaller than α, as an element of H_α does not have any constraint on the first jump $S^0_{j_0+1/2}$.

Lemma 14. — *Suppose that the initial data $(u^0_j)_{j\in\mathbf{Z}}$ belongs to H_α for some $\alpha > 0$. Then $(u^1_{j+1/2})_{j\in\mathbf{Z}}$ also belongs to H_α. More precisely,*

- *if $0 < S^0_{j_0+1/2} \leq S^0_{j_0+3/2}$, i.e. if the first jump is smaller than the second one, then $S^1_{j_0} = 0$;*
- *if $0 < S^0_{j_0+3/2} < S^0_{j_0+1/2}$, i.e. if the first jump is larger than the second one, then $0 < S^1_{j_0} \leq S^1_{j_0+1}$. Moreover, if $S^0_{j_0+5/2} \geq \alpha$, then $S^2_{j_0+1/2} \leq S^0_{j_0+1/2} - \frac{\alpha}{4}$.*

Proof. — First of all, from the previous lemma and Hypothesis (H^M_α) we have

$$\forall j \in \{j_0 + 2, \cdots, j_0 + M - 2\},\ S^1_j \geq \alpha. \tag{11}$$

We easily see that $u^0_{rec} = 0$ on $(-\infty, j_0 + 1/2)$ and $u^0_{rec} = 1$ on $(j_0 + M - 1/2, +\infty)$. It yields

$$\forall j \leq j_0 - 1 \ \text{ and } \ \forall j \geq j_0 + M + 1,\ S^1_j = 0.$$

We now focus on the two jumps near the left extremity, the results trivially extend to the right extremity. First, if $0 < S^0_{j_0+1/2} \leq S^0_{j_0+3/2}$, then the reconstruction in $\mathcal{C}_{j_0+1}$ lies in the right half of the cell $\left[j_0 + 1, j_0 + \frac{3}{2}\right]$. The reconstruction u^0_{rec} is null on $\left[j_0 + \frac{1}{2}, j_0 + 1\right]$, so $u^1_{j_0+1/2} = 0$ and $S^1_{j_0} = 0$. The first inner jump is $S^1_{j_0+2}$ and is larger than α by (11).

We now focus on the second case $S^0_{j_0+1/2} > S^0_{j_0+3/2} \geq \alpha$. In this case, on the one hand $S^1_{j_0} > 0$ and on the other hand, by Lemma 13, $S^1_{j_0+1} \geq \min(S^0_{j_0+1/2}, S^0_{j_0+3/2}) \geq \alpha$. Hence, $(u^1_{j-1/2})_j \in H_\alpha$, and it remains to prove the bound about the second iteration.

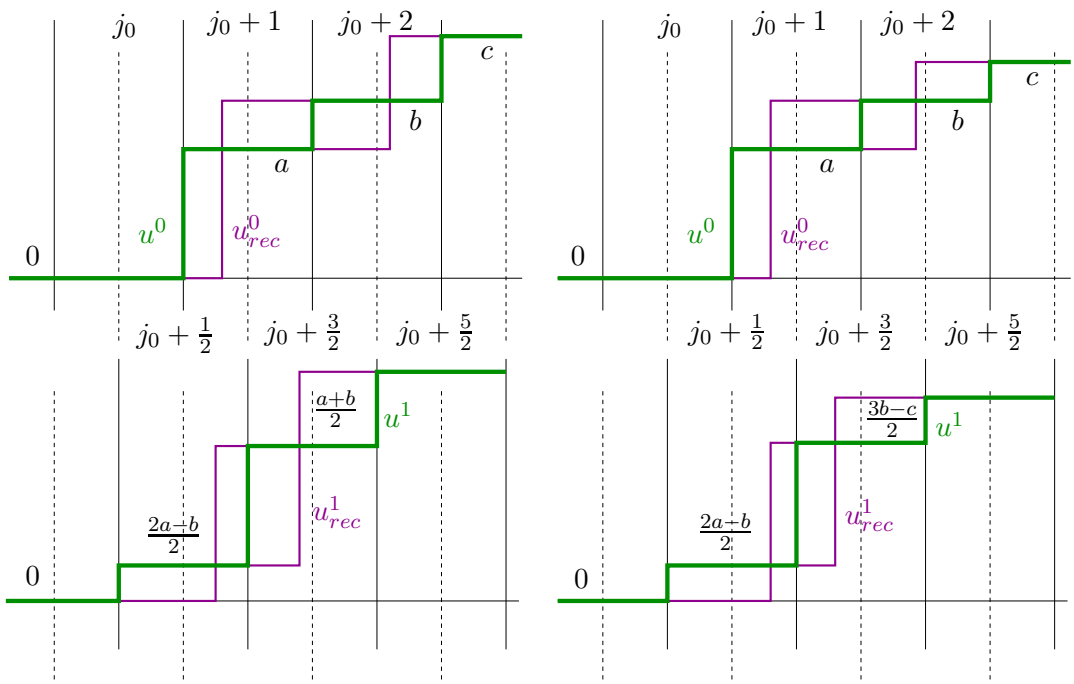

FIGURE 8. Behavior at the left extremity when the first jump is larger than the second one, depending on the relative sizes of the second and third jumps.

We denote as usual $u^0_{j_0+1} = a$, $u^0_{j_0+2} = b$ and $u^0_{j_0+3} = c$. The elements of proof are illustrated on Figure 8. Suppose first that the second jump $S^0_{j_0+3/2}$ is smaller than the third jump $S^0_{j_0+5/2}$ (Figure 8, left). Using Lemma 12 we obtain

$$u^1_{j_0-1/2} = 0,\ u^1_{j_0+1/2} = \frac{2a-b}{2} \text{ and } u^1_{j_0+3/2} = \frac{a+b}{2}.$$

It follows that

$$S^1_{j_0} = \frac{2a-b}{2} < \frac{a}{2} \text{ and } S^1_{j_0+1} = \frac{a+b}{2} - \frac{2a-b}{2} = \frac{2b-a}{2} > \frac{a}{2}.$$

We thus have $S^1_{j_0} < S^1_{j_0+1}$, which implies that $u^2_{j_0} = 0$ and $S^2_{j_0-1/2} = 0$. We can bound the jump in $j_0 + 1/2$, using once again Lemma 12:

$$\begin{aligned} S^2_{j_0+1/2} &= u^2_{j_0+1} - u^2_{j_0} = u^2_{j_0+1} \\ &= \int_{j_0+1/2}^{j_0+1} u^1_{rec}(x)\,dx + \int_{j_0+1}^{j_0+3/2} u^1_{rec}(x)\,dx \\ &\le \frac{2u^1_{j_0+1/2} - u^1_{j_0-1/2}}{2} + \frac{u^1_{j_0+3/2}}{2} \qquad \text{with (9) and (10)} \\ &= a - \frac{b-a}{4} \le S^0_{j_0+1/2} - \frac{\alpha}{4}. \end{aligned}$$

To conclude, we treat the case where the third jump $S^0_{j_0+5/2}$ is smaller than the second jump $S^0_{j_0+3/2}$ (Figure 8, right). We still have $u^1_{j_0+1/2} = \frac{2a-b}{2}$, and using

Lemma 12, first case both on $\left[j_0+1, j_0+\frac{3}{2}\right]$ and $\left[j_0+\frac{3}{2}, j_0+2\right]$ we obtain $u^1_{j_0+3/2} = \frac{3b-c}{2}$. It follows that

$$S^1_{j_0} = \frac{2a-b}{2} \quad \text{and} \quad S^1_{j_0+1} = \frac{4b-2a-c}{2}.$$

The second jump is larger than the first jump. Indeed, $b-a = S^0_{j_0+3/2} \geq S^0_{j_0+5/2} = c-b$, thus

$$4(b-a) > (c-b) \quad \text{and} \quad \frac{4b-2a-c}{2} \geq \frac{2a-b}{2}.$$

Thus the first point of Lemma 14 gives $u^2_{j_0} = 0$ and $S^2_{j_0-1/2} = 0$. Eventually we bound $S^2_{j_0+1/2} = u^2_{j_0+1}$. Using once again (9) and (10) we obtain

$$\int_{j_0+\frac{1}{2}}^{j_0+1} u^1_{rec} = u^1_{j_0+1/2} = \frac{2a-b}{2} \quad \text{and} \quad \int_{j_0+1}^{j_0+\frac{3}{2}} u^1_{rec} \leq \frac{u^1_{j_0+3/2}}{2} = \frac{3b-c}{4}.$$

We end up with

$$S^2_{j_0+1/2} \leq \frac{4a+b-c}{4} = a - \frac{c-b}{4} \leq S^0_{j_0+1/2} - \frac{\alpha}{4},$$

which concludes the proof.

□

We are now in position to prove the following version of Theorem A. It states that after a finite number of iterations, the process described in Section 1.2 is 2-periodic and at each time step, the sequence contains at most one intermediate value.

Theorem 15. — *Suppose that the initial data $(u^0_j)_{j\in\mathbf{Z}}$ belongs to H^M_α for some $\alpha > 0$ and some integer $M > 0$. Then there exists an integer $p = p(M,\alpha)$ such that for all $n \geq p$, $(u^n_j)_{j\in\mathbf{Z}}$ is in H^2_α or H^1_α, and the solution is 2-periodic: for all $n \geq p$, $u^{n+2}_j = u^n_j$.*

Proof. — In this statement and all along the proof, we make a slight abuse of notation and drop the distinction between odd en even iterations in time, always denoting $(u^n_j)_{j\in\mathbf{Z}}$. Distinguishing between the two cases would only make the notation heavier.

We know by Lemma 14 that for all iteration in time n, there exists an integer M^n such that $(u^n_j)_{n\in\mathbf{Z}}$ belongs to $H^{M^n}_\alpha$. If $M^n = 1$ or $M^n = 2$, α plays no role in the definition of H^M_α. Moreover, there is at most one intermediate value, which lies between 0 and 1. As a consequence, u^n_{rec} is a Heaviside function. It follows that $(u^{n+1}_j)_j$ is the L^2-projection on each cell of this Heaviside function, and thus only the cell containing the discontinuity has a value different from 0 or 1. At the next iteration, $u^{n+1}_{rec} = u^n_{rec}$ and the grid comes back at its initial position, which yields the 2-periodicity in time.

We prove that the number M^n of strictly positive jumps at iteration n reaches 2 after a finite number of iterations. Following Definition 11, we denote by j^n_0 the last cell where u^n_j is null and by $j^n_0 + M^n$ the first cell where u^n_j is 1. Depending on whether the first jump is larger or smaller than the second one, Lemma 14 gives the relation between j^{n+1}_0 and j^n_0. With a similar argument at the right extremity we deduce that M^{n+1} is equal to M^n+1, M^n or M^n-1.

There are four cases that can occur at the extremities. In what follows, L stands for "large jump" and S stands for "small jump" (relatively to each other). The elements of the proof are gathered on Figure 9, where the dots represent the jumps. The inner jumps (in grey) are all larger than α.

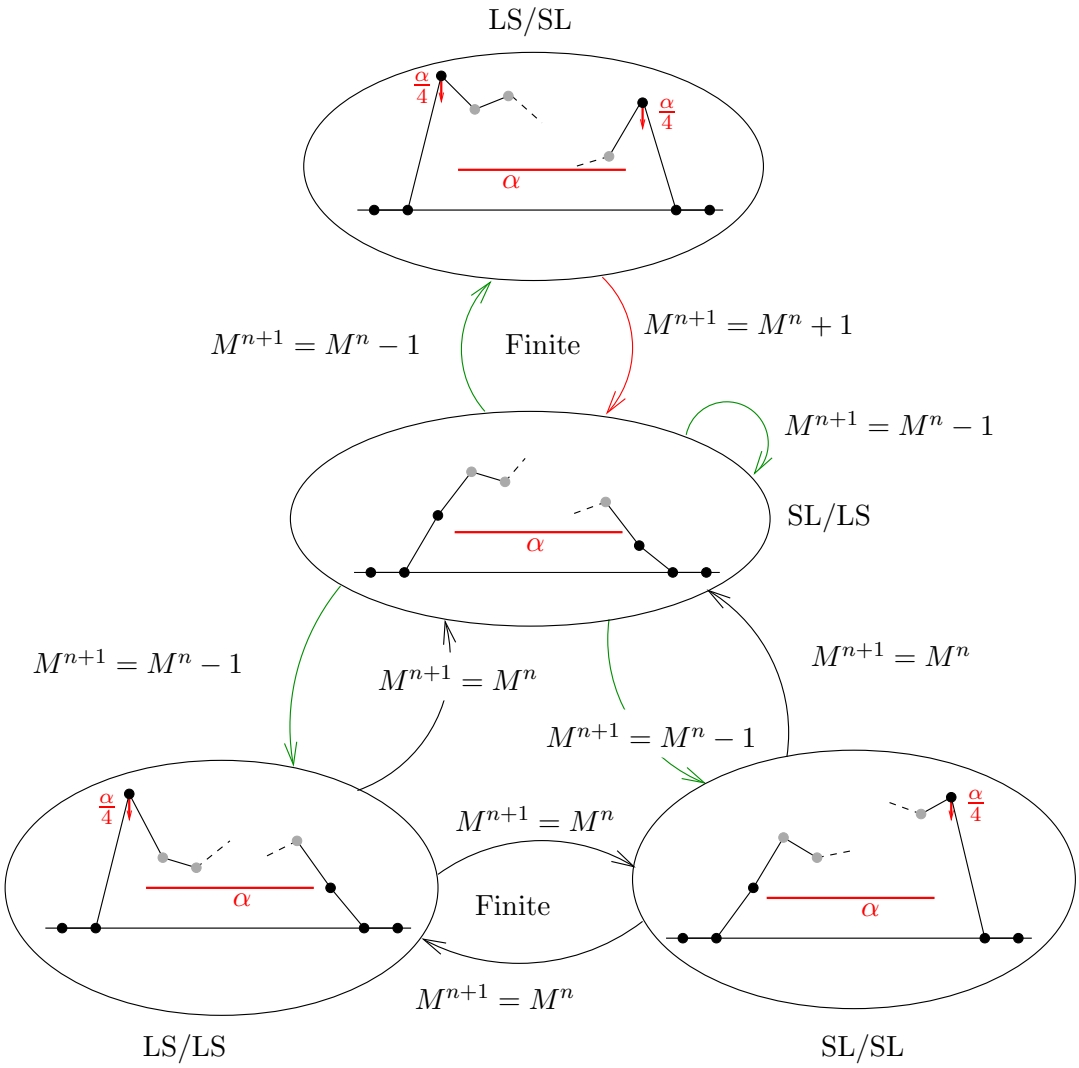

FIGURE 9. Transitions between the four possible configurations at the extremities and evolution of the number M^n of non null jumps.

– **Case LS/SL, Fig. 9, top:** in that case

$$S^n_{j_0^n+1/2} > S^n_{j_0^n+3/2} \quad \text{and} \quad S^n_{j_0^n+M^n-3/2} < S^n_{j_0^n+M^n-1/2},$$

hence (Lemma 14, second case)

$$0 < S^{n+1}_{j_0^n} \leq S^{n+1}_{j_0^n+1} \quad \text{and} \quad 0 < S^{n+1}_{j_0^n+M^n+1} \leq S^{n+1}_{j_0^n+M^n}.$$

Thus the number of non zero jumps increases by 1: $M^{n+1} = M^n + 1$ and the solution at time $n+1$ is in configuration SL/LS.

– **Case SL/LS, Fig. 9, middle:** in that case
$$S^n_{j_0^n+1/2} \le S^n_{j_0^n+3/2} \quad \text{and} \quad S^n_{j_0^n+M^n-3/2} \ge S^n_{j_0^n+M^n-1/2}.$$
By Lemma 14, first case,
$$S^{n+1}_{j_0^n} = 0 \quad \text{and} \quad S^{n+1}_{j_0^n+M^n+1} = 0.$$
The number of non zero jumps decreases by 1: $M^{n+1} = M^n - 1$. We do not have any information on the relative positions of the first and second jump (neither on last and second last) at the iteration $n+1$, and actually the four configurations LS/SL, LS/SL, LS/LS and SL/SL are possible.

– **Case SL/SL, Fig. 9, bottom right:** in that case
$$S^n_{j_0^n+1/2} \le S^n_{j_0^n+3/2} \quad \text{and} \quad S^n_{j_0^n+M^n-3/2} \le S^n_{j_0^n+M^n-1/2}$$
and
$$0 = S^{n+1}_{j_0^n} \quad \text{and} \quad 0 < S^{n+1}_{j_0^n+M^n+1} \le S^{n+1}_{j_0^n+M^n}.$$
It follows that $M^{n+1} = M^n$. At the next iteration in time, we only have information on the last two jumps, so it is possible to end up in situations LS/LS or SL/LS.

– **Case LS/LS, Fig. 9, bottom left:** in that case
$$S^n_{j_0^n+1/2} > S^n_{j_0^n+3/2} \quad \text{and} \quad S^n_{j_0^n+M^n-3/2} \ge S^n_{j_0^n+M^n-1/2}.$$
and
$$0 < S^{n+1}_{j_0^n} \le S^{n+1}_{j_0^n+1} \quad \text{and} \quad 0 = S^{n+1}_{j_0^n+M^n+1}.$$
The number of non zero jump remains unchanged $M^{n+1} = M^n$. At time $n+1$, it is possible to be in cases SL/SL and SL/LS.

Looking at the transitions between the four possible situations on Figure 9, we see that the number of jumps decreases of 1 each time Case SL/LS is left. It remains to prove that this is the most frequent case.

The key element is that it is not possible to cycle indefinitely from case SL/LS to case LS/SL or from case SL/SL to case LS/LS. Indeed, if $S^n_{j_0^n+1/2} > S^n_{j_0^n+3/2}$, then $S^{n+2}_{j_0^{n+2}+1/2} \le S^n_{j_0^n+1/2} - \frac{\alpha}{4}$, see Lemma 14. Thus, the left extreme value decreases of $\frac{\alpha}{4}$ after one cycle, and in particular will be smaller than α after a finite number of cycles (smaller than $4/\alpha + 4$). At this stage, it is necessarily smaller than the first inner jump $S^n_{j_0^n+3/2}$, which is larger than α, thus the solution exits the cycle.

Hence, there exists a first iteration n_0 this time where the scheme is in configuration SL/LS. One sees that $M^n \le M^{n_0}$ for every $n \ge n_0$. Moreover,

– If it visits one of the configurations LS/LS or SL/SL at time $n_0 + 1$, then it goes back in configuration SL/LS for the first time at a time n_1 smaller than $n_0 + 8/\alpha + 8$, which is the maximal time to exit a cycle LS/LS to SL/SL. Every transition preserves the number of jumps, except the first one where it decreases by 1, thus $M^{n_1} < M^{n_0}$.

– If it visits the configuration LS/SL at time $n_0 + 1$, it is followed by a finite succession of at most $4/\alpha + 4$ cycles between SL/LS and LS/SL configurations. Thus, there is a time $n_{1/2} \ge n_0 + 4/\alpha + 4$ where the process is in SL/LS with $M^{n_{1/2}} = M^{n_0}$. At iteration $n_{1/2} + 1$, it is either in configuration SL/LS again,

in which case we set $n_1 = n_{1/2} + 1$ and $M^{n_1} < M^{n_0}$, or it is in configurations LS/LS or SL/SL. The existence of a $n_1 \geq n_0 + 8/\alpha + 8$ such that $M^{n_1} < M^{n_0}$ follows from the first case.

This proves the theorem. □

4. The non symmetric case $\lambda \neq 1/2$

Contrary to the last section, we apply the scheme with parameter $\lambda \in (0, 1/2)$. The grid is shifted alternatively to the left and to the right as explained in Section 1.2. We prove that there is an open set of initial conditions which are 5-configurations (five jumps, four intermediate values, see Definition 11) on which the solutions converge exponentially to a 5-configuration having a size 2 plateau.

We first need some notations. We take $j_0 = 0$, denote $\varepsilon^n = u_3^n - u_2^n$, and

$$u_1^\infty = u_1^0 - \frac{2\lambda - \lambda^2}{1 - 4\lambda^2}\varepsilon^0$$
$$u_2^\infty = u_3^\infty = \frac{1+\lambda}{1+2\lambda}u_2^0 + \frac{\lambda}{1+2\lambda}u_3^0$$
$$u_4^\infty = u_4^0 + \frac{1-\lambda^2}{1-4\lambda^2}\varepsilon^0$$

Theorem 16. — *If (u_j^0) is in a 5-configuration (meaning that it belongs to H_0^5), and if*
(a) $u_2^0 - u_1^0 \geq 2\varepsilon^0$;
(b) $u_1^\infty \geq \lambda u_2^\infty$;
(c) $\lambda(u_4^0 - u_3^0) \geq (1-\lambda)\varepsilon^0$;
(d) $u_4^0 - u_3^0 \geq \lambda(1 - u_3^0)$;
(e) $1 - u_4^\infty \geq (1-\lambda^2)\varepsilon^0$;
then $(u_j^n)_j$ is in a 5-configuration for any $n \geq 0$. Moreover, $(u_j^{2n})_j$ converges uniformly exponentially fast towards the configuration $(u_j^\infty)_j$.

Remark 17. — The set of 5-configurations satisfying (a) to (e) contains a nonempty open set. Indeed, consider any number $v_2 = v_3 \in (0,1)$, and two numbers v_1 and v_4 such that

$$\frac{v_1 - 0}{v_2 - 0}, \frac{v_4 - v_2}{1 - v_2} \in (\lambda, 1)$$

(see Figure 10). In other words, consider the intervals $(0, v_2)$ and $(v_2, 1)$ and divide each of them into two intervals of relative sizes λ and $1-\lambda$; the numbers v_1 and v_4 have to be in the upper respective subintervals. One easily checks that any 5-configuration sufficiently close to the configuration (v_j) satisfies (a) to (e).

Remark 18. — In the limit $\lambda \to 1/2$, Condition (b) gives ε^0 is null. Thus this result is not in contradiction with Section 3, where the inner jumps are strictly positive.

Proof. — We prove by induction the following properties:
- (u_j^{2n}) is in a 5-configuration;
- $\varepsilon^{2n} = (4\lambda^2)^n \varepsilon^0$;

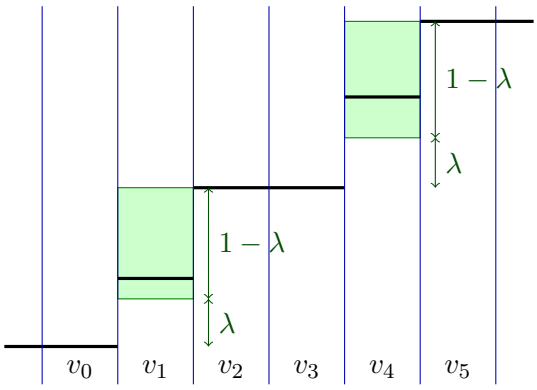

FIGURE 10. One sets $v_0 = 0$, $v_5 = 1$ and chooses $v_2 = v_3 \in (0,1)$. This defines "good" intervals (in green) which are the upper parts of the intervals $(0, v_2)$ and $(v_3, 1)$ of relative lengths $1-\lambda$; the numbers v_1 and v_4 can be chosen anywhere in these intervals.

– and the following bounds on the intermediate values:

$$\begin{aligned}
u_1^{2n} &= (2\lambda - \lambda^2)\frac{1-(4\lambda^2)^n}{1-4\lambda^2}\varepsilon^0 \\
u_2^{2n} &= u_2^0 + (\lambda - 2\lambda^2)\frac{1-(4\lambda^2)^n}{1-4\lambda^2}\varepsilon^0 \\
u_3^{2n} &= u_3^0 - (1-\lambda-2\lambda^2)\frac{1-(4\lambda^2)^n}{1-4\lambda^2}\varepsilon^0 \\
u_4^{2n} &= u_4^0 + (1-\lambda^2)\frac{1-(4\lambda^2)^n}{1-4\lambda^2}\varepsilon^0.
\end{aligned}$$

Configurations satisfying these properties are said to satisfy property (P). In particular, this will prove that the configurations u_j^{2n} are as in Figure 11, since these conditions imply that

$$\begin{aligned}
u_1^\infty \le u_1^{2n} &\le u_1^0 \\
u_2^0 \le u_2^{2n} &\le u_2^\infty \\
u_3^\infty \le u_3^{2n} &\le u_3^0 \\
u_4^0 \le u_4^{2n} &\le u_4^\infty,
\end{aligned}$$

Suppose that a configuration u_j^{2n} satisfies property (P). We want to prove that the configuration u_j^{2n+2} still satisfies property (P).

For odd iteration in time, the grid is shifted to the left and the distance from the right interface is $d_j^{2n} = \dfrac{u_j^{2n} - u_{j-1}^{2n}}{u_{j+1}^{2n} - u_{j-1}^{2n}}$. We repeatedly use the equivalence

$$d_j^{2n} \ge \lambda \quad \Longleftrightarrow (1-\lambda)(u_j^{2n} - u_{j-1}^{2n}) \ge \lambda(u_{j+1}^{2n} - u_j^{2n}).$$

Let us prove that $d_1^{2n} \ge \lambda$, $d_2^{2n} \ge \lambda$, $d_3^{2n} \le \lambda$ and $d_4^{2n} \ge \lambda$. By the hypotheses made on the initial configuration, we have respectively

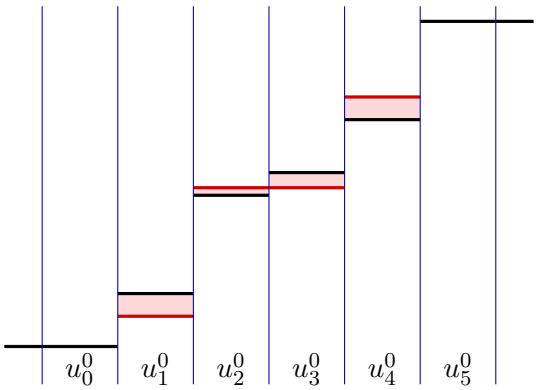

FIGURE 11. The solutions u_j^{2n} all lie in the red domains delimited by the initial configuration u_j^0 (black) and the limit configuration u_j^∞ (red) having a 2 plateau.

- $(1-\lambda)(u_1^{2n}-0) \geq \lambda(u_2^{2n}-u_1^{2n})$ because by Condition (b),
$$(1-\lambda)u_1^{2n} \geq (1-\lambda)u_1^\infty \geq \lambda(u_2^\infty - u_1^\infty) \geq \lambda(u_2^{2n}-u_1^{2n}).$$
- $(1-\lambda)(u_2^{2n}-u_1^{2n}) \geq \lambda\varepsilon^{2n}$ which is true by Condition (a):
$$(1-\lambda)(u_2^{2n}-u_1^{2n}) \geq (1-\lambda)(u_2^0-u_1^0) \geq \lambda\varepsilon^0 \geq \lambda\varepsilon^{2n}.$$
- $(1-\lambda)\varepsilon^{2n} \leq \lambda(u_4^{2n}-u_3^{2n})$ which is true by Condition (c).
- $(1-\lambda)(u_4^{2n}-u_3^{2n}) \geq \lambda(1-u_4^{2n})$ which is true by Condition (d).

In these cases, one can compute $u_{i-\lambda}^{2n+1}$ (using (5)). It is a 5-configuration, with
$$\begin{aligned}
u_{1-\lambda}^{2n+1} &= u_1^{2n} - \lambda u_2^{2n}\\
u_{2-\lambda}^{2n+1} &= u_2^{2n} - \lambda\varepsilon^{2n}\\
u_{3-\lambda}^{2n+1} &= u_2^{2n} + \lambda\varepsilon^{2n}\\
u_{4-\lambda}^{2n+1} &= u_4^{2n} - \lambda(1-u_2^{2n}) + \varepsilon^{2n}
\end{aligned}$$
and in particular,
$$\varepsilon^{2n+1} = 2\lambda\varepsilon^{2n}$$

For the next iteration in time, the grid is shifted to the right, the distance $d_{j-\lambda}^{2n+1} = \dfrac{u_{j+1-\lambda}^{2n+1} - u_{j-\lambda}^{2n+1}}{u_{j+1-\lambda}^{2n+1} - u_{j-1-\lambda}^{2n+1}}$ is counted from the left interface and
$$d_{j-\lambda}^{2n+1} \geq \lambda \quad \Longleftrightarrow (1-\lambda)(u_{j+1-\lambda}^{2n+1} - u_{j-\lambda}^{2n+1}) \geq \lambda(u_{j-\lambda}^{2n+1} - u_{j-1-\lambda}^{2n+1}).$$

Now, we have $d_{1-\lambda}^{2n+1} \geq \lambda$, $d_{2-\lambda}^{2n+1} \leq \lambda$, $d_{3-\lambda}^{2n+1} \geq \lambda$ and $d_{4-\lambda}^{2n+1} \geq \lambda$, because by Hypothesis (P), we have respectively

- $\lambda(u_{1-\lambda}^{2n+1} - 0) \leq (1-\lambda)(u_{2-\lambda}^{2n+1} - u_{1-\lambda}^{2n+1}) \iff u_2^{2n} - u_1^{2n} \geq (\lambda-\lambda^2)\varepsilon^{2n}$ which is true by condition (a);
- $\lambda(u_{2-\lambda}^{2n+1} - u_{1-\lambda}^{2n+1}) \geq (1-\lambda)\varepsilon^{2n+1} \iff u_2^{2n} - u_1^{2n} + \lambda u_2^{2n} \geq (2-\lambda)\varepsilon^{2n}$ which is true by condition (a);

- $\lambda\varepsilon^{2n+1} \leq (1-\lambda)(u_{4-\lambda}^{2n+1} - u_{3-\lambda}^{2n+1}) \iff \lambda(1-\lambda)(1-u_4^{2n}) \leq (2-4\lambda)\varepsilon^{2n} + (1-\lambda)^2(u_4^{2n} - u_3^{2n})$ which is true by condition (d);
- $\lambda(u_{4-\lambda}^{2n+1} - u_{3-\lambda}^{2n+1}) \leq (1-\lambda)(1-u_{4-\lambda}^{2n+1}) \iff (1-\lambda^2)\varepsilon^{2n} \leq 1-u_4^{2n}$ which is true by condition (e).

These conditions allow to compute the sequence u_j^{n+2}:

$$\begin{aligned}
u_1^{2n+2} &= u_1^{2n+1} + \lambda u_2^{2n+1} - (1-\lambda)\varepsilon^{2n+1}\\
u_2^{2n+2} &= u_3^{2n+1} - \lambda\varepsilon^{2n+1}\\
u_3^{2n+2} &= u_3^{2n+1} + \lambda\varepsilon^{2n+1}\\
u_4^{2n+2} &= u_4^{2n+1} + \lambda(1-u_3^{2n+1})
\end{aligned}$$

thus

$$\begin{aligned}
u_1^{2n+2} &= u_1^{2n} - (2\lambda-\lambda^2)\varepsilon^{2n}\\
u_2^{2n+2} &= u_2^{2n} + (\lambda-2\lambda^2)\varepsilon^{2n}\\
u_3^{2n+2} &= u_3^{2n} - (1-\lambda-2\lambda^2)\varepsilon^{2n}\\
u_4^{2n+2} &= u_4^{2n} + (1-\lambda^2)\varepsilon^{2n}
\end{aligned}$$

and in particular

$$\varepsilon^{2n+2} = 4\lambda^2\varepsilon^{2n}.$$

The asymptotic values are easily deduced from this fact and the previous expressions. □

As a conclusion, let us mention that on general initial data, we observe numerically that the sequence $(u_j^n)_{j\in\mathbf{R}}$ quickly goes from its initial state to some "stairshaped" organization. In particular, we observe an exponential convergence of the smaller jumps, as illustrated on Figure 12.

Appendix A. Decomposition of the initial data

We restrict our attention to nondecreasing initial data. This property is inherited at each time step. This result is more general than Lemma 12, where $\lambda = 1/2$.

Lemma 19. — *Suppose that $x \mapsto u^n(x)$ is nondecreasing. Then $x \mapsto u^{n+1}(x)$ is also nondecreasing.*

Proof. — Suppose that n is even. Let us denote by u_{rec}^n the reconstruction map, which is increasing within each cell $[j-1/2, j+1/2]$. Then the mean value function

$$r \mapsto \frac{1}{r}\int_{j-1/2}^{j-1/2+r} u_{rec}^n(x)\,dx$$

increases on $(0,1)$ from u_{j-1}^n for $r=0$ to u_j^n for $r=1$, and in particular,

$$2\int_{j-\frac{1}{2}}^{j} u_{rec}^n(x)dx \in \left[u_{j-1}^n, u_j^n\right].$$

One equally proves that the mean of u_{rec}^n on $[j-1/2-r, j-1/2]$, $r\in(0,1)$ belongs to $[u_{j-1}^n, u_j^n]$. Thus, the mean of u_{rec}^n on $\mathcal{C}_{j-\lambda}$ belongs to $[u_{j-1}^n, u_j^n]$, in other words

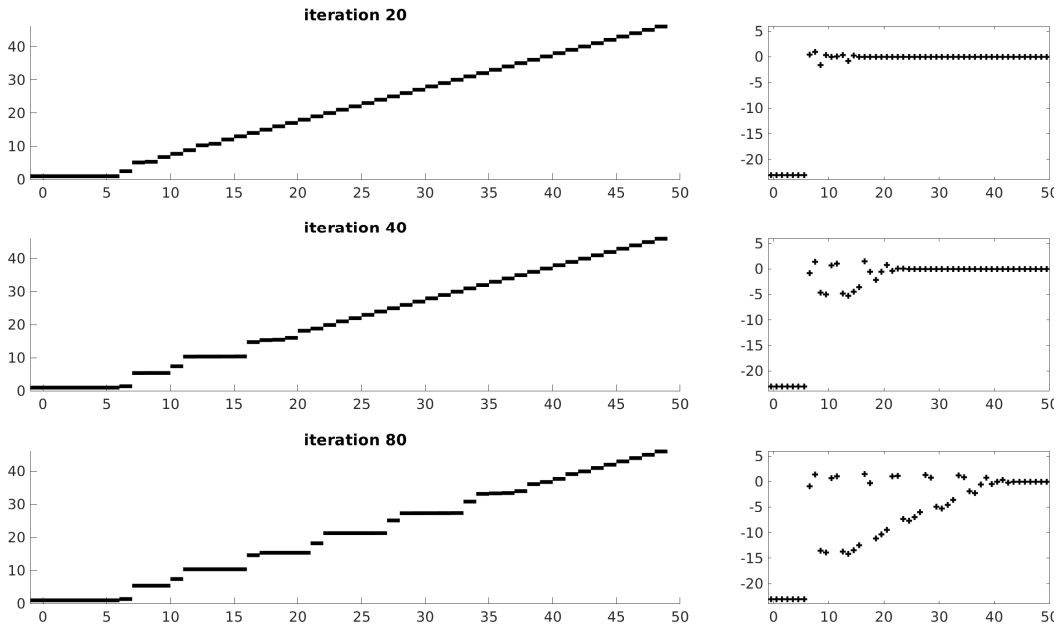

FIGURE 12. Left: apparition of large plateaus when the initial data is a half infinite staircase and $\lambda = 0.4$. Right: height of the jumps in log-scale; we observe an exponential convergence as in Proposition 16.

$u^{n+1}_{j-\lambda} \in [u^n_{j-1}, u^n_j]$ which is smaller than $u^{n+1}_{j+1-\lambda} \in [u^n_j, u^n_{j+1}]$. When n is odd, we similarly prove that u^{n+1}_j belongs to $[u^n_{j-\lambda}, u^n_{j+1-\lambda}]$. □

The general case follows from the study of the nondecreasing one, as explained by the following lemma.

Lemma 20. — *Suppose that $(u^0_j)_{j\in\mathbf{Z}}$ is given. Without loss of generality, we suppose that $u^0_0 = 0$. Let us define $(v^0_j)_{j\in\mathbf{Z}}$, $(w^0_j)_{j\in\mathbf{Z}}$ by $v^0_0 = w^0_0 = 0$ and, for any $j \in \mathbf{Z}$,*

$$v^0_{j+1} - v^0_j = \left(u^0_{j+1} - u^0_j\right)_+$$
$$w^0_{j+1} - w^0_j = \left(u^0_{j+1} - u^0_j\right)_-$$

Then for all $n \geq 0$,

$$\left(u^n_{j-\lambda(n \bmod 2)}\right)_{j\in\mathbf{Z}} = \left(v^n_{j-\lambda(n \bmod 2)}\right)_{j\in\mathbf{Z}} + \left(w^n_{j-\lambda(n \bmod 2)}\right)_{j\in\mathbf{Z}}.$$

Proof. — The proof boils down to show that for all n, $u^n_{rec} = v^n_{rec} + w^n_{rec}$. Let us prove it for $n = 0$. We distinguish cases depending on the relative positions of u^0_{j-1}, u^0_j and u^0_{j+1}.

– If $u^0_{j-1} = u^0_j = u^0_{j+1}$, the reconstruction on cell $\mathcal{C}_j$ is constant equal to u^0_j. It is clear that $v^0_{j-1} = v^0_j = v^0_{j+1}$ and $w^0_{j-1} = w^0_j = w^0_{j+1}$, and thus

$$(v^0_{rec})_{|\mathcal{C}_j} + (w^0_{rec})_{|\mathcal{C}_j} = v^0_j + w^0_j = u^0_j = (u^0_{rec})_{|\mathcal{C}_j}.$$

– If $u^0_{j-1} \leq u^0_j \leq u^0_{j+1}$ with one strict inequality, a discontinuity is reconstructed in cell $\mathcal{C}_j$ at a distance $d^0_j = \frac{u^0_j - u^0_{j-1}}{u^0_{j+1} - u^0_{j-1}}$ of the right interface and

$$(u^0_{rec})_{|\mathcal{C}_j}(x) = u^0_{j-1}\mathbf{1}_{[j-1/2, j+1/2-d^0_j]}(x) + u^0_{j+1}\mathbf{1}_{[j+1/2-d^0_j, j+1/2]}(x).$$

In this case we have

$$(v^0_{j-1}, v^0_j, v^0_{j+1}) = (v^0_j - u^0_j)(1,1,1) + (u^0_{j-1}, u^0_j, u^0_{j+1})$$

and thus $(v^0_{rec})_{|\mathcal{C}_j} = v^0_j - u^0_j + (u^0_{rec})_{|\mathcal{C}_j}$. Moreover $w^0_{j-1} = w^0_j = w^0_{j+1}$, thus $(w^0_{rec})_{|\mathcal{C}_j} = w^0_j$ and the results follows.

– If $u^0_{j-1} \geq u^0_j$ and $u^0_j \leq u^0_{j+1}$ with one strict inequality, then d^0_j does not belong to $(0,1)$ and thus $(u^0_{rec})_{|\mathcal{C}_j} = u^0_j$. On the other hand $v^0_{j-1} = v^0_j$ and $w^0_j = w^0_{j+1}$ which yields $(v^0_{rec})_{|\mathcal{C}_j} = v^0_j$ and $(w^0_{rec})_{|\mathcal{C}_j} = w^0_j$.

– The other cases are treated similarly by exchanging the roles of v and w.

□

Appendix B. Half infinite staircase with steps of equal heights

We now consider staircase-like initial data for the symmetric case $\lambda = 1/2$. It once again illustrates the importance of the behavior at extremities. We say that $(u^n_j)_j$ satisfies Hypothesis (H') if, up to a horizontal translation,

1. $(u^n_j)_j$ is constant on $\{j \leq 0\}$, i.e. for any $j \leq 0$, $S^n_{j-1/2} = 0$;
2. for any $j \geq 3$, we have $S^n_{j-1/2} = 1$;
3. $S^n_{3/2} \geq 1$;
4. $S^n_{1/2} \geq 0$.

As before, we consider here an even time n, the odd case being identical (up to a shift of 1/2 in the notations).

The following proposition expresses that if the initial condition satisfies Hypothesis (H'), then the solution will satisfy Hypothesis (H') at all time, and the total height of the two first steps will tend to infinity as the time goes to infinity.

Proposition 21. — *If $(u^n_j)_j$ satisfies Hypothesis* (H'), *then so does $(u^{n+1}_{j-1/2})_j$. Moreover, one has, $S^n_1 + S^n_2 \to \infty$.*

This proposition is illustrated on Figure 13: the first step falls down at each iteration, until it disappears. This is very different from the apparition of plateaus of size larger than $3\Delta x$ when $\lambda \neq 1/2$, illustrated on Figure 12 (note that the number of iterations are different in those two simulations).

Proof. — We first prove the first part of the proposition.

Of course, Hypothesis (1) of (H') is still satisfied at time $n+1$. As $S^n_{5/2} = 1$, Equation (4) gives:

$$d^n_1 = \frac{S^n_{1/2}}{S^n_{1/2} + S^n_{3/2}} \qquad \text{and} \qquad d^n_2 = \frac{S^n_{3/2}}{1 + S^n_{3/2}}$$

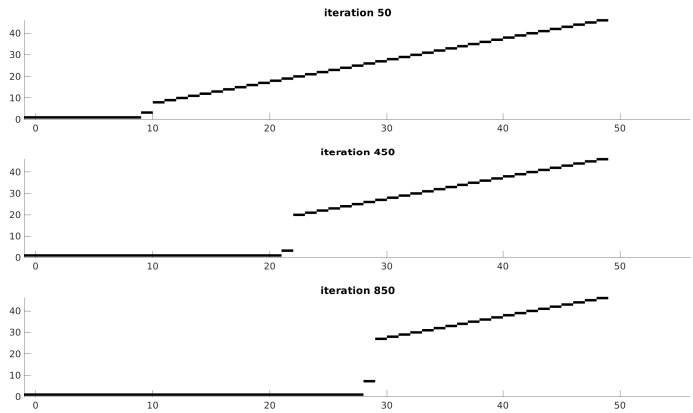

FIGURE 13. Numerical solution after 50, 450 and 850 iterations when the initial data is a half infinite staircase and $\lambda = 0.5$

By Hypothesis (3) of (H'), we have $d_2^n \geq 1/2$. Then the expression of the reconstruction depends on the sign of $d_1^n - 1/2$. We have two cases:

(i) $d_1^n \geq 1/2 \iff S_{1/2}^n \geq S_{3/2}^n$. In this case, a computation leads to

$$u_{1/2}^{n+1} = \frac{S_{1/2}^n - S_{3/2}^n}{2}, \qquad u_{3/2}^{n+1} = u_2^n - \frac{1}{2},$$

and for $j \geq 2$, $u_{j+1/2}^{n+1} = \frac{u_j^n + u_{j+1}^n}{2}$. So Hypothesis (2) of (H') is satisfied at step $n+1$. Moreover

$$S_0^{n+1} = \frac{S_{1/2}^n - S_{3/2}^n}{2} \quad \text{and} \quad S_1^{n+1} = \frac{3S_{3/2}^n + S_{1/2}^n - 1}{2}$$

and using that $S_{1/2}^n \geq S_{3/2}^n \geq 1$, we get that $S_1^{n+1} \geq 3/2$, so Hypothesis (3) is satisfied at step $n+1$.

Remark that in this case, we have

$$S_0^{n+1} - S_1^{n+1} = \frac{1 - 4S_{3/2}^n}{2} \leq -\frac{3}{2}, \tag{12}$$

so $S_1^{n+1} < S_2^{n+1}$. In other words if case (i) occurs at time n, then it occurs case (ii) at time $n+1$.

(ii) $d_1^n \leq 1/2 \iff S_{1/2}^n \leq S_{3/2}^n$. In this case,

$$u_{1/2}^{n+1} = 0, \qquad u_{3/2}^{n+1} = \frac{2u_1^n + u_2^n - 1}{2},$$

and for $j \geq 2$, $u_{j+1/2}^{n+1} = \frac{u_j^n + u_{j+1}^n}{2}$. Hypothesis (2) is immediately satisfied. Thus we have

$$S_1^{n+1} = \frac{3S_{1/2}^n + S_{3/2}^n - 1}{2} \quad \text{and} \quad S_2^{n+1} = \frac{S_2^n - S_1^n}{2} + 1 \geq 1$$

so Hypothesis (3) is satisfied.

Let us now prove the second part of the proposition. A simple computation gives the sum of the two first jumps

$$\begin{cases} S_0^{n+1} + S_1^{n+1} = S_{1/2}^n + S_{3/2}^n - \frac{1}{2} & \text{in case (i)} \\ S_1^{n+1} + S_2^{n+1} = S_{1/2}^n + S_{3/2}^n + \frac{1}{2} & \text{in case (ii)} \end{cases}$$

By (12), if at time n we are in case (i), then at time $n+1$ we have to be in case (ii). So the sequence $(S_1^{2n} + S_2^{2n})_n$ is increasing. To prove that it tends to $+\infty$, we only have to prove that there are infinitely times $m \in \mathbf{N}$ such that at both times m and $m+1$ we are in case (ii).

If at time n we are in case (i), then at time $n+1$ case (ii) occurs and a simple computation leads to

$$S_1^{n+2} = S_1^n - \frac{3}{4} \qquad \text{and} \qquad S_2^{n+2} = S_2^n + \frac{3}{4},$$

in particular

$$S_1^{n+2} - S_2^{n+2} = S_1^n - S_2^n - \frac{3}{2}.$$

Thus, by a straightforward induction, for any integer $k \leq k_0$, where

$$k_0 = \left\lfloor \frac{2}{3}\big(S_1^n - S_2^n\big) \right\rfloor,$$

we are in case (i) in time $n+2k$ and in case (ii) in time $n+2k+1$, while we are again in case (ii) in time $n+2k_0+2$. In other words, for any $n \in \mathbf{N}$, we have found a time $m > n$ such that at both times m and $m+1$ we are in case (ii).

□

References

[BCLL08] B. Boutin, C. Chalons, F. Lagoutière & P. G. LeFloch – "Convergent and conservative schemes for nonclassical solutions based on kinetic relations. I", *Interfaces Free Bound.* **10** (2008), no. 3, p. 399–421.

[Boh47] H. Bohr – *Almost Periodic Functions*, Chelsea Publishing Company, New York, N.Y., 1947.

[Des08a] B. Després – "Finite volume transport schemes", *Numer. Math.* **108** (2008), no. 4, p. 529–556.

[Des08b] ———, "Stability of high order finite volume schemes for the 1D transport equation", in *Finite volumes for complex applications V*, ISTE, London, 2008, p. 337–342.

[DL01] B. Després & F. Lagoutière – "Contact discontinuity capturing schemes for linear advection and compressible gas dynamics", *J. Sci. Comput.* **16** (2001), no. 4, p. 479–524 (2002).

[LeV92] R. J. LeVeque – *Numerical methods for conservation laws*, second ed., Lectures in Mathematics ETH Zürich, Birkhäuser Verlag, Basel, 1992.

[Mil85a] J. Milnor – "Correction and remarks: "On the concept of attractor"", *Comm. Math. Phys.* **102** (1985), no. 3, p. 517–519.

[Mil85b] ———, "On the concept of attractor", *Comm. Math. Phys.* **99** (1985), no. 2, p. 177–195.

[Mil06] ———, "Attractor", *Scholarpedia* **1** (2006), no. 11, p. 1815, revision #186525.

Nina Aguillon • *E-mail :* nina.aguillon@sorbonne-universite.fr, Sorbonne-Université, CNRS, Université de Paris, INRIA, Laboratoire Jacques-Louis Lions (LJLL), équipe ANGE, F-75005 Paris, France

Pierre-Antoine Guihéneuf • *E-mail :* pierre-antoine.guiheneuf@imj-prg.fr, Sorbonne Université, Université Paris Diderot, CNRS, Institut de Mathématiques de Jussieu-Paris Rive Gauche, IMJ-PRG, F-75005, Paris, France