HAL
open science

Analysis and comparison of end effects in linear switched reluctance and hybrid motors

El Manaa Barhoumi, Ahmed Gala Abo-Khalil, Youcef Berrouche, Frederic Wurtz

To cite this version:

El Manaa Barhoumi, Ahmed Gala Abo-Khalil, Youcef Berrouche, Frederic Wurtz. Analysis and comparison of end effects in linear switched reluctance and hybrid motors. Journal of Electrical Engineering-Elektrotechnicky Casopis, 2017, 68 (2), pp.138–142. 10.1515/jee-2017-0019 . hal-02277799

HAL Id: hal-02277799

https://hal.science/hal-02277799

Submitted on 8 Jun 2021

HAL is a multi-disciplinary open access archive for the deposit and dissemination of scientific research documents, whether they are published or not. The documents may come from teaching and research institutions in France or abroad, or from public or private research centers.

L'archive ouverte pluridisciplinaire **HAL**, est destinée au dépôt et à la diffusion de documents scientifiques de niveau recherche, publiés ou non, émanant des établissements d'enseignement et de recherche français ou étrangers, des laboratoires publics ou privés.

DE GRUYTER OPEN

Journal of ELECTRICAL ENGINEERING, VOL 68 (2017), NO2, 138–142

Analysis and comparison of end effects in linear switched reluctance and hybrid motors

El Manaa Barhoumi, [*, **] **Ahmed Galal Abo-Khalil,** [*, ****]
Youcef Berrouche, [*] **Frederic Wurtz** [***]

This paper presents and discusses the longitudinal and transversal end effects which affects the propulsive force of linear motors. Generally, the modeling of linear machine considers the forces distortion due to the specific geometry of linear actuators. The insertion of permanent magnets on the stator allows improving the propulsive force produced by switched reluctance linear motors. Also, the inserted permanent magnets in the hybrid structure allow reducing considerably the ends effects observed in linear motors. The analysis was conducted using 2D and 3D finite elements method. The permanent magnet reinforces the flux produced by the winding and reorients it which allows modifying the impact of end effects. Presented simulations and discussions show the importance of this study to characterize the end effects in two different linear motors.

K e y w o r d s: linear switched reluctance motor, hybrid motor, finite element method analysis, end effects

1 Introduction

The linear switched reluctance MOTORS (LSRM)s and the linear hybrid motors are becoming very attractive actuators in recent decade. Moreover, LSRM serves more advantages than other rotary electrical machines, particularly in linear industrial applications. Resulting in simpler conversion of electrical input to linear motion, the LSRM have been used in conveyor system, sliding doors, airport baggage and rope-less elevator [1–4]. These machines eliminate the need of mechanical movement transformation interfaces for rotary to linear. Using LSRM, additional benefits of performances and reliability are obtained.

Many advantages make that the LSRM more attractive candidate for applications requiring precise linear motion. Firstly, the LSRM provides direct solution on the motion control with precise specifications. On the other hand, the simplicity on the construction of the LSRM added to the robustness and high power densities make it more attractive for many industry applications requiring linear displacement during the last decade [5, 6]. Since no magnet is installed in both the mobile part and the stator added to the absence of copper windings on the mobile part, the LSRM reliability is considered very improved compared to others electric motors used in the drive applications. The FEM have been used over the last few years in the design of electrical machines. These methods are preferred because they give a good agreement with the experimental measurements. Hence, the FEM is used in this work to quantify and evaluate the ends effect of the produced forces of the LSRM [5].

Increasing the LSRM force is desirable. In order to achieve this objective, improvement in mechanical structure of LSRM was proposed and studied in most research works. However, the improvement of LSRM construction is not possible due to the difficulty in construction when a permanent magnet is added or a novel shape of primary is used. Particularly, when the desirable force is important, the thickness of the mobile part is considered significant. Consequently, the mass of the mobile part increases and dynamic characteristics of the machine are affected. The references show that added steel and higher length of some dimensions does not have any improvement in the force profile. Hence, reducing some dimensions of the linear machine allows keeping the same propulsion forces. A second solution was used to improve the propulsive force of linear actuator consists in addition of permanent magnet in both translator and stator structures. The studies of the end effects in linear SRM and HM consider the same hypothesis. However, the added permanent magnet affects the magnetic flux distribution and consequently the propulsive force and the transversal and longitudinal end effects.

The aim of this paper is to study the phenomena of the longitudinal and transversal end effects in both switched reluctance and linear hybrid machines. A 3D view of the LSRM is shown in Fig. 1.

This paper is organized as follows. Section 2 is concentrated to the analysis of end effects in LSRM. Section 3 is

[*] Department of Electrical Engineering, College of Engineering, Majmaah University, 11952, Saudi Arabia, [**] Universit de Tunis El Manar, Ecole Nationale dIngnieurs de Tunis, Laboratoire Analyse, Conception et Commande des Systmes (LR11ES20), [***] Université Grenoble Alpes, G2Elab, F-38000 Grenoble, France CNRS, G2Elab, F-38000 Grenoble, France, [****] Assuit University, Egypt, e.barhoumi@mu.edu.sa

DOI: 10.1515/jee-2017–0019, Print (till 2015) ISSN 1335-3632, On-line ISSN 1339-309X © 2017FEI STU

Table 1. LSRM Design Specifications

Quantity	Symbol	Values (mm)
Tooth width	T_{w}	50
Air gap width	e	1
Translator thickness	T_{t}	300
Translator pole length	T_{pl}	50
Translator cylinder head	T_{ch}	50

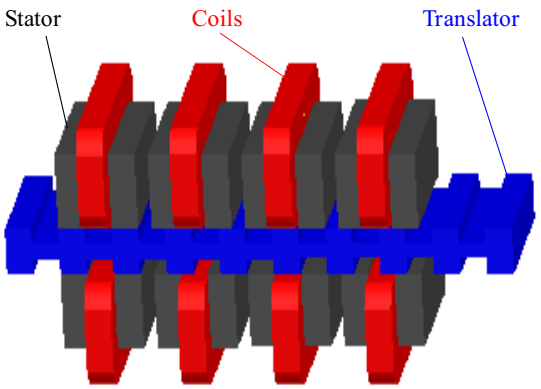

Fig. 1. 3D view of the LSRM

concentrated to the analysis of the Hybrid motor. Conclusion and perspectives are summarized in Section 4. The double sided LSRM mechanical dimensions are summarized in Table 1.

2 Analysis of end effects in linear switched reluctance motor

2.1 Longitudinal end effects

To design a LSRM structure, the 2D FEM is usually used to calculate the performances of the proposed structures. In particular, when the structure presents some symetries, this method is preferred by the most engineers and researchers. To simplify the calculation time, elementary structure can be considred to modelise and calculate the parameters of the machine. However, in linear machine, the flux lines distribution and the magnetic induction depends on the position of the excited phase. Figure 2 shows the distribution of flux lines when only the extrem right phase is excited. It is clear that the adjacent phase affects the magnetic flux distribution. If a central phase is excited, the magnetic flux distribution is affected by the two adjacents phases. This phenomen is called longitudnal end effects.

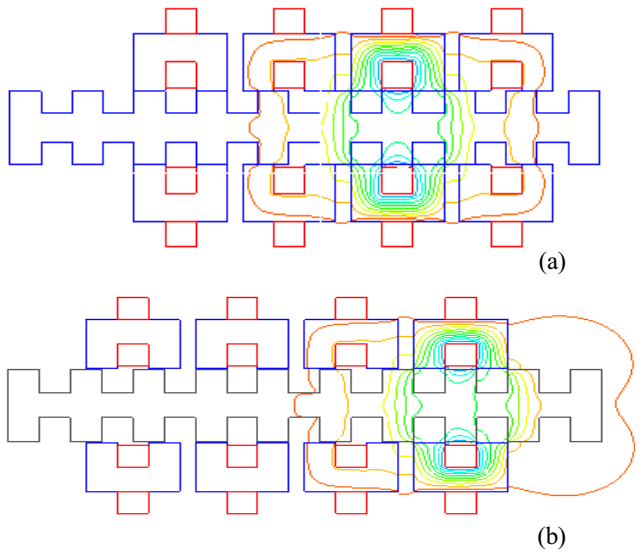

Fig. 2. Magnetic flux distribution in LSRM

The longitudinal end effects conduct to the distortion of the produced propulsive forces. Figure 3 shows the static forces produced by the LSRM when successively the four phases are excited. The forces produced by the extreme phases are more superior than the forces produced by the central phases. Hence the maximum produced force depends to the position of the excited phase. On the other hand, these results show the necessity of the analysis of the full structure to determine the nominal produced force by the machine.

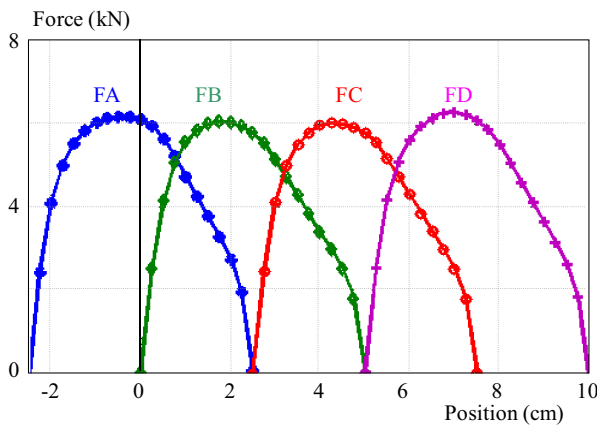

Fig. 3. Propulsive forces generated by the LSRM

Based on these results, the analysis of an elementary structure will be considered insufficient to determine the performances of the machine.

2.2 Transversal end effects

The transversal end effect in linear machine affects considerably the developed propulsive force for all excited phases of the actuator. The magnetic co energy is calculated using

$$W_{3\mathrm{D}}(x,I)\frac{1}{2}\int\limits_{\mathrm{Vol}} B\,\mathrm{d}H\,\mathrm{d}V\,, \tag{1}$$

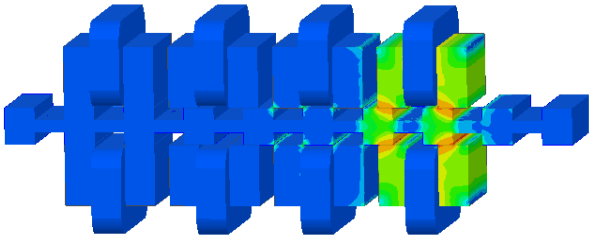

Fig. 4. 3D Analysis of the LSRM

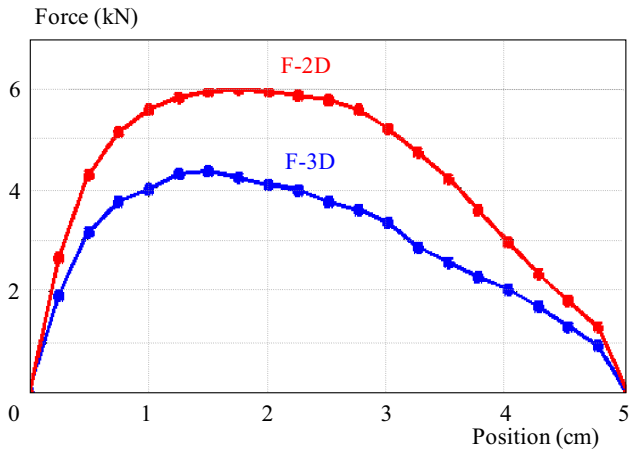

Fig. 5. 3D an 2D forces for the LSRM

where
H is the magnetic field,
B is the magnetic flux density.

The software performs a static magnetic field solution. It computes the model's H field using the current density as a source. For the hybrid structure, permanent magnet serves also as a source.

The obtained force is calculated using flux in 3D analysis as given by

$$F_{3D} = \left.\frac{\partial W_{3D}(x, I)}{\partial x}\right|_{I=cste}. \tag{2}$$

Figure 4 shows the magnetic flux distribution with 3D FEM analysis. Uniform magnetic flux distribution is observed in transversal direction. This is due essentially to the effect of end winding which is considered negligible in the 2D analysis.

The influence of the end effects on the propulsion force is clearly shown in Fig. 5.

Table 2. shows a comparison of the 2D and 3D analysis. The advantage of the 3D analysis is to obtain an estimated force with minimum error. However, the 3D method takes longer time to solve the problem.

An important error is shown in the propulsive forces. Consequently, the 2D method can be considered just for preliminary analysis and design of these types of linear machines. Indeed, the maximum force decreases allowing the decrease of the intersection between the consecutively excited phases.

3 Analysis of end effects in linear hybrid motors

The (LHM) is proposed in aim to increase the propulsive force developed. Hence, the actuator is designed and analyzed using both 2D and 3D in this section. The LHM is characterized by the same geometric parameters of the LSRM, we have only inserted permanent magnet in the stator teeth. Figure 6 shows a 3D view of the linear hybrid motor.

Table 2. 3D and 2D comparaison

	2D	3D
Maximum force	6000 N	4200 N
Solving Time	300 s	3600 s

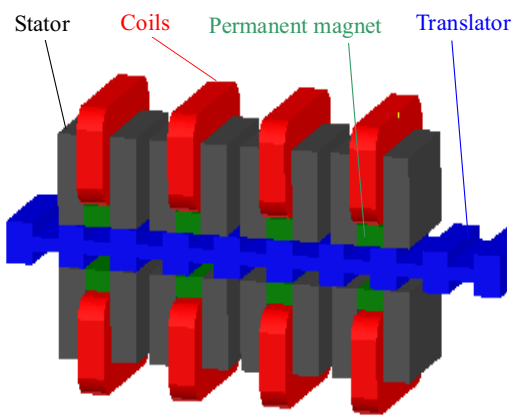

Fig. 6. 3D view of the LHM

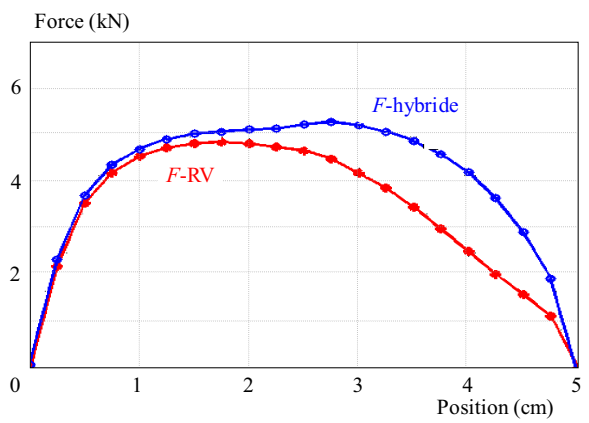

Fig. 7. Propulsive force of LHM and LSRM

The insertion of the permanent magnet allows improving the propulsive force developed by the actuator. Figure 7 shows the forces produced by the two actuators in the same conditions.

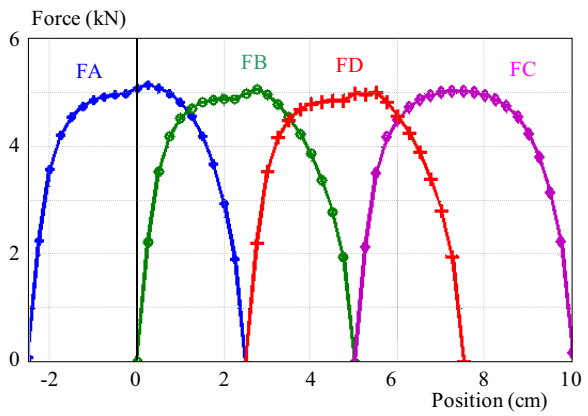

Fig. 8. Propulsive forces developed by the LHM

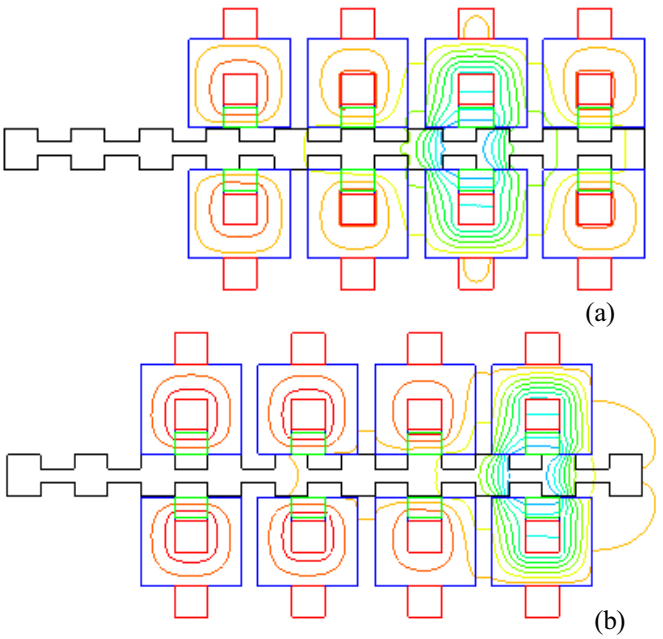

Fig. 9. Magnetic flux distribution in LHM

Using permanent magnet allows to increase the produced flux. The co energie increase and consequently the propulsive force is improved. The flux in LHM is given by

$$\Phi_{\mathrm{LHM}} = \Phi_{\mathrm{LSRM}} + \Phi_{\mathrm{PermanetMagnet}} \,. \tag{3}$$

3.1 Longitudinal end effects

To study the effect of the phase emplacement, the forces generated are calculated for each phase separately. The results presented in Fig. 8 show a small difference in the generated forces. The maximum force is considered the same.

The effect of the permanent magnet is shown on the propulsive forces. The conclusion is that the longitidunal end effect is different from LSRM and LHM. Hence, analytical approach for modeling longitudinal end effects should be developed for each machine. The increase of the current excitation allows showing clearly the longitudinal end effects for LHM. The magnetic flux distribution for the LHM is presented in Fig. 9.

3.2 Transversal end effects

To study the transversal end effect in LHM, 3D finite element method was used. Figure 10 shows the magnetic flux distribution on the 3D structure. A transversal section is presented in Fig. 11. The magnetic flux is affected by the permanent magnets inserted on the stator teeth. A small quantity of magnetic flux circulates out the structure. Consequently, a small variation on the inductance and the produced force is obtained. We can show the big difference between the end effects in LSRM and Hybrid motors.

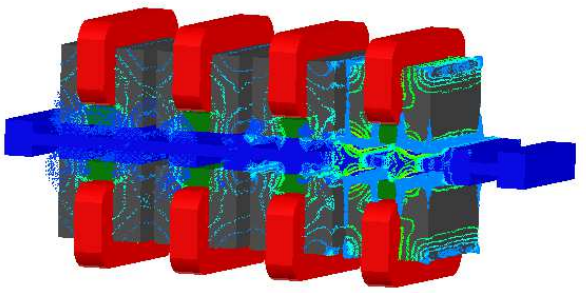

Fig. 10. Magnetic flux distribution in LHM

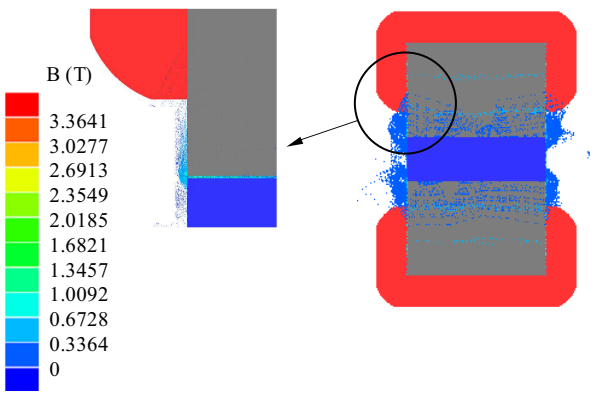

Fig. 11. Magnetic flux distribution-transversal section of the LHM

The inductance calculated using the both 2D and 3D is shown in Fig.12 The inductance obtained with 2D is less than the inductance obtained with 3D. Moreover, the 3D model takes in account the end windings in the calculus of the total inductance. The inductance calculated using 3D model is given by

$$L_{3\mathrm{D}}(x, I) = L_{2\mathrm{D}}(x, I) + L_{\mathrm{End\,Winding}}(x, I) \,. \tag{4}$$

The force is expressed as function of the inductance by

$$F_{em}(i, x) = \frac{1}{2} \frac{\partial L_{3\mathrm{D}}(x, i)}{\partial x} \, i^2 \,. \tag{5}$$

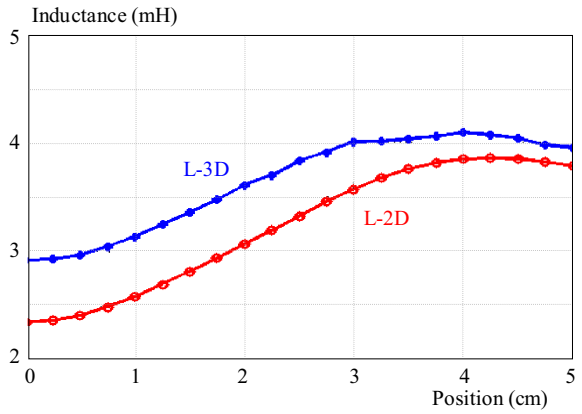

Fig. 12. 3D and 2D inductances of the LHM

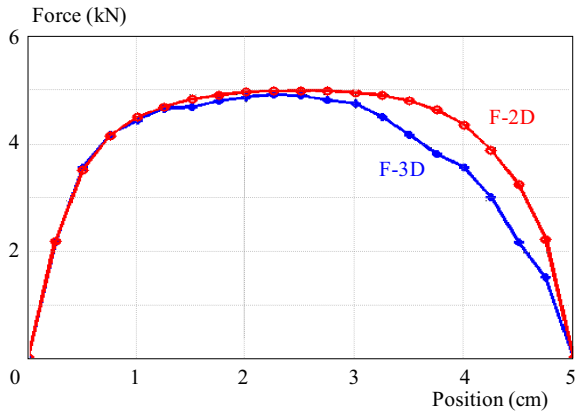

Fig. 13. Difference between thermal resistance of both chips for all structure

The influence of the end effects on the propulsion force is clearly shown in Fig. 13.

4 Discussion

The presented studies concern the analysis of the end effects in both switched reluctance and hybrid motors. The FEM analysis shows the necessity of the 3D model for computing the produced forces. Indeed, the 3D analysis shows a distortion forces in both hybrid and switched reluctances structure due to the magnetic flux distribution not taken in account in the 2D analysis. However, in the early steps of the design process, analytical methods stay efficient. The analytical models are suggested in first steps of conception process. Indeed, the presented results in [2] and [6] show the efficiency of reluctance network model to determine the principal parameters of the actuator. However, the 3D analysis must be integrated. Indeed, the FEM allows validating the design using analytical methods. Every time, the obtained results with FEM are more precise than those obtained with analytical methods. On the other hand, the FEM is used in the optimization process with minimum variable parameters. Indeed, the increase of the parameters number increases the solving time. Hence, this method will be used in the optimization of some specific parameters. The all other parameters of the actuator should be determined with the analytical methods. In the case of linear machine, the FEM method is used to validate the existence of the end effects. Important result was discovered consist on the variation of these effects from each structure to another.

5 Conclusion

Longitudinal and transversal end effects are presented and analyzed in this paper. 3D finite element method is required to obtain precise results. The conducted study shows that end effects depend to the studied machines. Consequently, the developed analytical model cannot be applied for others machines. The authors suggest using 3D model for modeling and design of this type of actuators. The simulation results presented and discussed confirm the analysis of end effects in linear machines.

Acknowledgement

This work is supported by Scientific research deanship at Majmaah University, Saudi Arabia under the contract number 37/58.

References

[1] R. Krishnan *Switched Reluctance Motor Drives Modeling Simulation Analysis Design and applications*, CRC press LLC, 2001.

[2] B. Du Peloux, L. Gerbaud, F. Wurtz, V. Leconte and F. Dorschner, "Automatic Generation of Sizing Static Models Based on Reluctance Networks for the Optimization of Electromagnetic Devices", *IEEE Trans. Magn.*, vol. 42, no. 4, April 2006.

[3] T. Raminosoa, I. Rasoanarivo, F. Meibody-Tabar, and F. M. Sargos, "Time stepping simulation of sync. reluctance motor using a nonlinear reluctance network method", *IEEE Trans. Magn.* vol. 44, no. 12, pp. 46184625, December 2008.

[4] H. Nguyen-Xuan, H. Dogan, S. Perez, L. Gerbaud, L. Garbuio, and F. Wurtz, "Efficient Reluctance Network Formulation for Electrical Machine Design Using Optimization", *IEEE Trans. Magn.*, vol. 50, no. 2, February 2014.

[5] E. M. Barhoumi, M. Hajji and B. Ben Salah, "Design of a double stator linear switched reluctance motor for shunting the railways channels," *Turkish Journal of Electrical Engineering & Computer Sciences*, vol.2 no. 22, February 2014.

[6] E. M. Barhoumi, F. Wurtz, C. Chillet, B. Ben Salah, and O. Chadebec, "Efficient Reluctance Network Formulation for Modeling Design and Optimization of Linear Hybrid Motor", *IEEE Trans. Magn.*, vol. 52, no. 3, March 2016.

Received 19 March 2016