HAL
open science

BAN antenna design using ferrite polymer composite

Thierry Alves, Robin Augustine, Marjorie Grzeskowiak, Benoît Poussot, David Delcroix, Stéphane Protat, Jean-Marc Laheurte, Patrick Queffelec

To cite this version:

Thierry Alves, Robin Augustine, Marjorie Grzeskowiak, Benoît Poussot, David Delcroix, et al.. BAN antenna design using ferrite polymer composite. 2009 3rd European Conference on Antennas and Propagation, Mar 2009, Berlin, Germany. pp.965-968. hal-02194038

HAL Id: hal-02194038

https://hal.science/hal-02194038v1

Submitted on 25 Jul 2019

HAL is a multi-disciplinary open access archive for the deposit and dissemination of scientific research documents, whether they are published or not. The documents may come from teaching and research institutions in France or abroad, or from public or private research centers.

L'archive ouverte pluridisciplinaire **HAL**, est destinée au dépôt et à la diffusion de documents scientifiques de niveau recherche, publiés ou non, émanant des établissements d'enseignement et de recherche français ou étrangers, des laboratoires publics ou privés.

Open Archive Toulouse Archive Ouverte (OATAO)

OATAO is an open access repository that collects the work of some Toulouse researchers and makes it freely available over the web where possible.

This is an author's version published in: https://oatao.univ-toulouse.fr/24096

To cite this version :

Alves, Thierry and Augustine, Robin and Grzeskowiak, Marjorie and Poussot, Benoît and Delcroix, David and Protat, Stéphane and Laheurte, Jean-Marc and Quéffélec, Patrick BAN antenna design using ferrite polymer composite. (2009) In: 2009 3rd European Conference on Antennas and Propagation, 23 March 2009 - 27 March 2009 (Berlin, Germany).

Any correspondence concerning this service should be sent to the repository administrator:

tech-oatao@listes-diff.inp-toulouse.fr

BAN Antenna Design Using Ferrite Polymer Composite

T. Alves[#], R. Augustine[#], M. Grzeskowiak[#], B. Poussot[#], D. Delcroix[#], S.Protat[#], J-M. Laheurte[#], P.Quéffélec[*]

[#]*Laboratoire ESYCOM, Université Paris-Est Marne-La-Vallée*

Batiment Copernic 5 Bd Descartes, Champs-sur-Marne 77454 Marne La Vallée Cédex 2, France

talves@univ-mlv.fr

[*]*LEST, UMR CNRS 6165, CS 93832*

Université de Bretagne Occidentale, Brest Cedex 393837-29238, France

Abstract: **Wearable antennas are an integral part of Body Area Networks (BAN). Antenna design for BAN applications is a challenging task since the antennas have to be small, efficient and must not be affected by the wearer's body. This makes isolation of antenna a matter of importance. Ferrites form an opaque media for microwave at the ISM frequencies and hence it could be used for the isolation of antenna from surroundings. Thin polymeric ferrite sheets are used to reduce body influence in BAN perspective.**

I. Introduction

Wearable computing has become a fast growing field in application oriented research. Wireless Body Area Networks (BAN) require body worn antennas, which at microwave frequencies can suffer from reduced efficiency, radiation pattern fragmentation and variations in feed point impedance. In this paper, stress is made to reduce the influence of human body on antenna characteristics [1, 2]. The antennas selected for the study are small and conformal. They are sensitive to both linear polarizations and have miniaturized ground plane to suit BAN applications at 2.4 GHz. These antennas could be easily integrated and printed on fabric to realize wearable structures. The aim of this paper is to compare different types of antennas in the BAN perspective. Ferrite polymer composites are added to the design as an aid to isolate antenna from the body influence. In BAN environments, one of the possible antenna locations is the arm and we focus our study on this part of the body.

II. Antenna design for BAN applications

Antennas for BAN applications should be as small and flat as possible. Antenna bandwidth is related to its dimension according to the following empirical equation [3]:

$$\Delta f_{S11(-10dB)} = \frac{\sqrt{2}}{9} f_0 (rk)^3 \qquad (1)$$

where Δf is the bandwidth defined for S11 at -10 dB, f_0 is the operating frequency, k is the wave number and r is the radius of the sphere involving the antenna. The bandwidth is proportional to the cube of the antenna dimensions. Reducing r by a factor of 2, decreases the bandwidth by a factor of 8. For a given operating frequency, the antenna's physical dimensions can be reduced by using proper designs.

When antennas are in the vicinity of the body, their behaviour is seriously affected. This drawback results from the high permittivity values of skin and muscle (near 50 at 2.4 GHz). For electrically small antennas, the matched bandwidth is narrow, usually few percents of the operating frequency. Therefore, the aerial is no longer matched when placed near body with a resonance frequency shifted downwards as shown in figure 1 (usually more than 20 %, depending on the antenna type). On the other hand, biological tissues losses yield a bandwidth increase which does not compensate for the resonance shift.

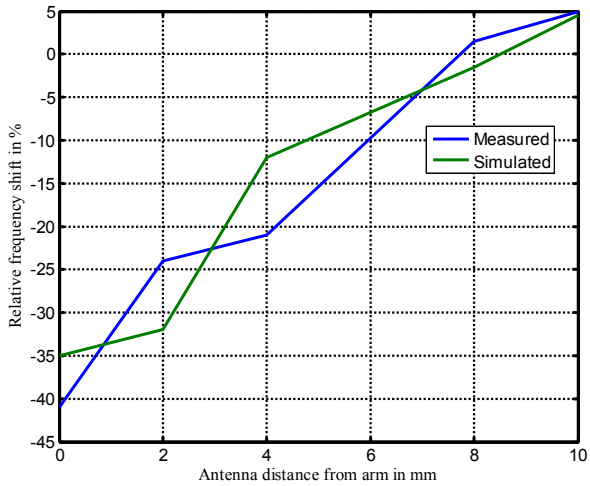

Fig. 1 Influence of Human Arm on IIFA's resonant frequency

In the design methodology, BAN antennas are first manufactured without taking into account the body influence. Then the body effects on antenna matching are studied. It must be noticed that the distance to the skin is not necessarily controlled in the BAN context, which motivates the study of the distance influence carried out through this work. New techniques are proposed to resolve the problem. The antennas are redesigned with the proposed solutions and from the results conclusions were drawn out.

III. Low Profile BAN Antennas

HFSS™ is used to design three different low profile antennas, i.e., PIFA (Planar Inverted-F Antenna), IIFA (Integrated Inverted-F Antenna) and CWPA (Coplanar Wire Patch Antenna) [5], all realized on FR4 substrate (ε_r= 4.4, tan δ= 0.02). Inverted-F radiating structures are chosen for, they are found to be more efficient than other conventional low profile antennas (Inverted-L, mini-whip etc).

A. IIFA

The IIFA is a small planar inverted-F antenna with coplanar feeding. In the literature, microstrip feeding has been predominantly used. Since our goal in a near future is to easily incorporate the antennas on clothes, the coplanar feeding is obviously the simplest and most advantageous feeding. Attempts to reduce the ground plane size have been done, and the antenna has a working bandwidth of 800 MHz. Maximum antenna gain is around 2 dBi.

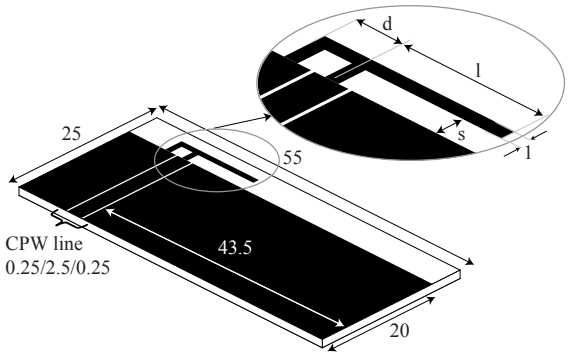

Fig. 2 IIFA dimensions (all dimensions in mm)

Following we give the dimensions of the antenna: 2 mm, 10.5 mm and 3.5 mm respectively for s, l, and d.

B. PIFA

The PIFA is an improved thin antenna with coplanar feeding to facilitate its use in BAN context. The antenna height is $\lambda/40$. The size of the ground plane has been reduced to the smallest possible dimensions. This causes the energy to radiate normally to the ground plane instead of along it, as for a monopole. This is a disadvantage as the link between two PIFA's on a body circuit will suffer from multiple scattering with no direct link. The antenna gain is around 1 dBi.

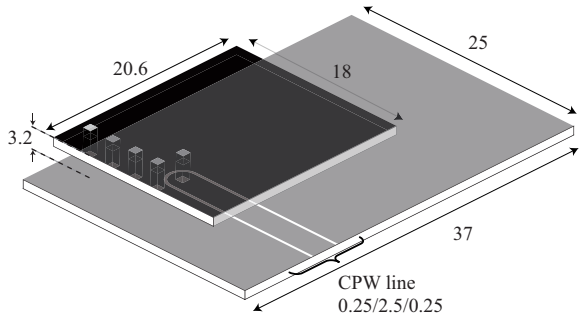

Fig. 3 PIFA dimensions (all dimensions in mm)

C. CWPA

This is a form of printed PIFA antenna comprised of a rectangular patch with a concentric ground plane. Low resonant frequency is achieved by introducing a shorting line between the patch and the concentric ground plane. The radiations behaviours are similar to monopole.

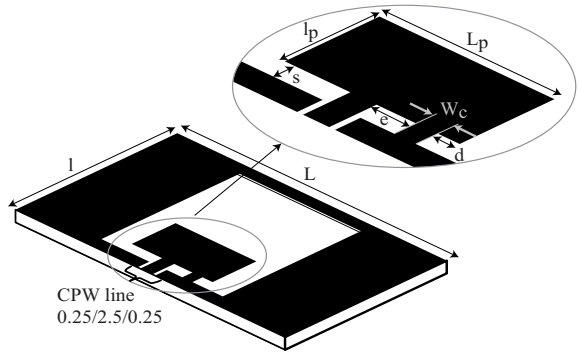

Fig. 4 CWPA dimensions (all dimensions in mm)

Following antenna's dimensions are given: 10.5 mm and 13 mm are respectively set for l_p and L_p. The patch dimensions are set to: 32 mm and 24 mm for L and l. The shorting line as a width W_c of 2 mm and patch spacing s is 0.7 mm. Finally, we set e and d to 1 and 2 mm.

IV. Body Influence and Antenna Performances

A. Phantom model

To consider the electrical properties of biologic tissues [6], a human arm phantom is modelled (fig.5) in HFSS™. The phantom is a planar multi-layered structure (Table I) representing the skin, fat, muscle, and cortical bones of the arm in a simple way. In order to take into account the near field effects, we have selected a lambda sized phantom. In the specific case at 2.4 GHz the dimensions are, 120mm x 120mm.

TABLE I

Electrical tissues properties

Tissue	Conductivity S/m	Relative Permittivity	Loss Tangent
Bone Cortical	0.39	11.4	0.25
Fat	0.11	5.3	0.14
Skin Dry	1.60	42.8	0.27
Muscle	1.74	52.7	0.24

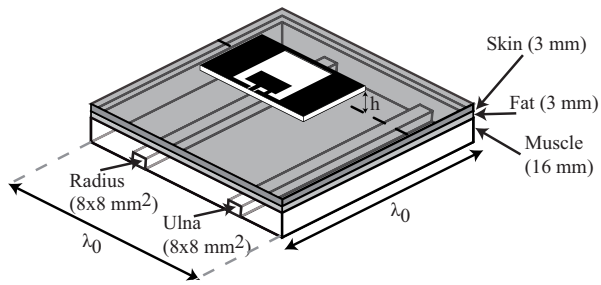

Fig. 5 Human arm phantom model

The HFSS phantom model shows closer evolution to that of human arm measurements as shown in Figure 1. Modelling embedded fluid (blood vessels) will further increase the accuracy of the model.

B. BAN Antenna efficiency

The efficiency of BAN antennas can be defined from the knowledge of the quality factor of both antenna and body tissues. The quality factor of the tissue is the inverse of tan δ, which is in the order of 4 for skin and muscles at 2.4 GHz. The quality factor is calculated from the matching bandwidth at -10 dB by the following relation:

$$Q_0 = \frac{\sqrt{2}}{2}\frac{f_0}{\Delta f_{S11(-10dB)}} \tag{2}$$

By referring to [4] an approximation of antenna efficiency close to body can be found:

$$\eta = \eta_{ant}\frac{1}{1+\frac{Q_0}{Q_{tissues}}} \tag{3}$$

Where η_{ant} is the antenna efficiency in free-space, Q_0 is the antenna quality factor and $Q_{tissues}$ is the tissues quality factor. This expression indicates that the BAN antenna quality factor should be as small as or even smaller than that of tissues to obtain a good efficiency. This implies that only UWB antennas will have acceptable efficiency for BAN applications. However this kind of antennas may be too big to be integrated on clothes (eqn. 1). So a compromise has to be made to obtain an acceptable efficiency.

C. Matching antenna properties

The antennas are designed in free space. To investigate body influence on antennas, a phantom is introduced and simulations are performed at different distances from it: 0, 2, 4, 8 and 16 mm. The gain, efficiency and return loss are then extracted and compared between the three different antennas (Table II). For each configuration, the resonant frequency is compared with the free space antenna resonant frequency. Measurements are carried out by placing the antennas on human arm. Figure 6 shows the measured effect on resonant frequency for PIFA and CWPA. From this graph, it can be seen that CWPA is more affected than PIFA; this is explained by the following fact. The near field of the PIFA is almost concentrated on the ground plane perpendicular to the radiating element explaining why the antenna is less affected by the lossy phantom. On the other hand, CWPA and IIFA have their radiating elements co-linear to the ground plane and facing the phantom. So their characteristics are strongly affected by human body. But because they are planar, these antennas are attractive for BAN applications.

The matching properties of IIFA operating at 2.4 GHz in free space are shown in figure 7. When the antenna approaches the body, the resonance frequency slightly moves to upper values, from 2.4 GHz to 2.6 GHz. The bandwidth also widens because of the RF losses inside the body. When the antenna gets closer to body the resonant frequency decrease resulting in a mismatch at 2.4 GHz (curve for h=3 mm).

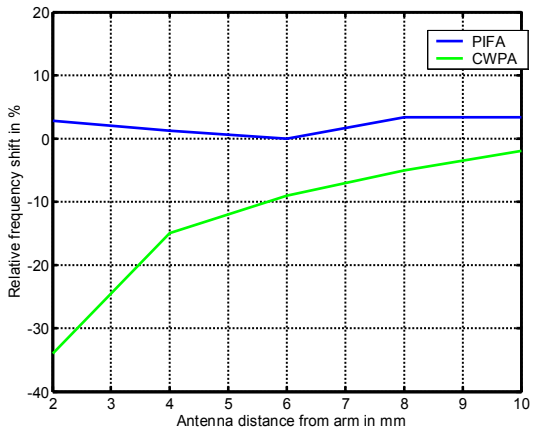

Fig. 6 Influence of Human Arm on PIFA's and CWPA's resonant frequency

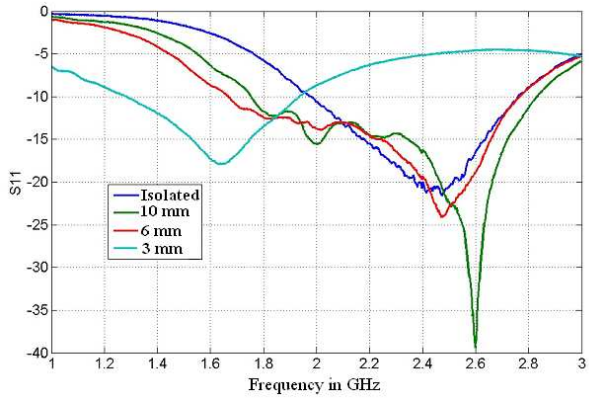

Fig. 7 IIFA MATCHING WITH ANTENNA HEIGHT OVER BODY.

D. Introduction of ferrite sheets

The presence of a backing ground plane is beneficial to mask the body and limits its influence on the antenna impedance. However, low profile and integration into fabrics are the ultimate goals for most BAN applications. Therefore, a backing ground plane associated with very thin dielectric substrates (<0.5mm) would result in inefficient antennas, especially for low frequencies.

Attempts to reduce the body influence are done by introducing polymeric ferrite sheet (PFS) of 0.5 mm thickness on the backside of the antenna. The PFS characteristics are measured by waveguide perturbation method at 2.4 GHz. We obtain 90, 7, 1 and 6.5 for ε'_r, ε''_r, μ'_r and μ''_r respectively. From these characteristics, the antennas are redesigned using HFSS™. This material adds losses to the antenna, lowering the efficiency and increasing the bandwidth of antenna in free space. Efficiency values observed in the presence of polymeric ferrite sheet are similar to those obtained in a close vicinity of human arm phantom model. However this technique leads to a significant reduction of the body influence (proximity and tissue absorption) on the resonant frequency by masking the body.

TABLE II

PERFORMANCE COMPARISON OF DIFFERENT ANTENNAS

Antenna (fr=2.4GHz)	h (mm)	Relative Resonant Frequency Shift (%)		BW_{-10dB} (MHz)		Gain (dB)	Efficiency (%)
		Measured	Simulated	Measured	Simulated	Simulated	Measured
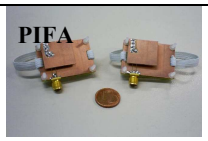 PIFA	Free Space	--	--	123	100	3.4	90
	At 4 mm without ferrite	1.1	1.2	187	190	0.6	--
IIFA	Free Space	--	--	821	820	3.2	95
	At 4 mm without ferrite	32	22.5	686	690	-1.2	--
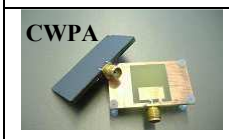 CWPA	Free Space	--	--	130	120	2.3	97
	At 4 mm without ferrite	17	5.3	950	110	-1.3	--

V. ANTENNA DESIGN WITH FERRITE POLYMER

While using PFS, the antennas should be redesigned so that it could work at 2.4 GHz. Following, we give the new dimensions for each antenna:

- IIFA: 4.5 mm and 3 mm respectively for l and d; s is kept to the same value.

- CWPA: 6.5 mm and 12 mm are respectively set for l_p and L_p. The patch dimensions are set to : 46 mm and 24 mm for L and l. The shorting line as a width W_c of 1.5 mm and patch spacing s is 1.5 mm. Finally, we set e and d to 3 and 1.5 mm.

- PIFA: since this antenna is not significantly affected by body redesign is not required, see figure 6.

CWPA measurements are shown in Figure 8. It is found that PFS acts as an efficient isolator as it reduces the influence of body on antenna resonant frequency to a greater extend. Efficiency measurements show that the antenna has almost the same efficiency when it is in contact with PFS as when it is in contact with body. No further efficiency loss is encountered, when it is sandwiched between antenna and body. This effect is mainly due to ferrite's high permittivity and losses. We are working towards developing printed antennas on PFS by selecting optimized ferrites (having lower permittivity and dielectric loss) [8]. We are successful in retaining the resonant frequency of our antennas at 2.4GHz which is one of the main requirements for on-body applications.

VI. CONCLUSIONS

Three different low profile, conformal antennas were designed to resonate at 2.4GHz. Measurements were carried out with human arm and phantom model to study the influence. Thin polymeric ferrite sheets introduced to reduce the interference allow a better isolation of antenna with human body in terms of resonant frequency. The work is further extended for the betterment of on-body efficiency of the antenna by using ferrite sheets having lower permittivity and losses.

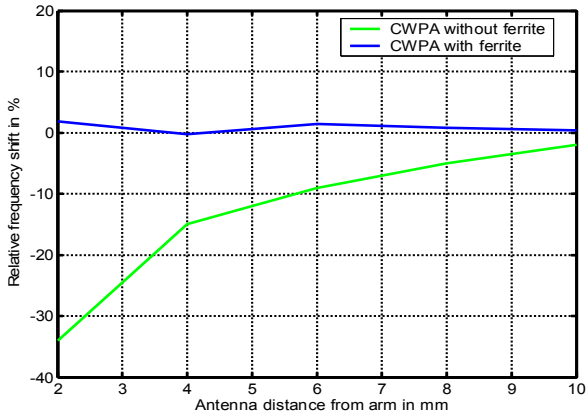

Fig. 8 Frequency shift improvement with ferrite polymer

REFERENCES

[1] S.I. Woolley, J.W. Cross, S. Ro, R. Foster, G. Reynolds, C. Baber, H. Bristow, and A. Schwitz, "Forms of wearable computer" IEE Eurowearable'03, UK,2003.

[2] L. Ivo, K. Maciej, K. Tunde and T. Gerhard, "Design and Characterisation of Purely Textile Patch antennas", IEEE Transactions on advanced packaging, Vol.29, No.4, November 2006

[3] H.A. Wheeler, « Small Antennas », IEEE Transactions on antennas and propagation, vol. AP-23, No. 4, July 1975.

[4] E.H Newman, P. Bohley, et C.H. Walter, « Two Methods for the Measurement of Antenna Efficiency », IEEE Transactions on antennas and propagation, vol. AP-23, No. 4, July 1975.

[5] F. Pasquet, B. Jecko, "New developments of the wire-patch antenna for ceramic technology and multifunction applications", Antennas and Propagation Society International Symposium, 2001, IEEE.

[6] S. Gabriel, R.W Lau and C. Gabriel, "The Dielectric Properties of Biological Tissues: II. Measurements in frequency range 10Hz to 20GHz", Phys.Med.Biol.,(1996) 41, p.2251-2269.

[7] The manufacturer is COPELMA, look at: http://www.compelma.com/actualites.html.The ferrite sheet used has the fallowing reference: WDHTV1-0.002.

[8] Kitra, M.I. Panagamuwa, C.J. McEvoy, Vardaxoglou, J.C. James, J.R. , 'Low SAR Ferrite Handset Antenna Design', IEEE Transactions on antennas and propagation, Vol.56, Issue, 11, April 2007.