HAL open science

Quasi-Complementary Foliations and the Mather-Thurston Theorem

Gaël Meigniez

▶ To cite this version:

Gaël Meigniez. Quasi-Complementary Foliations and the Mather-Thurston Theorem. 2019. hal-02150832v1

HAL Id: hal-02150832

https://hal.science/hal-02150832v1

Preprint submitted on 7 Jun 2019 (v1), last revised 9 Sep 2021 (v2)

HAL is a multi-disciplinary open access archive for the deposit and dissemination of scientific research documents, whether they are published or not. The documents may come from teaching and research institutions in France or abroad, or from public or private research centers.

L'archive ouverte pluridisciplinaire **HAL**, est destinée au dépôt et à la diffusion de documents scientifiques de niveau recherche, publiés ou non, émanant des établissements d'enseignement et de recherche français ou étrangers, des laboratoires publics ou privés.

QUASI-COMPLEMENTARY FOLIATIONS AND THE MATHER-THURSTON THEOREM

Abstract. We establish a form of the h-principle for the existence of foliations quasi-complementary to a given one; the same methods are also used to prove the classical Mather-Thurston theorem.

Gaël Meigniez

1. introduction

1.1. **Quasi-complementary foliations.** Given, on a manifold M, a dimension-q foliation $\mathscr{F}$, the existence of a foliation $\mathscr{G}$ complementary to $\mathscr{F}$ (that is, $\mathscr{G}$ is of codimension q and transverse to $\mathscr{F}$) is of course in general an intractable problem. In this paper, we weaken the transversality condition, prescribing a simple (and classical) model for the tangentialities between $\mathscr{F}$ and $\mathscr{G}$ which implies that $\mathscr{G}$ is a limit of plane fields complementary to $\mathscr{F}$ but themselves not necessarily integrable. We establish, when $q \geq 2$, a form of Gromov's h-principle for such "quasi-complementary" foliations.

Here is a very elementary example similar to what we call quasi-complementarity, although $q = 1$. Consider the Hopf foliation $\mathscr{F}$ of the 3-sphere $\mathbf{S}^3$ by circles. The classical geometric theory of foliations shows that $\mathscr{F}$ admits no complementary foliation $\mathscr{G}$: indeed, by the Novikov closed leaf theorem (see for example [2] or [3]), $\mathscr{G}$ would have a compact leaf which would separate $\mathbf{S}^3$, in contradiction to the transversality to $\mathscr{F}$; alternatively, one can argue that the Hopf fibration would then be a foliated bundle ([2] pp. 99-100, or [3] example 2.1.5) over a simply-connected base $\mathbf{S}^2$; hence all leaves of $\mathscr{G}$ would be diffeomorphic to the base; and by the Reeb global stability theorem ([2] ch. IV theorem 4, or [3] theorem 6.1.5), the total space would be $\mathbf{S}^2 \times \mathbf{S}^1$, not $\mathbf{S}^3$.

However, it is easily verified that the sphere has a Reeb foliation $\mathscr{G}$ which is complementary to the circles but on its unique compact leaf, which is tangential to them. Moreover, $\mathscr{G}$ is a limit of 2-plane fields complementary to the circles, provided that one makes its two Reeb components "turbulize" in appropriate directions: precisely, the holonomy of $\mathscr{G}$ along any circle fibre in the compact leaf must be contracting on one side of the leaf, and expanding on the other.

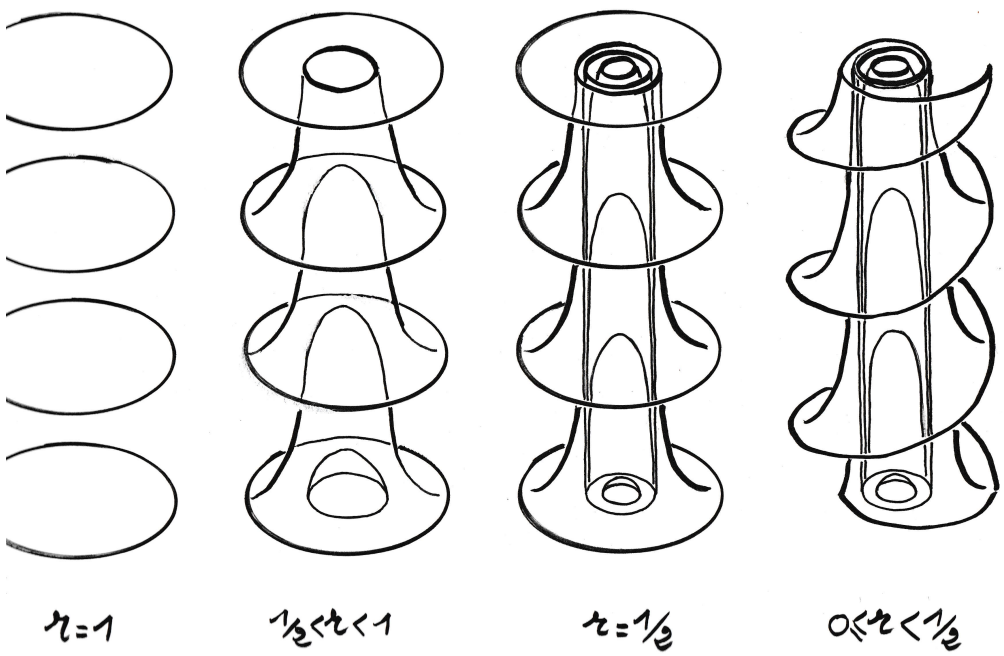

FIGURE 1. Thurston's movie

The models for the tangentialities are classical, being nothing but W. Thurston's constructions to fill holes in codimensions 2 and more ([26], paragraph 4). To fix ideas, the smooth (C^∞) differentiability class is understood everywhere, unless otherwise specified. On the interval $\mathbf{I} := [0,1]$, fix a smooth real function $r \mapsto u(r)$ such that $u'(r) > 0$ for $0 < r < 1$, and u is flat on 0 at 0 (in the sense that $u(r)$ and all its derivates vanish at $r = 0$), and $u(r) + u(1-r) = 1$. Write $\mathbf{D}^n$ (resp. $\mathbf{S}^{n-1}$) for the compact unit ball (resp. sphere) in $\mathbf{R}^n$; endow $\mathbf{D}^2$ with the polar coordinates ρ, θ; endow $\mathbf{S}^1$ with the coordinate s; on $\mathbf{D}^2 \times \mathbf{S}^1$, one has the smooth 1-parameter family $(\omega_r)_{r\in\mathbf{I}}$ of smooth nonsingular integrable 1-forms defined for $0 \le r \le 1/2$ by

$$\omega_r := u(1-2\rho)ds + u(2\rho)d\rho$$

(on $\{\rho \le 1/2\}$) and

$$\omega_r := u(2-2\rho)d\rho + u(2\rho-1)(ds - u(1-2r)d\theta)$$

(on $\{\rho \ge 1/2\}$); while for $1/2 \le r \le 1$:

$$\omega_r := u(2-2r)\omega_{1/2} + u(2r-1)ds$$

(Figure 1). Fix $p, q \ge 2$. For every closed $(p-2)$-fold Σ, we define the

multifold Reeb component of core Σ as the $(p+q)$-fold

$$C_\Sigma := \Sigma \times \mathbf{D}^2 \times \mathbf{D}^{q-1} \times \mathbf{S}^1$$

(whose projection to the i-th factor, $1 \leq i \leq 4$, will be denoted by pr_i) endowed with two foliations:

- The dimension-q foliation $\mathscr{F}_\Sigma$ parallel to the factor $\mathbf{D}^{q-1} \times \mathbf{S}^1$;
- The codimension-q foliation $\mathscr{G}_\Sigma$ obtained by endowing, for every $a \in \mathbf{D}^{q-1}$, the fibre ${\mathrm{pr}_3}^{-1}(a)$ with its codimension-1 foliation pullback of the 1-form $\omega_{|a|}$ under $\mathrm{pr}_2 \times \mathrm{pr}_4$.

DEFINITION 1.1. On a $(p+q)$-fold M, the codimension-q foliation $\mathscr{G}$ is *quasi-complementary* to the dimension-q foliation $\mathscr{F}$ if they are transverse but maybe for finitely many disjoint multifold Reeb components $C_\Sigma \hookrightarrow M$, in which $\mathscr{F}$ (resp. $\mathscr{G}$) coincides with $\mathscr{F}_\Sigma$ (resp. $\mathscr{G}_\Sigma$).

The components may have different cores; one can of course also consider the union of the components as one component whose core may be not connected. Note that $\mathscr{G}$ is complementary to $\mathscr{F}$ on M but on the subset defined in each component C_Σ by $\rho \circ \mathrm{pr}_2 = 1/2$ and $\|\mathrm{pr}_3\| \leq 1/2$, which is a hypersurface tangential to $\mathscr{F}$. Also, it is easily verified that $\mathscr{G}$ is a limit of codimension-q plane fields complementary to $\mathscr{F}$ on M.

The elements on Haefliger structures, their regularity, their differential, their concordances and their relations to foliations will be recalled on Section 2 below. Recall the Foliation theorem in codimensions 2 and more, also known as "h-principle for foliations", on closed manifolds ([26], see also [4] and [23]). We use the notation $\mathscr{O}p_X(Y)$ for "some open neighborhood of Y in X".

THEOREM 1.2 (Thurston). *On a compact manifold M, let ν be a real vector bundle of dimension $q \geq 2$, let γ be a Γ_q-structure whose normal bundle is ν, and let ω be a 1-form valued in ν of constant rank q; assume that $d\gamma = \omega$ on $\mathscr{O}p_M(\partial M)$.*

Then, M admits a regular *Γ_q-structure γ' of normal bundle ν such that:*

- *$\gamma' = \gamma$ on $\mathscr{O}p_M(\partial M)$, and γ' is concordant to γ on M (rel. ∂M);*
- *$d\gamma'$ is homotopic to ω on M (rel. ∂M) among the 1-forms valued in ν of constant rank q.*

Our main result is a refinement of this classical one for a manifold already foliated.

THEOREM A. *On a compact manifold M, let $\mathscr{F}$ be a foliation of dimension $q \geq 2$, let γ be a Γ_q-structure whose normal bundle is $\tau\mathscr{F}$,*

and let ω be a 1-form valued in $\tau\mathscr{F}$ such that $\omega|\tau\mathscr{F}$ is of constant rank q; assume that $d\gamma = \omega$ on $\mathscr{O}p_M(\partial M)$.

Then, M admits a regular Γ_q*-structure γ' of normal bundle $\tau\mathscr{F}$ such that:*

(1) $\gamma' = \gamma$ on $\mathscr{O}p_M(\partial M)$, and γ' is concordant to γ on M (rel. ∂M);
(2) $d\gamma'$ is homotopic to ω on M (rel. ∂M) among the 1-forms valued in $\tau\mathscr{F}$ of constant rank q;
(3) The foliation induced by γ' is quasi-complementary to $\mathscr{F}$ on M.

NOTE 1.3. We put no restriction on the position of $\mathscr{F}$ with respect to ∂M.

NOTE 1.4. Theorem A holds in every differentiability class C^r, $1 \leq r \leq \infty$, with the same proof. A parametric form also holds.

NOTE 1.5. By construction, for $p := \operatorname{codim}(\mathscr{F}) \geq 2$, the core Σ of each multifold Reeb component will be a bisphere $\mathbf{S}^{i-1} \times \mathbf{S}^{p-i-1}$, with $1 \leq i \leq p-1$. One can if one likes better, by a trick due to Thurston, arrange that Σ is the $(p-2)$-torus [28]; or, for $p \geq 3$, that $\Sigma = \mathbf{S}^1 \times \mathbf{S}^{p-3}$ [21].

NOTE 1.6. This result and our proof also hold for $p = 1$, in which case there exist no multifold Reeb components at all, hence "quasi-complementary" means "complementary". Of course, it is not a great deal to produce a foliation complementary to a given codimension-1 foliation; however, the point is that there is one *in every concordance class* of Γ_q-structures whose normal bundle is $\tau\mathscr{F}$; and this holds in every differentiability class, including C^{q+1}.

Denote, as usual, by $B\Gamma_q^r$ (resp. $B\bar{\Gamma}_q^r$) the Haefliger classifying space for the Γ-structures (resp. parallelized Γ-structures) of codimension q and differentiability class C^r. One has in particular the following corollaries of Theorem A, since $B\bar{\Gamma}_q^1$ is contractible [29] and since $B\bar{\Gamma}_q^\infty$ is $(q+1)$-connected [27].

COROLLARY 1.7. *Let $\mathscr{F}$ be a C^∞ foliation of dimension at least 2 on a closed manifold.*

Then, $\mathscr{F}$ admits a quasi-complementary foliation of class C^1. If moreover the codimension of $\mathscr{F}$ is 2, or if the bundle tangent to $\mathscr{F}$ is trivializable, then $\mathscr{F}$ admits a quasi-complementary foliation of class C^∞.

About the proof — Theorem A is better established under a version A' producing a foliation $\mathscr{G}$ with holes (see Section 3) instead of multifold Reeb components; the holes have a product structure $\mathbf{D}^2 \times \Sigma \times \mathbf{D}^q$;

in that frame, quasi-complementarity means that outside the holes, $\mathscr{G}$ is complementary to $\mathscr{F}$, and that inside the holes, the slices parallel to $\mathbf{D}^q$ are plaques of $\mathscr{F}$. For $q \geq 2$, the versions A and A' are straightforwardly equivalent to each other through Thurston's method to fill the holes; but A' also holds in codimension $q = 1$.

To prove A', the problem is translated, using the Gromov-Phillips-Haefliger parametric Foliation theorem on open manifolds, into an extension problem whose proof falls to an adaptation of the original "inflation" process that Thurston introduced to prove Theorem 1.2. We feel that the present work illustrates the power and the accuracy, in the frame of Gromov's h-principle, of the tools that Thurston left to us after his early works on foliations.

1.2. **A proof of the Mather-Thurston theorem.** A second application of our method deals with the construction of foliated products. In the case where the given foliation $\mathscr{F}$ is a product foliation, we shall get full complementarity at the price of modifying the base factor of the product by some surgeries; in other words we give a proof of the classical Mather-Thurston theorem [27], by means of a geometric construction pertaining to the h-principle.

See [15] for J. Mather's proof in codimension 1; see [17], pp. 79–80, for a mention of Thurston's three proofs, of which the first seems to be lost; see [16][17][18][19][25] for the two other proofs.

Precisely, fix a manifold X (compact or noncompact, and, to fix ideas, without boundary) of dimension $q \geq 1$. For a compact oriented p-fold V maybe with smooth boundary ($p \geq 0$), say that a codimension-q foliation, or a Γ_q-structure, on $V \times X$, is *horizontal at infinity* if it coincides with the slice foliation parallel to V, but maybe on some compact subset. Recall that a *foliated X-product* over V means a codimension-q foliation on $V \times X$ complementary to the fibres $v \times X$ and horizontal at infinity. We use the notation $\hat{V} \subset V \times \mathbf{I}$ for the union of $V \times 0$ with $\partial V \times \mathbf{I}$. An *oriented cobordism* (V, W, V') *rel.* ∂V means as usual a compact oriented p-fold V' such that $\partial V' \cong \partial V$ and a compact oriented $(p+1)$-fold W bounded by $-\hat{V} \cup_{\partial V} V'$. We write pr_2 for the projections $V \times X \to X$ and $W \times X \to X$; we write $\mathrm{pr}_1 \times \mathrm{pr}_3$ for the projection $V \times \mathbf{I} \times X \to V \times X$.

We shall prove:

THEOREM 1.8 (Mather-Thurston, version "for geometrically minded topologists"). *Let V be a compact oriented p-fold; let γ be a Γ_q-structure on $V \times X$, of normal bundle $\mathrm{pr}_2^*(\tau X)$, horizontal at infinity, and inducing a foliated X-product over ∂V.*

Then, there are an oriented cobordism (V, W, V') *rel.* ∂V *and a* Γ_q*-structure on* $W \times X$*, of normal bundle* $\mathrm{pr}_2^*(\tau X)$*, horizontal at infinity, coinciding with* $(\mathrm{pr}_1 \times \mathrm{pr}_3)^*(\gamma)$ *on* $\hat{V} \times X$*, and inducing a foliated* X*-product over* V'*.*

In order to get the classical version of the theorem, realize $B\Gamma_q$ as a fibred space over BO_q with fibre $B\bar{\Gamma}_q$, and consider:

• The group $\mathrm{Diff}_c(X)$ of the compactly supported diffeomorphisms of X, endowed with the smooth topology; the same group $\mathrm{Diff}_c(X)_\delta$ with the discrete topology; the homotopy-theoretic fibre $\overline{\mathrm{Diff}_c(X)}$ of the identity map $\mathrm{Diff}_c(X)_\delta \to \mathrm{Diff}_c(X)$; and the classifying space $B\overline{\mathrm{Diff}_c(X)}$; recall that $B\overline{\mathrm{Diff}_c(X)}$ classifies the foliated X-products;

• The space $\Gamma_c(\tau X)$ of the maps

$$f : X \to B\Gamma_q$$

such that f lifts the map $X \to BO_q$ that classifies τX, and such that f classifies $\mathscr{X}$ at infinity (in particular, for $X = \mathbf{R}^q$, the space $\Gamma_c(\tau \mathbf{R}^q)$ coincides with the q-th loop space $\Omega^q(B\bar{\Gamma}_q)$);

• The map

$$B\overline{\mathrm{Diff}_c(X)} \xrightarrow{\alpha} \Gamma_c(\tau X)$$

adjoint to the map

$$X \times B\overline{\mathrm{Diff}_c(X)} \to B\Gamma_q$$

that classifies the Γ_q-structure of the total space of the universal foliated X-product [15][27].

Theorem 1.8 amounts to say that α induces an isomorphism in oriented bordism. Equivalently, by the "Hurewicz theorem for bordism groups" ([1], see also [6], appendix B), α induces an isomorphism in integral homology. That last wording is the classical one.

Jenseits des Homotopieprinzips — One could maybe speak of a "c-principle", with a "c" for "cobordism". Recall that when Gromov's famous *h-principle* holds for a problem, then every "formal solution" is *homotopic* to a genuine solution through the formal solutions. In the same way, let us say that the *c-principle* holds when every formal solution is *cobordant* to a genuine solution through the formal solutions. For example, the three following existence results pertain to the c-principle: the Mather-Thurston theorem for foliated products, the Madsen-Weiss theorem for fibrations whose fibres are surfaces (see [6]), and the realization of taut compactly generated pseudogroups by foliations of dimension 2 and codimension 1 [20]. See [8] for an early introduction to this subject, for an interpretation of the Mather-Thurston theorem close to ours, and for more examples.

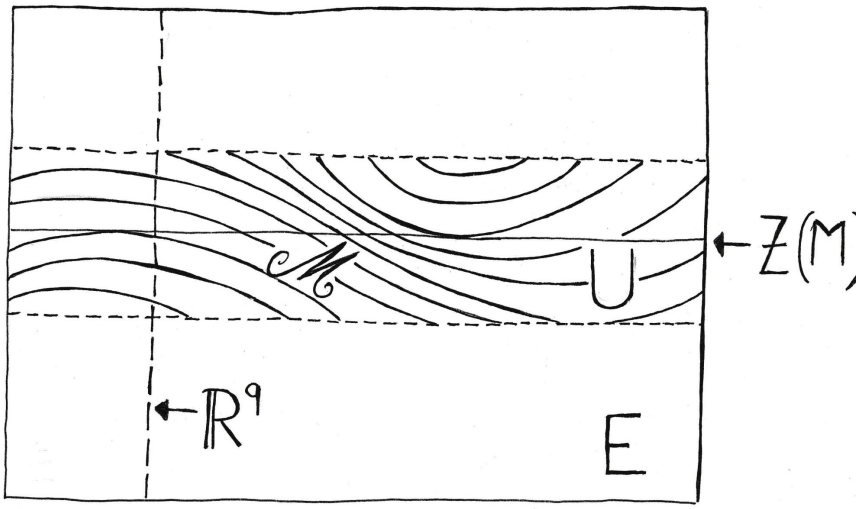

FIGURE 2. A Γ_q-structure.

The author thanks the referee for many relevant questions, critics and suggestions which have been of great help in improving the text.

2. Haefliger structures

In this section, we recall A. Haefliger's notion of Γ_q-*structure* [10][11][12][13], under the form of microfoliated bundle (this form was introduced in [11]; see also [22]). We fix some vocabulary, point out a few elementary facts, and prove the two parametric forms of the Foliation theorem on open manifolds.

We denote every real vector bundle ν over a manifold M as $\nu = (E, \pi, Z)$ where E is the total space, $\pi : E \to M$ is the projection, and $Z : M \to E$ is the zero section.

2.0.1. *Definition.* A Γ_q-structure γ on M is given by

- A real vector bundle $\nu = (E, \pi, Z)$ of dimension q over M;
- An open neighborhood U of $Z(M)$ in E;
- On U, a codimension-q foliation $\mathscr{M}$ transverse to every fibre.

One calls ν the *normal bundle,* and $\mathscr{M}$ the *microfoliation* (Figure 2). One regards two Γ_q-structures as equal if they have the same normal

bundle and if their microfoliations coincide on some open neighborhood of the zero section; in other words, γ is the germ of $\mathscr{M}$ along $Z(M)$; we shall also denote γ by $[\nu, U, \mathscr{M}]$.

A $\bar{\Gamma}_q$-*structure* means a Γ_q-structure whose normal bundle is $M \times \mathbf{R}^q$.

2.0.2. *Canonical form and differential.* Consider a Γ_q-structure $\gamma = [\nu, U, \mathscr{M}]$ on a manifold M, where $\nu = (E, \pi, Z)$.

On the manifold U, let Ω be the differential 1-form valued in $\pi^*(\nu)$, defined at every point $v \in U$ as the projection of $\tau_v E$ onto $\ker(d_v\pi) = \nu_{\pi(v)}$ parallelly to $\tau_v \mathscr{M}$. If one likes better, Ω is the unique 1-form defining the foliation $\mathscr{M}$ (in the sense that $\tau\mathscr{M} = \ker \Omega$) and whose restriction to every fibre of π is the identity. We call Ω the *canonical* form of the Γ_q-structure γ.

Let us define the *differential* $d\gamma$ of the Γ_q-structure γ as $Z^*(\Omega)$: a differential 1-form on M valued in ν.

NOTE 2.1. The notion of the differential of a Haefliger structure does not seem to appear in the literature. In the case where $d\gamma$ is of rank q, of course $d\gamma$ admits a convex set of left inverse vector bundle monomorphisms $\nu \hookrightarrow \tau M$, which are the objects that the authors have considered instead. The differential exists for every Haefliger structure at every point, not only at the regular ones. It is functorial with respect to pullbacks (see further down). We feel that speaking in terms of $d\gamma$, the analogy between the h-principle for foliations and several other *avatars* of Gromov's h-principle becomes more transparent. From our viewpoint, the Foliation theorem homotopes a given differential form of maximal rank to an integrable one.

2.0.3. *Pullback.* Given a Γ_q-structure $\gamma = [\nu, U, \mathscr{M}]$ on M, and given a smooth mapping $f : N \to M$, one defines a pullback Γ_q-structure $f^*(\gamma)$ on N whose normal bundle is the usual pullback bundle $f^*(\nu)$, and whose microfoliation is the preimage of $\mathscr{M}$ under the canonical bundle morphism $f^*(\nu) \to \nu$.

2.0.4. *Isomorphisms.* Milnor's notion of *microbundle* (here smooth) is the natural one for the bundle normal to a Haefliger structure. For simplicity, one rather speaks in terms of vector bundle; but this underlying fact is reflected in the morphisms that one admits. It is enough to define isomorphisms.

Let $\gamma = [E, \pi, Z, U, \mathscr{M}]$ and $\gamma' = [E', \pi', Z', U', \mathscr{M}']$ be two Γ_q-structures on M. We define an *isomorphism* between γ and γ' as a germ of diffeomorphism $\varphi : U \to U'$ along $Z(M)$ such that $Z' = \varphi \circ Z$ and $\pi = \pi' \circ \varphi$ and $\mathscr{M} = \varphi^*(\mathscr{M}')$. Note that φ is not necessarily linear in the fibres, and that φ covers the identity of M.

If moreover the normal bundles (E, π, Z) and (E', π', Z') are equal and if the differential of φ at every point of $Z(M)$ is the identity, we call φ a *special isomorphism* between γ and γ'.

2.0.5. *Concordance.* A *concordance,* also known as a *homotopy,* between two Γ_q-structures γ_0, γ_1 on M which have the same normal bundle ν, is a Γ_q-structure γ on $M \times \mathbf{I}$ whose normal bundle is $\mathrm{pr}_1^*(\nu)$ and such that $\gamma|(M \times i) = \gamma_i$, for $i = 0, 1$.

For example, any two specially isomorphic Γ_q-structures are concordant.

The *concordance extension property,* which is obvious from Haefliger's original viewpoint on the Γ-structures [10] and almost as obvious from the geometric viewpoint adopted here, will be often used without mentioning it: given a Γ_q-structure γ on M and a submanifold $N \subset M$, every concordance of $\gamma|N$ extends to a concordance of γ.

2.0.6. *Regular Haefliger structures and foliations.* A Γ_q-structure $\gamma = [E, \pi, Z, U, \mathscr{M}]$ on M is called *regular* at a point x if $d\gamma$ is of maximal rank q at x; in other words, Z is transverse to $\mathscr{M}$ at x. If γ is regular on M, then it induces a codimension-q foliation $Z^*(\mathscr{M})$ on M.

Conversely, given a codimension-q foliation $\mathscr{G}$ on M, and choosing a Riemannian metric on M, there corresponds the regular Γ_q-structure $\gamma_{\mathscr{G}}$ whose normal bundle is $\tau M/\tau\mathscr{G}$ and whose microfoliation is $\exp^*(\mathscr{G})$, where exp is the exponential map $\tau M \to M$ restricted to the subbundle $\tau\mathscr{G}^\perp \cong \tau M/\tau\mathscr{G}$. Note that $d\gamma_{\mathscr{G}}$ is the canonical projection $\tau M \to \tau M/\tau\mathscr{G}$.

It is easily verified that any two *regular* Γ_q-structures on M with the same normal bundle and the same differential are specially isomorphic. One thus gets a one-to-one correspondence between the isomorphism classes of regular Γ_q-structures on M, and the codimension-q foliations on M. One can speak of the concordance class of a foliation $\mathscr{G}$ and of the differential $d\mathscr{G}$.

Also, the following *self-induction* property is useful: given a Γ_q-structure $\gamma = [E, \pi, Z, U, \mathscr{M}]$ on M, consider on U the Γ_q-structure $\gamma_{\mathscr{M}}$ corresponding to the foliation $\mathscr{M}$. Then, on M, the pullback $Z^*(\gamma_{\mathscr{M}})$ is specially isomorphic with γ.

2.0.7. *The parametric Foliation theorem on open manifolds.* The classical Foliation theorem on open manifolds admits two parametric versions, that we respectively call "nonintegrable" and "integrable". The second will be used repeatedly in the proof of Theorem *A'* below. It does not seem to appear explicitly in the literature, although all proofs

of the nonintegrable version (for example the one in [14]) actually prove the integrable one as well.

The space of parameters will be a compact manifold A; fix a compact submanifold $B \subset A$, maybe empty. Consider, over a manifold M, a real vector bundle $\nu = (E, \pi, Z)$; and its pullback $\tilde{\nu}$ over $M \times A$.

DEFINITION 2.2. By a *family* of Haefliger structures $(\gamma(a))_{a\in A}$ whose normal bundle is ν, one means, for every $a \in A$, a Γ_q-structure γ_a on M whose normal bundle is ν; denote its microfoliation by $\mathscr{M}(a)$; such that the (germ of) plane field $\tau\mathscr{M}(a)$ on $\mathscr{O}p_E(Z(M))$ depends smoothly on a.

Call the family $(\gamma(a))_{a\in A}$ *integrable* (with respect to the parameter) if moreover, there is a global Γ_q-structure $\tilde{\gamma}$ on $M \times A$ whose normal bundle is $\tilde{\nu}$ and whose restriction to the slice $M \times a$ is $\gamma(a)$, for every $a \in A$.

Fix a compact submanifold $N \subset M$ (maybe empty) such that the pair (M, N) is open, in the usual sense that every connected component of the complement $M \setminus N$ which is relatively compact in M meets ∂M. Assume that M carries a parametric family $(\omega(a))_{a\in A}$ of ν-valued differential 1-forms of constant rank q such that $d\gamma(a) = \omega(a)$ holds on $\mathscr{O}p_M(N)$ for every $a \in A$, and on M for every $a \in \mathscr{O}p_A(B)$. Consider the projection $\mathrm{pr}_1 : (x, t) \mapsto x$ and the embedding $\iota_t : x \mapsto (x, t)$ ($x \in M$, $t \in \mathbf{I}$).

THEOREM 2.3. *Consider a family $(\gamma(a))_{a\in A}$ of Γ_q-structures on M. Under the above hypotheses:*

(i) There is a smooth family $(\bar{\gamma}(a))_{a\in A}$ of Γ_q-structures on $M \times \mathbf{I}$ such that for every $a \in A$:

(1) $\iota_0^*(\bar{\gamma}(a)) = \gamma(a)$;
(2) $\bar{\gamma}(a) = \mathrm{pr}_1^*(\gamma(a))$ on $\mathscr{O}p_M(N) \times \mathbf{I}$;
(3) If $a \in B$, then $\bar{\gamma}(a) = \mathrm{pr}_1^*(\gamma(a))$ on $M \times \mathbf{I}$;
(4) $\gamma'(a) := \iota_1^*(\bar{\gamma}(a))$ is regular.

(ii) Moreover, the family $(d\gamma'(a))_{a\in A}$ is homotopic on M, relatively to $(N \times A) \cup (M \times B)$, to the family $(\omega(a))_{a\in A}$ among the families of ν-valued, rank-q 1-forms.

(iii) If the family $(\gamma(a))_{a\in A}$ is moreover integrable, then one can choose the family $(\bar{\gamma}(a))_{a\in A}$ to be also integrable.

Proof of Theorem 2.3. Haefliger's original proof of the nonparametric Foliation theorem on open manifolds [11][12] is a direct application of the Gromov-Phillips transversality theorem in the frame of Γ-structures: the transversality theorem is applied, in the total space of the normal

bundle of the structure, to the zero section, and provides a homotopy that puts it transverse to the microfoliation. This argument goes with parameters and thus proves both parametric versions, the non-integrable and the integrable. Here are the details, for the sake of completeness.

Choose a smooth plateau function χ on $M \times A$ such that

- $\chi = 1$ on a neighborhood of $P := (N \times A) \cup (M \times B)$;
- $\omega(a)_x = d\gamma(a)_x$ for every $(x, a) \in \mathrm{spt}(\chi)$.

Let $V \subset E$ be an open neighborhood of the zero section $Z(M)$, so small that $\mathscr{M}(\gamma(a))$ is defined on V for every parameter a, and that the plane field $\tau\mathscr{M}(a)$ on V depends smoothly on a. Let $\Omega(a)$ be on V the canonical, $\pi^*(\nu)$-valued 1-form defining $\mathscr{M}(a)$ (recall Paragraph 2.0.2 above).

For $a \in A$ fixed, consider over Z the bundle morphism

$$\zeta(a) : \tau M \to \tau E$$

defined for every $x \in M$ and $u \in \tau_x M$ as

$$\zeta(a)_x u := \chi(x, a)u \oplus (1 - \chi(x, a))\omega(a)_x u$$

(where the tangent space $\tau_{Z(x)}E$ is decomposed as $\tau_x M \oplus \nu_x$). Clearly,

$$\Omega(a)_{Z(x)} \circ \zeta(a)_x = \omega(a)_x \tag{1}$$

Hence, $\zeta(a)_x$ is transverse to $\tau_{Z(x)}\mathscr{M}(a)$ in $\tau_{Z(x)}E$. By the Gromov-Phillips transversality theorem [9][24] (which, if one likes, one can today obtain as an immediate application of the Eliashberg-Mishachev Holonomic Approximation theorem [5]), one has a map

$$H : M \times A \times \mathbf{I} \to V$$

and, over H, a homotopy of parametric families of bundles morphisms

$$\eta : \tau M \times A \times \mathbf{I} \to \tau E$$

such that for every $x \in M$, $u \in \tau_x M$, $a \in A$, $t \in \mathbf{I}$:

- $H(x, a, t) = Z(x)$ if $(x, a) \in P$ or $t = 0$;
- $\eta(u, a, t) = \zeta(a)_x u$ if $(x, a) \in P$ or $t = 0$;
- The map $u \mapsto \eta(u, a, t)$ maps linearly $\tau_x M$ into $\tau_{H(x,a,t)}E$ transversely to $\tau_{H(x,a,t)}\mathscr{M}(a)$;
- $\eta(u, a, 1) = (\partial H/\partial x)(x, a, 1)u$.

For every parameter a, define the Γ_q-structure $\bar{\gamma}(a)$ on $M \times \mathbf{I}$ as the preimage of $\mathscr{M}(a)$ through the map $(x, t) \mapsto H(x, a, t)$. The property (1) of Theorem 2.3 follows from the self-induction property of Paragraph 2.0.6; while (2), (3) and (4) are obvious.

(ii): Consider on M the 1-parameter family of A-parametrized families of rank-q, ν-valued 1-forms:

$$\varpi(a,t)_x u := \Omega_{H(x,a,t)}\eta(u,a,t)$$

(where $a \in A$, $t \in \mathbf{I}$, $x \in M$, $u \in \tau_x M$.) By Equation (1), $\omega(a) = \varpi(a,0)$. On the other hand, $\varpi(a,1) = d\gamma'(a)$.

(iii): Assume moreover that every $\gamma(a)$ is the restriction to the slice $M \times a$ of a global Γ_q-structure $\tilde{\gamma}$ on $M \times A$. Then, every $\bar{\gamma}(a)$ is the restriction to the slice $M \times a \times \mathbf{I}$ of the global Γ_q-structure on $M \times A \times \mathbf{I}$ that is the pullback of the microfoliation of $\tilde{\gamma}$ through the map

$$H \times \mathrm{pr}_2 : M \times A \times \mathbf{I} \to V \times A$$

□

3. Holes

We shall actually prove a form *A'* of Theorem *A* dealing with holes instead of multifold Reeb components; this form holds as well for $q = 1$. The holes are the classical ones, ubiquitous in the theory of foliations since Thurston's works [26][28].

For a compact q-manifold Q with smooth boundary (we are essentially interested in the case $Q = \mathbf{D}^q$), we denote by $\mathrm{Diff}(Q)$ the group of the diffeomorphisms of Q *whose support is contained in the interior of* Q*;* by $\mathrm{Diff}(Q)_0$ its identity component; by $\widetilde{\mathrm{Diff}}(Q)_0$ the universal cover. Fix an element $\varphi \in \widetilde{\mathrm{Diff}}(Q)_0$; recall that φ can be interpreted as the homotopy class, relatively to $\partial\mathbf{I}$, of a path of diffeomorphisms $(\varphi_t)_{t\in\mathbf{I}}$ such that $\varphi_t \in \mathrm{Diff}(Q)_0$ and $\varphi_0 = \mathrm{id}$. In particular, φ_1 is the projection of φ in $\mathrm{Diff}(Q)_0$.

DEFINITION 3.1. The *model hole of fibre* Q *and monodromy* φ (Figure 3) consists of the compact manifold $H_{\mathrm{mod}} := \mathbf{D}^2 \times Q$ together with a codimension-q foliation $\mathscr{H}_{\mathrm{mod}}(\varphi)$ on $\mathscr{O}p_{H_{\mathrm{mod}}}(\partial H_{\mathrm{mod}})$ such that

- $\mathscr{H}_{\mathrm{mod}}(\varphi)$ coincides with the slice foliation parallel to $\mathbf{D}^2$ in $\mathbf{D}^2 \times \mathscr{O}p_Q(\partial Q)$;
- $\mathscr{H}_{\mathrm{mod}}(\varphi)$ induces the suspension of φ on $\partial\mathbf{D}^2 \times Q$.

DEFINITION 3.2. For every compact manifold Σ (not necessarily connected), the *standard hole of core* Σ*, fibre* Q *and monodromy* φ consists of the manifold

$$H_{\Sigma,Q} := \Sigma \times \mathbf{D}^2 \times Q$$

together with the codimension-q foliation

$$\mathscr{H}(\Sigma, Q, \varphi) := (\mathrm{pr}_2 \times \mathrm{pr}_3)^*(\mathscr{H}_{\mathrm{mod}}(\varphi))$$

on $\mathscr{O}p_{H_{\Sigma,Q}}(\Sigma \times \partial(\mathbf{D}^2 \times Q))$.

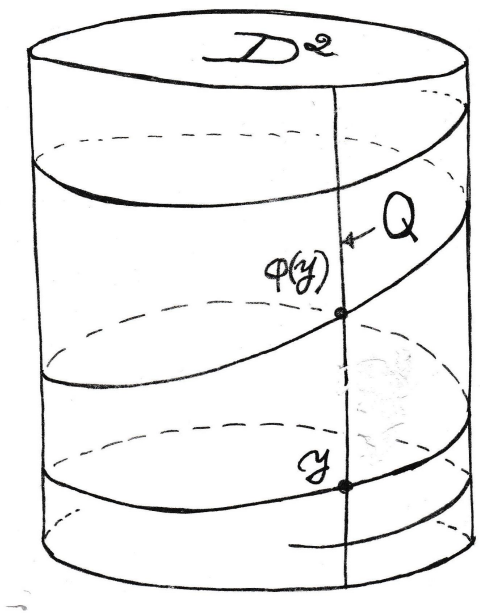

FIGURE 3. Model hole.

In fact, one is interested only on the *germ* of the foliation $\mathscr{H}(\Sigma, Q, \varphi)$ along $\Sigma \times \partial(\mathbf{D}^2 \times Q)$. Note that this germ depends only, up to an isotopy in $H_{\Sigma,Q}$, on the conjugation class of φ in $\widetilde{\mathrm{Diff}}(Q)_0$.

DEFINITION 3.3. On an m-fold M, a (Q, φ)-*holed* Γ_q-structure is a triple (Σ, h, γ) such that

- Σ is a compact $(m - q - 2)$-fold, not necessarily connected, maybe empty;
- $h : H_{\Sigma,Q} \hookrightarrow M$ is an embedding and $h^{-1}(\partial M) = \partial\Sigma \times \mathbf{D}^2 \times Q$;
- γ is a Γ_q-structure defined on $\mathscr{O}p_M(M \setminus Int(h(H_{\Sigma,Q})))$: in other words, outside the hole and slightly inside it;
- $h^*(\gamma)$ coincides with $\mathscr{H}(\Sigma, Q, \varphi)$ on $\mathscr{O}p_{H_{\Sigma,Q}}(\Sigma \times \partial(\mathbf{D}^2 \times Q))$.

A (Q,φ)-holed Γ_q-structure has a normal bundle (resp. a differential) defined on the all of M: the normal bundle (resp. differential) of γ is extended over the hole by the bundle tangent (resp. by the projection) to the $\mathbf{D}^q$ factor.

Sometimes we regard the connected components of the hole as several distinct holes.

If γ is moreover regular on $M \setminus H$, one speaks of a (Q,φ)-*holed foliation*.

DEFINITION 3.4. One calls the (Q,φ)-holed foliation (Σ, h, γ) *quasi-complementary* to the dimension-q foliation $\mathscr{F}$ on M if γ is complementary to $\mathscr{F}$ on $M \setminus h(H_{\Sigma,Q})$ and if $h^*(\mathscr{F})$ is the dimension-q slice foliation of $H_{\Sigma,Q}$ parallel to Q.

THEOREM A'. *Choose $\varphi \in \widetilde{\mathrm{Diff}}(\mathbf{D}^q)_0$ such that $\varphi_1 \neq \mathrm{id}$.*

On a compact manifold M, let $\mathscr{F}$ be a foliation of dimension $q \geq 1$, let γ be a Γ_q-structure whose normal bundle is $\tau\mathscr{F}$, and let ω be a 1-form valued in $\tau\mathscr{F}$ such that $\omega|\tau\mathscr{F}$ is of constant rank q, and such that $d\gamma = \omega$ on $\mathscr{O}p_M(\partial M)$. Let $\bar{\mathscr{F}}$ be the dimension-q foliation on $M \times \mathbf{I}$ parallel to $\mathscr{F}$.

Then, $M \times \mathbf{I}$ admits a $(\mathbf{D}^q,\varphi)$-holed Γ_q-structure $(\Sigma, h, \bar{\gamma})$ of normal bundle $\tau\bar{\mathscr{F}}$, such that:

i) $h(H_{\Sigma,\mathbf{D}^q})$ is disjoint from $\hat{M}$, and $\bar{\gamma} = \mathrm{pr}_1^*(\gamma)$ on $\mathscr{O}p_{M\times\mathbf{I}}(\hat{M})$;
ii) The triple $(\partial\Sigma, h|H_{\partial\Sigma,\mathbf{D}^q}, \gamma|(M\times 1))$ is on $M\times 1 \cong M$ a $(\mathbf{D}^q,\varphi)$-holed foliation quasi-complementary to $\mathscr{F}$; moreover its differential is homotopic (rel. ∂M) to ω through the 1-forms valued in $\tau\mathscr{F}$ of constant rank q on $\tau\mathscr{F}$.

Moreover, in the case where M is a product $V \times X$ and where $\mathscr{F}$ is its slice foliation parallel to X, one can arrange that (iii) for every connected component Σ_i of Σ, the embedding $\Sigma_i \hookrightarrow M \times \mathbf{I}$ through h covers an embedding $\Sigma_i \hookrightarrow V \times \mathbf{I}$.

The proof will be given in Section 4. The theorem *A* immediately follows from the points (i) and (ii) of Theorem *A'* by choosing the monodromy φ to be a multirotation (Definition 3.5 below) other than the identity, and then filling the holes according to Paragraph 3.1.1 below.

3.1. **Toolbox.** We shall use the following tools to modify the holes; the first is classical, the others are obvious. We consider as before a standard hole of core Σ, fibre Q and monodromy φ.

3.1.1. *Filling.* (After [26], paragraph 4) Assume that $q \geq 2$. Recall that an element φ of $\widetilde{\mathrm{Diff}}(Q)_0$ amounts to a path of diffeomorphisms $(\varphi_t)_{t\in\mathbf{I}}$ in $\mathrm{Diff}(Q)$ such that $\varphi_0 = \mathrm{id}$.

DEFINITION 3.5. $\varphi := (\varphi_t)_{t\in\mathbf{I}}$ is a *multirotation* if there are a function u as in the introduction, and an embedding F of $\mathbf{D}^{q-1} \times \mathbf{S}^1$ into the interior of Q, such that for every $t \in \mathbf{I}$:

- $\varphi_t(F(a,s)) = F(a, s + tu(1-2|a|))$ for every $a \in \mathbf{D}^{q-1}$ such that $|a| \leq 1/2$ and every $s \in \mathbf{S}^1 \cong \mathbf{R}/\mathbf{Z}$;
- φ_t is the identity on the rest of Q.

Assuming that φ is a multirotation, consider the foliation $\mathscr{H}$ of $\Sigma \times \mathbf{D}^2 \times Q$ equal to the foliation $\mathscr{G}_\Sigma$ of the introduction in $\Sigma \times (\mathbf{D}^2 \times Im(F)) \cong C_\Sigma$, and equal to the slice foliation parallel to $\Sigma \times \mathbf{D}^2$ in the complement. Clearly, $\mathscr{H}$ coincides with $\mathscr{H}(\Sigma, Q, \varphi)$ close to $\Sigma \times \partial(\mathbf{D}^2 \times Q)$. In other words, the standard hole of core Σ, fibre Q and monodromy φ can be filled with $\mathscr{H}$.

3.1.2. *Splitting.* Given a factorization $\varphi = \varphi'\varphi$" in the group $\widetilde{\mathrm{Diff}}(Q)_0$, let S be the 2-sphere minus the interiors of three disjoint compact disks. Obviously, $S \times Q$ has a codimension-q foliation $\mathscr{G}$ such that

- $\mathscr{G}$ is complementary to the slice foliation parallel to Q;
- $\mathscr{G}$ is parallel to S on a neighborhood of $S \times \partial Q$;
- $\mathscr{G}$ induces the suspensions of φ, φ', φ" on the three components of $\partial S \times Q$.

Pulling back $\mathscr{G}$ into $\Sigma \times S \times Q$, one obtains a partial filling of the standard hole of fibre Q, core Σ and monodromy φ, leaving two holes of fibre Q, core Σ and respective monodromies φ', φ".

3.1.3. *Horizontal shrinking.* Let $D \subset \mathbf{D}^2$ be a small disk centered at 0. In $H_{\Sigma,Q}$, one can extend $\mathscr{H}(\Sigma, Q, \varphi)$ radially from the vertical boundary $\Sigma \times \partial\mathbf{D}^2 \times Q$ and thus foliate the subset $\Sigma \times (\mathbf{D}^2 \setminus D) \times Q$, leaving a thinner hole $\Sigma \times D \times Q$ with the same core, fibre and monodromy.

3.1.4. *Vertical shrinking.* If $Q' \subset Q$ is a domain containing the support of φ in its interior, then in $H_{\Sigma,Q}$ we can foliate the subset $\Sigma \times \mathbf{D}^2 \times Q'$ by the horizontal slice foliation parallel to $\Sigma \times \mathbf{D}^2$, leaving a smaller hole $\Sigma \times D \times Q$ with core Σ, fibre Q' and monodromy $\varphi|Q'$.

3.1.5. *Reparametrizing.* In a (Q, φ)-holed Γ_q-structure (Definition 3.3), we can change the embedding h by precomposing it with any self-diffeomorphism of $\Sigma \times \mathbf{D}^2 \times \mathbf{D}^q$ of the form $F \times \mathrm{id}_{\mathbf{D}^q}$, where F is a self-diffeomorphism of $\Sigma \times \mathbf{D}^2$ which is the identity on a neighborhood

of $\Sigma \times \partial \mathbf{D}^2$. Indeed, F preserves the germ of $\mathscr{H}(\Sigma, Q, \varphi)$ along $\Sigma \times \partial(\mathbf{D}^2 \times Q)$.

4. Proof of Theorem *A'*.

In a first time, we only pay attention to the properties (i)–(ii); for (iii), see Paragraph 4.4.

4.1. **Foliating a neighborhood of a codimension-1 skeleton transversely to $\mathscr{F}$.** Following a classical scheme, a first part of the proof of Theorem *A'* will solve the problem on a small neighborhood of the codimension-1 skeleton of a triangulation of a large part of M; this part is somehow standard, pertaining to Gromov's h-principle on open manifolds, with the help of Thurston's jiggling lemma.

Let M, $\mathscr{F}$, γ, ω be as in Theorem *A'*. By the Jiggling lemma ([26] section 5), one has a compact domain $D \subset Int(M)$, large enough that $\omega = d\gamma$ holds on an open neighborhood of $M \setminus Int(D)$, and a triangulation K of D which is in *general position,* in Thurston's sense, with respect to $\mathscr{F}$; we only need to recall that every simplex S of K is transverse to $\mathscr{F}$ (for $\dim(S) < p$, "transverse" means that there is no tangency) and that, for $\dim(S) \geq p$, the foliation $\mathscr{F}|Int(S)$ is conjugate to the standard linear codimension-p foliation on $\mathbf{R}^{\dim(S)}$.

Consider a simplex S of K not contained in ∂D; by induction on the dimension d of S, assume that $\omega = d\gamma$ already holds on some neighborhood U of ∂S in M. We work in a kind of small tubular neighborhood of S in some convenient position with respect to $\mathscr{F}$; there are two cases.

In case $d \leq p$, one has an embedding e of $S \times \mathbf{D}^{p-d} \times \mathbf{D}^q$ in a small neighborhood of S such that

- $e(x, 0, 0) = x$ for every $x \in S$;
- e maps $\partial S \times \mathbf{D}^{p-d} \times \mathbf{D}^q$ into U;
- $e^*(\mathscr{F})$ is the slice foliation on $S \times \mathbf{D}^{p-d} \times \mathbf{D}^q$ parallel to the $\mathbf{D}^q$ factor.

Apply the integrable parametric Foliation theorem on open manifolds (Theorem 2.3 of Paragraph 2.0.7) to the manifold $\mathbf{D}^q$ (which is open in the sense that it is connected with nonempty boundary), the space of parameters being $S \times \mathbf{D}^{p-d}$: after a concordance of γ and a homotopy of ω, both supported in a small neighborhood of S and relative to a small neighborhood of ∂S, one gets $\omega = d\gamma$ on some neighborhood of S.

In case $d \geq p$, one has an embedding e of $\mathbf{D}^p \times \mathbf{D}^{d-p} \times \mathbf{D}^{p+q-d}$ in a small neighborhood of S such that

- $e^{-1}(S) = \mathbf{D}^p \times \mathbf{D}^{d-p} \times 0$;
- e maps $\partial(\mathbf{D}^p \times \mathbf{D}^{d-p}) \times \mathbf{D}^{p+q-d}$ into U;
- $U \cup e(\mathbf{D}^p \times \mathbf{D}^{d-p} \times \mathbf{D}^{p+q-d})$ is a neighborhood of S;
- $e^*(\mathscr{F})$ is the slice foliation on $\mathbf{D}^p \times \mathbf{D}^{d-p} \times \mathbf{D}^{p+q-d}$ parallel to the $\mathbf{D}^{d-p} \times \mathbf{D}^{p+q-d}$ factor.

Apply the integrable parametric Foliation theorem on open manifolds to the open manifold $\mathbf{D}^{d-p} \times \mathbf{D}^{p+q-d}$, the space of parameters being $\mathbf{D}^p$: after a concordance of γ and a homotopy of ω, both supported in a small neighborhood of S and relative to a small neighborhood of ∂S, one gets $\omega = d\gamma$ on some neighborhood of S. The induction is complete.

4.2. **Foliating a neighborhood of $\hat{M}$ transversely to $\bar{\mathscr{F}}$.** It remains to extend the construction through the interior of each $(p+q)$-simplex of the triangulation K. In other words, the proof of Theorem *A'* is reduced to the case where $M := \mathbf{D}^p \times \mathbf{D}^q$, and where $\mathscr{F}$ is the slice foliation parallel to $\mathbf{D}^q$. We restrict the attention to this case.

In Theorem *A'*, a certain Γ_q-structure $\mathrm{pr}_1^*(\gamma)|\hat{M}$ is given on $\hat{M}$, and one asks for extending it through $\bar{M}$ by a Γ_q-structure matching certain properties on a neighborhood of $M \times 1$; this extension being already realized on a neighborhood of $\partial M \times 1$. Clearly, the existence of such an extension depends only on the concordance class, relatively to $\partial M \times 1$, of the Γ_q-structure given on $\hat{M}$. Hence, Theorem *A'* (reduced to (i) and (ii)) will result immediately from Lemma 4.1 and Proposition 4.2 below.

Consider on $\bar{M}$ the dimension-q slice foliation $\bar{\mathscr{F}}$ parallel to $\mathbf{D}^q$; the $\bar{\Gamma}_q$-structure $\mathrm{pr}_1^*(\gamma)$, where $\mathrm{pr}_1 : M \times \mathbf{I} \to M$ is the first projection; and the $\mathbf{R}^q$-valued 1-form $\mathrm{pr}_1^*(\omega)$ of constant rank q on $\tau\bar{\mathscr{F}}$.

LEMMA 4.1. *There is on $\mathscr{O}p_{\bar{M}}(\hat{M})$ a foliation $\mathscr{G}$ complementary to $\bar{\mathscr{F}}$ there, induced by $\mathrm{pr}_1^*(\gamma)$ on $\mathscr{O}p_{\bar{M}}(\partial M \times 1)$, concordant to $\mathrm{pr}_1^*(\gamma)$ (rel. $\partial M \times 1$), and whose differential is homotopic to $\mathrm{pr}_1^*(\omega)$ among the $\mathbf{R}^q$-valued 1-forms of rank q on $\tau\bar{\mathscr{F}}$ (rel. $\partial M \times 1$).*

Proof. In fact, the concordance will be relative to the subset

$$X := (\mathbf{S}^{p-1} \times \mathbf{D}^q \times \mathbf{I}) \cup (\mathbf{D}^p \times \mathbf{S}^{q-1} \times 1) \subset \hat{M} \subset \bar{M}$$

which contains $\partial M \times 1$.

The integrable parametric Foliation theorem 2.3 is first applied to γ and ω on the open manifold $\mathbf{D}^q$, the pair of parameters spaces being

$$(A, B) := (\mathbf{D}^p, \mathbf{S}^{p-1})$$

One gets on $M \cong M \times 0$ a foliation $\mathscr{G}_0$ complementary to $\mathscr{F}$ there, induced by γ on $\mathscr{O}p_{M\times 0}(\mathbf{S}^{p-1} \times \mathbf{D}^q \times 0)$, concordant to γ (rel. $\mathbf{S}^{p-1} \times \mathbf{D}^q \times 0$), and whose differential $d\mathscr{G}_0$ is homotopic (rel. $\mathbf{S}^{p-1} \times \mathbf{D}^q \times 0$) to ω among the forms whose restriction to $\tau\mathscr{F}$ is of constant rank q.

Next, by the concordance extension property for Γ_q-structures (see Paragraph 2.0.5) (resp. by the Homotopy extension property for sections of a bundle), $\mathscr{G}_0$ (resp. $d\mathscr{G}_0$) is extended over $\mathscr{O}p_{\bar{M}}(\hat{M})$ by a $\bar{\Gamma}_q$-structure $\hat{\gamma}$ (resp. a form $\hat{\omega}$ of rank q on $\tau\bar{\mathscr{F}}$), induced by $\mathrm{pr}_1^*(\gamma)$ on $\mathscr{O}p_{\bar{M}}(X)$, concordant to $\mathrm{pr}_1^*(\gamma)$ (resp. homotopic to $\mathrm{pr}_1^*(\omega)$ among the forms of rank q on $\tau\bar{\mathscr{F}}$) rel. X.

Then, the integrable parametric Foliation theorem 2.3 is applied to $\hat{\gamma}$ and $\hat{\omega}$ on the open manifold $\mathbf{S}^{q-1}\times\mathbf{I}$, seen as a small collar neighborhood of $\partial\mathbf{D}^q$ in $\mathbf{D}^q$; the pair of parameters spaces being

$$(A, B) := (\mathbf{D}^p \times \mathbf{I}, \partial(\mathbf{D}^p \times \mathbf{I}))$$

□

Note that, when we have changed $\mathrm{pr}_1^*(\gamma)$ to $\mathscr{G}$, the tangentiality to $\mathbf{D}^p \times \mathbf{S}^{q-1} \times \mathbf{I}$ has been lost. The position of $\mathscr{G}$ with respect to $\mathbf{D}^p \times \mathbf{S}^{q-1} \times \mathbf{I}$ is now arbitrary.

4.3. **Inflation.** Recall that $M = \mathbf{D}^p \times \mathbf{D}^q$ $(p, q \geq 1)$, that $\bar{M} = M \times \mathbf{I}$, that $\hat{M} = (M \times 0) \cup (\partial M \times \mathbf{I}) \subset \bar{M}$, and that $\bar{\mathscr{F}}$ is the q-dimensional slice foliation of $\bar{M}$ parallel to the $\mathbf{D}^q$ factor. Let φ be as in Theorem *A'*.

PROPOSITION 4.2. *Let $\mathscr{G}$ be along $\hat{M}$ a germ of foliation complementary to $\bar{\mathscr{F}}$ there.*

Then, $\mathscr{G}$ extends to all of $\bar{M}$ as a $(\mathbf{D}^q, \varphi)$-holed foliation quasi-complementary to $\bar{\mathscr{F}}$.

Note — Here, the fact that disks are disks is actually unimportant: the same result would hold for any two compact manifolds instead of $\mathbf{D}^p$ and $\mathbf{D}^q$, with the same proof.

Proof. The rest of the present subsection 4.3 is to prove Proposition 4.2. The difficulty lies in the arbitrary position of $\mathscr{G}$ with respect to $\mathbf{D}^p \times \mathbf{S}^{q-1} \times \mathbf{I}$. The "inflation" method introduced by Thurston [26][28] to prove the Foliation theorem on closed manifolds will fit to solve this difficulty, after some adjustment.

We shall decompose the most part of $\bar{M}$, containing the part not already foliated, into "prisms", each of which $\alpha \times \mathbf{D}^q$ will be the product of a small simplex α of dimension at most $p+1$ by the compact q-ball, embedded in $\bar{M}$ through an embedding e_α such that every parallel to

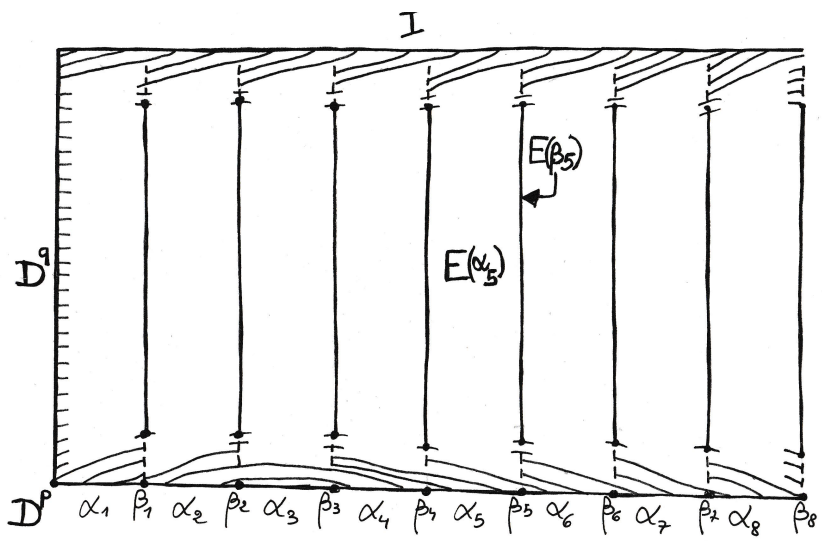

FIGURE 4. Decomposition of the most part of $\bar{M}$ into prisms, in the case $p = 0$, $q = 1$.

$\mathbf{D}^q$ is mapped onto almost all of a leaf of $\bar{\mathscr{F}}$, and that $\alpha \times \partial\mathbf{D}^q$ is mapped tangentially to $\mathscr{G}$ (precisely, for every $y \in \partial\mathbf{D}^q$, the slice $\alpha \times y$ will be a leaf of $e_\alpha^*(\mathscr{G})$). Then, we shall adapt the original inflation method to this prismatic cellulation: the prisms will be foliated (with holes) one after the other, in the order given by a collapse of a fine triangulation of $\mathbf{D}^p \times \mathbf{I}$ onto $(\mathbf{D}^p \times 0) \cup (\mathbf{S}^{p-1} \times \mathbf{I})$.

We give the details for three reasons. First, our frame is not exactly the same as Thurston's; we foliate prisms, he foliated simplices; in fact, the inflation method seems simpler and more natural in our frame than in the original one. Second, some have believed that the argument in [26] was difficult, or even not fully convincing — of course, it is not the case. Third, we feel that "inflation" deserves to be used more widely as a general method in the h-principle, which it has not been, since the fundamental papers [26][28], but in [14].

4.3.1. *Constructing the prisms.* (Figure 4) To fix ideas, endow $\bar{M} = \mathbf{D}^p \times \mathbf{D}^q \times \mathbf{I} \subset \mathbf{R}^p \times \mathbf{R}^q \times \mathbf{R}$ with the Euclidian Riemannian metric. Denote by $\bar{\pi} : \bar{M} \to \mathbf{D}^p \times \mathbf{I}$ the projection to the first and third factors. In $\mathbf{R}^q$, denote by D_r (resp. S_r) (resp. C_r) the compact disk

(resp. sphere) (resp. corona) defined by $|y| \leq r$ (resp. $|y| = r$) (resp. $r \leq |y| \leq 1$).

The foliation $\mathscr{G}$ is already defined, for some $\epsilon > 0$, on the open (2ϵ)-neighborhood of $\partial M \times \mathbf{I}$, and complementary to $\bar{\mathscr{F}}$ in this neighborhood.

Consider the partially defined monodromy of $\mathscr{G}$. Precisely, for a path $u : \mathbf{I} \to \mathbf{D}^p \times \mathbf{I}$ and for $y \in \mathbf{D}^q$, denote by $(u(1), h_u(y)) \in (\mathbf{D}^p \times \mathbf{I}) \times \mathbf{D}^q$ the extremity of the path (if any) in $\bar{M}$ originated at $(u(0), y)$, lifting u through $\bar{\pi}$, and tangential to $\mathscr{G}$. Let $\delta > 0$ be small enough that:

(*) *The monodromy $h_u(y)$ is defined whenever the length $|u|$ is at most δ, and $y \in S_{1-\epsilon}$.*

Of course, as $|u|$ goes to 0, the embedding h_u of the hypersphere $S_{1-\epsilon}$ into $\mathbf{D}^q$ goes to the identity in the C^1 topology, uniformly with respect to u; fix δ small enough that moreover:

(**) *For every u with $|u| \leq \delta$, the q-ball bounded by $h_u(S_{1-\epsilon})$ in $\mathbf{D}^q$ is starred with respect to the point $0 \in \mathbf{D}^q$.*

Fix a smooth triangulation K of $\mathbf{D}^p \times \mathbf{I}$ which collapses onto its subcomplex $K_0 := (\mathbf{D}^p \times 0) \cup (\mathbf{S}^{p-1} \times \mathbf{I})$; such a collapse can be regarded as a filtration of K by subcomplexes (K_n) $(0 \leq n \leq N)$ such that $K_N = K$, and such that for every $1 \leq n \leq N$, exactly two cells α_n, β_n lie in K_n but not in K_{n-1}; moreover β_n is a hyperface of α_n.

Recall that a smooth triangulation means a homeomorphism of a *linear* simplicial complex with $\mathbf{D}^p \times \mathbf{I}$, embedding smoothly every simplex. In particular, every simplex α of K is endowed with an affine structure. One can moreover choose K so fine that every linear segment $[x, x']$ in α is of length at most δ in $\mathbf{D}^p \times \mathbf{I}$. One has:

(***) *For every three points, $x, x', x" \in \alpha$ and every $y \in S_{1-\epsilon}$, the monodromy $h_{[x',x"]}(h_{[x,x']}(y))$ is defined, and equals $h_{[x,x"]}(y)$.*

Indeed, for $t \in \mathbf{I}$, consider $x_t := (1-t)x' + tx"$ and $y_t := h_{[x,x_t]}(y)$. Clearly, y_t depends continuously on t and belongs to the leaf of $\mathscr{G}$ through the point (x, y); hence the path $t \mapsto (x_t, y_t)$ lifts the path $[x', x"]$ tangentially to $\mathscr{G}$.

Denote by $\flat(\alpha)$ the barycenter of α.

For every simplex α of K and every point $x \in \alpha$, consider the intersection $I(\alpha, x)$ of the compact q-balls bounded in $\mathbf{D}^q$ by the hyperspheres $h_{[\flat(\sigma),x]}(S_{1-\epsilon})$, where σ ranges over the $(p+1)$-cells of K containing α.

LEMMA 4.3.

i) $I(\alpha, x) \subset Int(\mathbf{D}^q)$ is a compact domain homeomorphic to the q-ball (but whose boundary is not necessarily smooth);

ii) $x, x' \in \alpha$ *implies* $I(\alpha, x') = h_{[x,x']}(I(\alpha, x))$*;*
iii) $\alpha \subset \alpha'$ *implies* $I(\alpha, x) \subset I(\alpha', x)$*.*

Proof. i) Indeed, by (**), the domain $I(\alpha, x)$ is starred with respect to 0.

ii) Follows at once from (***) applied, in every $(p+1)$-simplex σ containing α, to the two triples $(\flat(\sigma), x, x')$ and $(\flat(\sigma), x', x)$.

iii) Obvious. □

To avoid irrelevant technicalities when we shall be constructing the foliation (Paragraph 4.3.2), it is more convenient to consider, instead of each $I(\alpha, x)$, a slightly smaller, *smoothly* embedded q-ball.

LEMMA 4.4. *There is, for every simplex* α *of* K *and every point* $x \in \alpha$*, a domain* $F(\alpha, x) \subset Int(I(\alpha, x))$ *such that*

(1) $F(\alpha, x)$ *is a smoothly embedded compact* q*-ball;*
(2) $F(\alpha, x) = h_{[\flat(\alpha), x]}(F(\alpha, \flat(\alpha)))$*;*
(3) $\beta \subsetneq \alpha$ *and* $x \in \beta$ *imply* $F(\beta, x) \subset Int(F(\alpha, x))$*.*

Proof. By induction on $\dim(\alpha)$. Assume that this already holds for every simplex whose dimension is less than $\dim(\alpha)$. Then, consider the union

$$U(\alpha) := \bigcup_{\beta \subsetneq \alpha} h_{[\flat(\beta), \flat(\alpha)]}(F(\beta, \flat(\beta)))$$

By the induction hypothesis (3) applied to β and by (ii) and (iii) of Lemma 4.3, the compact set $U(\alpha)$ is interior to $I(\alpha, \flat(\alpha))$. Then, define $F(\alpha, \flat(\alpha))$ such that (1) holds at $x = \flat(\alpha)$, and large enough to contain $U(\alpha)$. Then, define $F(\alpha, x)$ at every $x \in \alpha$ by (2). Thus, (1) is immediate; while (3) follows from the induction hypothesis (2) applied to β. □

By (1) and (2) of Lemma 4.4, the union $E(\alpha)$ of the balls $x \times F(\alpha, x)$, for all $x \in \alpha$, is the image of a smooth embedding $e_\alpha : \alpha \times \mathbf{D}^q \hookrightarrow \bar{M}$ covering the identity of α and sending $\alpha \times y$, for every $y \in \mathbf{S}^{q-1}$, into a leaf of $\mathscr{G}$. Write $E_n \subset \bar{M}$ for the union of the $E(\alpha)$'s, where α ranges over the cells of K_n.

4.3.2. *Foliating the prism.* Let $C \subset \bar{M}$ be the compact neighborhood of $\mathbf{D}^p \times \mathbf{S}^{q-1} \times \mathbf{I}$ obtained as the union of the complements $(Int(\alpha) \times \mathbf{D}^q) \setminus Int(E(\alpha))$, for all cells α of K. At the beginning of the inflation process, the foliation $\mathscr{G}$ is defined over a small open neighborhood of $C \cup E_0$ in $\bar{M}$ (Figure 4). By induction on n, assume that $\mathscr{G}$ has already been extended, as a *holed* foliation quasi-complementary to $\bar{\mathscr{F}}$, over a small open neighborhood of $C \cup E_{n-1}$; here we generalize slightly

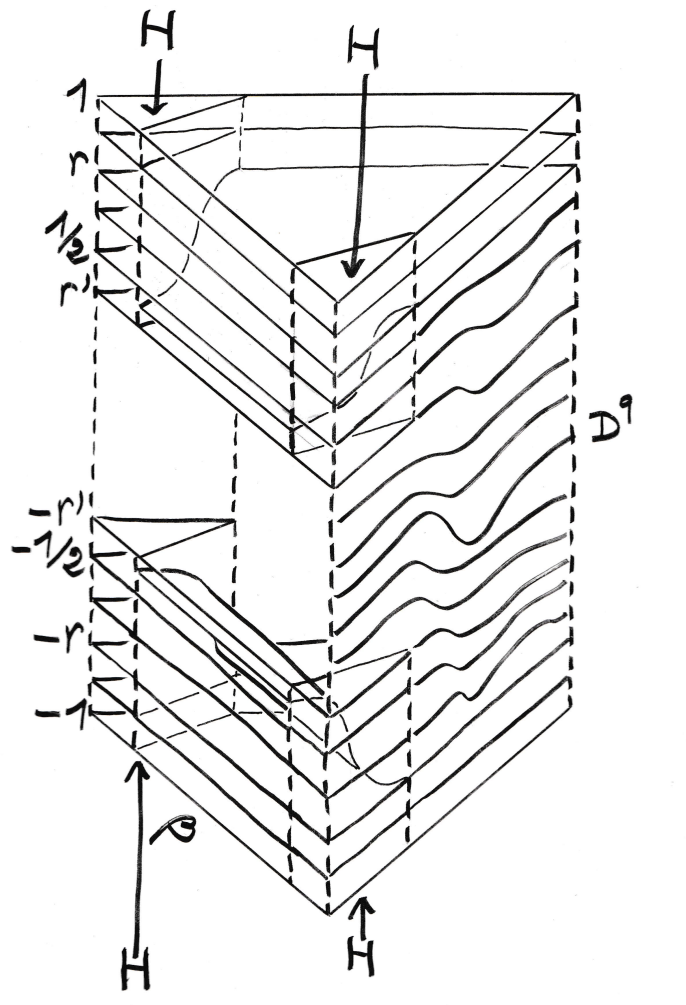

FIGURE 5. Foliating the prism, in the case $i = q = 1$.

Definitions 3.2, 3.3 and 3.4 for an ambient manifold which is noncompact without boundary, by allowing Σ to be also noncompact without boundary; the embedding h must be proper. All the successive extensions will be called $\mathscr{G}$. We have to extend $\mathscr{G}$ again through a small open neighborhood of $E(\alpha_n)$ in $\bar{M}$, preserving the quasi-complementarity property. We first describe the extension to $E(\alpha_n)$ itself (Figure 5); then, in Paragraph 4.3.4, we shall "microextend" $\mathscr{G}$ from $E(\alpha_n)$ to a small open neighborhood of $E(\alpha_n)$.

For short, we shall write α, β instead of α_n, β_n; and $i := \dim(\beta)$. Endow α with the affine coordinates $x_0, \ldots, x_{i+1}$ relative to its vertices, such that $\beta = {x_0}^{-1}(0)$. Let $\partial'\alpha$ be the union of the hyperfaces of α other

than β; choose the embedding e_α such that ${e_\alpha}^{-1}(E(\beta)) = \beta \times D_{1/2}$; identify $E(\alpha)$ with $\alpha \times \mathbf{D}^q$ through e_α.

The holed foliation $\mathscr{G}$ is already defined, and quasi-complementary to $\bar{\mathscr{F}}$, over three small open neighborhoods N_1, N_2, N_3 in $\alpha \times \mathbf{D}^q$ of three subsets of $\partial(\alpha \times \mathbf{D}^q)$: respectively $\alpha \times \mathbf{S}^{q-1}$, $\beta \times C_{1/2}$, $\partial'\alpha \times \mathbf{D}^q$. Precisely,

- $N_1 := \alpha \times C_r$, for some real r slightly smaller than 1; for a good choice of e_α, one can arrange that $\mathscr{G}$ is horizontal (i.e. parallel to α) on N_1;
- $N_2 := {x_0}^{-1}([0,\eta]) \times C_{r'}$, for some small $\eta > 0$ and some real r' slightly smaller than $1/2$; for a good choice of e_α, one can arrange that $\mathscr{G}$ is also horizontal on N_2 (since $\mathscr{G}|(\beta \times C_{1/2})$ is a trivial foliated product over β);
- N_3 is the Cartesian product of some small open neighborhood of $\partial'\alpha$ in α, by $\mathbf{D}^q$.

In general, for $i = 1$, on $(\partial\alpha) \times C_{1/2}$ the foliation $\mathscr{G}$ can have some holonomy; for $i \geq 2$, on $\partial'\alpha \times \mathbf{D}^q$ the foliation $\mathscr{G}$ can be complicated, and already holed; for $i \geq 3$, on $\partial\beta \times D_{1/2}$ the foliation $\mathscr{G}$ can be complicated, and already holed.

Let ∇ (resp. $\bar{\nabla}$) be the constant vector field on α (resp. on $\alpha \times \mathbf{D}^q$) parallel to the vector $\flat(\beta) - \flat(\alpha)$.

On N_3, since $\mathscr{G}$ is quasi-complementary to $\bar{\mathscr{F}}$ and $\bar{\nabla}$ is transverse to $\partial'\alpha \times \mathbf{D}^q$, there is an isotopy f of N_3, vertical (in the sense that $\bar{\pi} \circ f = f$), relative to $\partial'\alpha \times \mathbf{D}^q$ and to $(N_1 \cup N_2) \cap N_3$, and such that $f_*(\bar{\nabla}) \subset \tau\mathscr{G}$ on the complement of the holes. Extend f through $\alpha \times \mathbf{D}^q$ by a global vertical isotopy relative to $N_1 \cup N_2$, also denoted by f. Changing e_α to $e_\alpha \circ f$, we can arrange that on N_3, the horizontal vector field $\bar{\nabla}$ is tangential to $\mathscr{G}$ on the complement of the holes.

Consider any vector field $\tilde{\nabla}$ on $\alpha \times \mathbf{D}^q$, coinciding with $\bar{\nabla}$ on $N_1 \cup N_2 \cup N_3$, and lifting ∇ through $\bar{\pi}$ (in particular, $\tilde{\nabla}$ being projectable through $\bar{\pi}$, the flow of $\tilde{\nabla}$ will preserve $\bar{\mathscr{F}}$). Let $\mathscr{G}_{\tilde{\nabla}}$ be on $\alpha \times \mathbf{D}^q$ the pullback of $\mathscr{G}|(\partial'\alpha \times \mathbf{D}^q)$ through the flow of $\tilde{\nabla}$. This is a first candidate for extending $\mathscr{G}$ over $\alpha \times \mathbf{D}^q$. Clearly, $\mathscr{G}_{\tilde{\nabla}}$ is a holed foliation quasi-complementary to $\bar{\mathscr{F}}$ on $\alpha \times \mathbf{D}^q$ (by the induction hypothesis, and since the flow of $\tilde{\nabla}$ preserves $\bar{\mathscr{F}}$); and $\mathscr{G}_{\tilde{\nabla}}$ coincides with $\mathscr{G}$ over $N_1 \cup N_3$. But for $i \geq 1$, in general no choice of $\tilde{\nabla}$ will make $\mathscr{G}_{\tilde{\nabla}}$ match $\mathscr{G}$ over $\beta \times C_{1/2}$; this is why a new hole is necessary.

Fix a self-diffeomorphism v of $\mathbf{I}$, supported in the open interval $(r', 1)$ and such that $v(r) \leq 1/2$; define the self-diffeomorphism ψ_1 of $C_{r'}$ as $\psi_1(y) := v(|y|)|y|^{-1}y$; fix a 1-parameter family of self-diffeomorphisms

$\psi := (\psi_t)_{t\in\mathbf{I}}$ of $C_{r'}$, supported in the interior of $C_{r'}$, such that $\psi_t = \mathrm{id}$ for t close to 0 and $\psi_t = \psi_1$ for t close to 1.

Let $\mathrm{pr} : \alpha \to \beta$ be the projection parallelly to $\flat(\beta) - \flat(\alpha)$; decompose α into the three subpolyhedra

$$P := {x_0}^{-1}[\eta, 1]$$
$$P' := {x_0}^{-1}[0, \eta] \cap \mathrm{pr}^{-1}(\mathrm{pr}(P))$$
$$P" := \mathrm{pr}^{-1}(\beta \setminus Int(\mathrm{pr}(P)))$$

Hence, P is a simplex, P' is a prism whose base is a hyperface of P and whose heigth is parallel to ∇, and $P"$ is a small polyhedral tubular neighborhood of $\partial\beta$ in α. The new hole will, in a first time, be $H := P'' \times C_{r'}$. On $(\alpha \times \mathbf{D}^q) \setminus H$, extend $\mathscr{G}$ as the pullback $\mathscr{G}_{\tilde{\nabla}}$ of $\mathscr{G}|(\partial'\alpha \times \mathbf{D}^q)$ by the flow of the vector field $\tilde{\nabla}$ coinciding with $\bar{\nabla}$ on $(P \times \mathbf{D}^q) \cup (\alpha \times D_{r'})$; while on $P' \times C_{r'}$,

$$\tilde{\nabla} := (\flat(\beta) - \flat(\alpha), \frac{1}{\tau}\frac{\partial\psi_t}{\partial t} \circ {\psi_t}^{-1})$$

where $\tau := \eta/b(\flat(\alpha)) = \eta/(i+2)$. In particular, the time τ of the flow maps $b^{-1}(\eta) \times C_{r'}$ into $\beta \times C_{r'}$ as

$$(x, y) \mapsto (x + (i+2)\eta(\flat(\beta) - \flat(\alpha)), \psi_1(y))$$

Since $v(r) < 1/2$, the foliation $\mathscr{G}_{\tilde{\nabla}}$ does match $\mathscr{G}$ in restriction to $\beta \times C_{1/2}$. The extension of $\mathscr{G}$ to $E(\alpha_n)$ is complete, except that the new hole H has for fibre the corona $C_{r'}$ instead of the ball $\mathbf{D}^q$, and for monodromy $\psi := (\psi_t)_{t\in\mathbf{I}}$ instead of the prescribed $\varphi = (\varphi_t)_{t\in\mathbf{I}}$.

4.3.3. *Rectifying the hole.* Fix an arbitrary embedding of $\mathbf{D}^q$ in the interior of $C_{r'}$, hence φ_1 (resp. φ) becomes a self-diffeomorphism of $C_{r'}$ (resp. an element of the universal cover $\widetilde{\mathrm{Diff}}(C_{r'})_0$). It is easy to choose the diffeomorphism v in $\mathrm{Diff}(\mathbf{I})$ as a product of commutators, hence so is ψ_1 in $\mathrm{Diff}(C_{r'})_0$. Since φ_1 is not the identity, by Epstein's perfectness theorem ([7], Proposition 1.2 and Theorem 1.4), ψ_1 belongs to the normal subgroup of $\mathrm{Diff}(C_{r'})_0$ generated by φ_1; hence some lift $\psi \in \widetilde{\mathrm{Diff}}(C_{r'})_0$ of ψ_1 in the universal cover belongs to the normal subgroup of $\widetilde{\mathrm{Diff}}(C_{r'})_0$ generated by φ. In the above construction, one can choose the family (ψ_t) to represent this particular lift ψ.

With this choice, by Tool 3.1.2, the hole H splits into a finite number of smaller holes of core $\mathbf{S}^{i-1}$, fibre $C_{r'}$ and monodromy φ (recall the note after Definition 3.2).

Finally, by a vertical shrinking (Tool 3.1.4), each of these smaller holes becomes of core $\mathbf{S}^{i-1}$, fibre $\mathbf{D}^q$ and monodromy φ. It is convenient to make sure, by a slight horizontal shrinking (Tool 3.1.3) and a slight

further vertical shrinking, that each of these smaller holes is *interior* to $E(\alpha_n)$.

4.3.4. *Microextension.* We have just constructed a holed foliation $\mathscr{G}$ on $E(\alpha)$; we now have to extend it to a small neighborhood of $E(\alpha)$ in $\bar{M}$. The process, which is a simpler form of Thurston's "civilization" [26], deserves a little care.

Given a manifold X and a submanifold with boundary $Y \subset Int(X)$, let $\nu_X Y$ be its normal bundle, and $Z : Y \to \nu_X Y$ be the zero section. By a "tubular neighborhood" of Y in X, we simply mean an embedding j into X of the compact unit ball subbundle of $\nu_X Y$, such that $j \circ Z = \mathrm{id}_Y$. (Hence, if ∂Y is not empty, it is not actually a neighborhood of ∂Y).

One begins with the boundary: one will first make an extension of $\mathscr{G}$ to a small neighborhood of $E(\beta)$ in $\bar{M}$. To this end, consider a small tubular neighborhood $T_\beta \subset \bar{M}$ of $E(\beta)$ in $\bar{M}$ Consider the projection $\mathrm{pr}_\beta : T_\beta \to E(\beta)$, whose fibres are small $(p+1-i)$-disks.

Recall that $\mathscr{G}$ is already defined on a neighborhood U of $\partial E(\beta)$ in $\bar{M}$, and quasi-complementary to $\bar{\mathscr{F}}$ on U; in particular, $\mathscr{G}$ is transverse to $E(\beta)$ on the complement of the holes. Shrinking T_β and pushing T_β by an isotopy f of $\bar{M}$ relative to $E(\beta)$ and which is vertical (in the sense that $\bar{\pi} \circ f = \bar{\pi}$), one can arrange that moreover, for every point $x \in E(\beta)$ close enough to $\partial E(\beta)$ and not in a hole of $\mathscr{G}$, the fibre ${\mathrm{pr}_\beta}^{-1}(x)$ is tangential to $\mathscr{G}$ (in the sense that this fibre is contained in a leaf of $\mathscr{G}$).

In the same way, since $\mathscr{G}$ is also already defined (as a holed foliation) on $E(\alpha)$, and quasi-complementary to $\bar{\mathscr{F}}$ in $E(\alpha)$, shrinking T_β and pushing T_β by a second vertical isotopy of $\bar{M}$ relative to $\partial E(\alpha)$, one can arrange that moreover, for every point $x \in E(\beta)$ not in a hole of $\mathscr{G}$, the fibre ${\mathrm{pr}_\beta}^{-1}(x) \cap E(\alpha)$ of $\mathrm{pr}_\beta | E(\alpha)$ over x is tangential to $\mathscr{G}$.

Then, $\mathrm{pr}_\beta^*(\mathscr{G}|E(\beta))$ is on T_β a $(\mathbf{D}^q, \varphi)$-holed codimension-q foliation, quasi-complementary to $\bar{\mathscr{F}}$, coinciding with $\mathscr{G}$ on $\mathscr{O}p_{T_\beta}(\partial E(\beta))$ and on $E(\alpha) \cap T_\beta$. This extension of $\mathscr{G}$ to T_β is also denoted by $\mathscr{G}$.

Finally, a similar method will complete the extension of $\mathscr{G}$ to a small neighborhood of $E(\alpha)$: consider a small tubular neighborhood $T_\alpha \subset \bar{M}$ of $E(\alpha)$ in $\bar{M}$ and the projection $\mathrm{pr}_\alpha : T_\alpha \to E(\alpha)$ whose fibres are small $(p-i)$-disks. Since $\mathscr{G}$ is already defined (as a holed foliation) on a neighborhood V of $\partial E(\alpha)$ in $\bar{M}$, and quasi-complementary to $\bar{\mathscr{F}}$ in V, shrinking T_α and pushing T_α by a vertical isotopy of $\bar{M}$ relative to $E(\alpha)$, one can arrange that moreover, for every point $x \in E(\alpha)$ close enough to $\partial E(\alpha)$ and not in a hole of $\mathscr{G}$, the fibre ${\mathrm{pr}_\alpha}^{-1}(x)$ is tangential to $\mathscr{G}$. Then, $\mathrm{pr}_\alpha^*(\mathscr{G})$ is on T_α a $(\mathbf{D}^q, \varphi)$-holed codimension-q foliation

quasi-complementary to $\bar{\mathscr{F}}$, coinciding with $\mathscr{G}$ on $\mathscr{O}p_{T_\alpha}(\partial E(\alpha))$ and on $E(\alpha)$.

This completes the induction on n, the proof of Proposition 4.2, and the proof of Theorem *A'* ((i) and (ii)).

For the use of the next paragraph 4.4, we moreover choose the tubular neighborhoods to be projectable through $\bar{\pi}$. Precisely, the image $\bar{\pi}(T_\beta)$ (resp. $\bar{\pi}(T_\alpha)$) is a tubular neighborhood of the simplex β (resp. α) in $\mathbf{D}^p \times \mathbf{I}$, and the projection pr_β (resp. pr_α) covers through $\bar{\pi}$ the projection map of $\bar{\pi}(T_\beta)$ (resp. $\bar{\pi}(T_\alpha)$) onto β (resp. α). □

4.4. **Topology, propagation and projections of the holes.** (Figure 6) Let us think to the topology of each hole resulting from the inflation process, and to its projection through $\bar{\pi}$. This is much like the discussion in [28], paragraph 7. After Thurston's expression, during the process, the hole "propagates".

Consider a hole created while foliating the prism $E(\alpha_n)$, for some $1 \leq n \leq N$ (a shrinking of one of the components of the splitting of H, see Paragraph 3.1.2 above.) At its creation:

(1) This hole is an embedding $h : \Sigma \times \mathbf{D}^2 \times \mathbf{D}^q \hookrightarrow Int(\bar{M})$ where $\Sigma := \mathbf{S}^{i-1}$ and $i := \dim(\alpha_n) - 1$;
(2) The image of h is interior to $E(\alpha_n)$;
(3) $h|\Sigma \times 0 \times 0$ covers an embedding $k : \Sigma \hookrightarrow \mathbf{D}^p \times \mathbf{I}$ through $\bar{\pi}$;
(4) The image $k(\Sigma)$ is an $(i-1)$-sphere closely parallel to $\partial\beta_n$.

During the next microextension (Paragraph 4.3.4), the hole is pulled back through pr_{α_n} (because of (2)), hence the core Σ becomes $\mathbf{S}^{i-1} \times \mathbf{D}^{p-i}$. Property (3) is preserved because pr_{α_n} is projectable through $\bar{\pi}$.

During the rest of the inflation process, for each m in the range $[n+1, N]$, the hole is pulled back thrice:

First, in the prism $E(\alpha_m)$, the intersection of the hole with $e_{\alpha_m}(\partial'\alpha_m \times \mathbf{D}^q)$ is pulled back by the flow of $\tilde{\nabla}$;

Second, in the tubular neighborhood T_{β_m}, the intersection of the hole with $E(\beta_m)$ is pulled back by the projection pr_{β_m};

Third, in the tubular neighborhood T_{α_m}, the intersection of the hole with $E(\alpha_m)$ is pulled back by the projection pr_{α_m}.

Clearly, through the pullbacks, the core of the hole remains diffeomorphic to $\mathbf{S}^{i-1} \times \mathbf{D}^{p-i}$; and the property (3) is preserved, since the vector field $\tilde{\nabla}$ and the projections pr_{β_m}, pr_{α_m} are projectable through $\bar{\pi}$.

The property (iii) of Theorem *A'* follows straightforwardly.

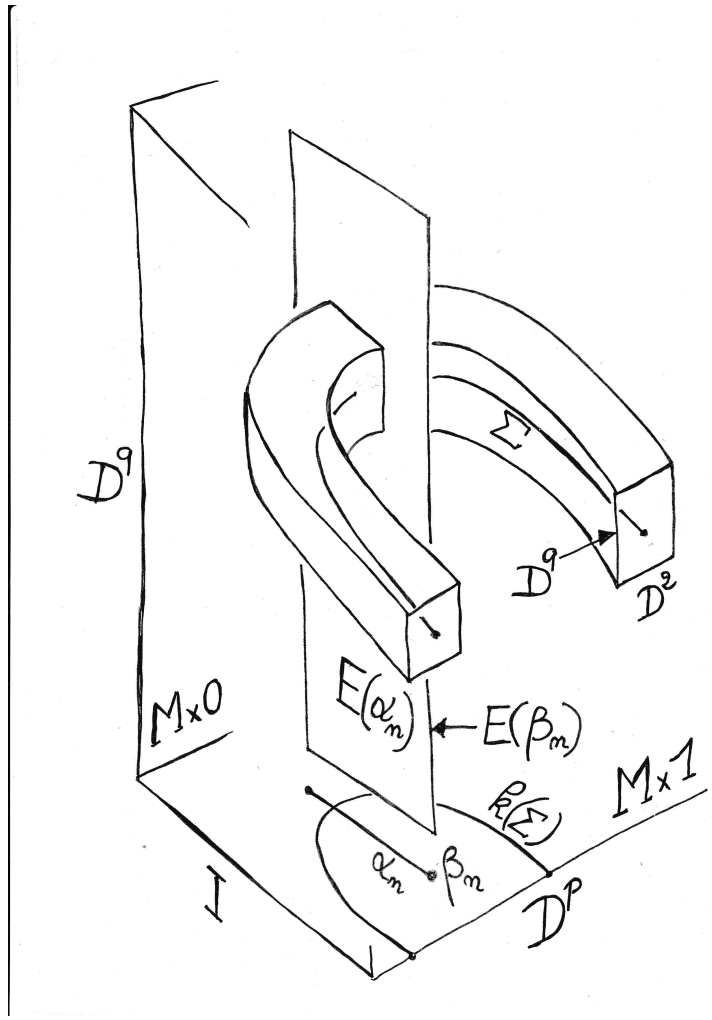

FIGURE 6. Schematic view on the propagation and projection of a hole. Beware that this low-dimensional drawing can be misleading in several ways: actually, there appears a hole while foliating $E(\alpha_n)$ only for $i := \dim(\beta_n) \geq 1$; in the topology of Σ, here $\mathbf{S}^{i-1}$ has been assimilated to one point; in $\mathbf{D}^p \times \mathbf{I}$, the submanifold $k(\sigma)$ is actually of codimension 2, not 1.

5. Proof of the Mather-Thurston Theorem as a corollary of A'

Given X, V, γ as in Theorem 1.8, recall that $p = \dim(V) \geq 0$ and $q = \dim(X) \geq 1$; to fix ideas, assume moreover that X is closed.

Let $\mathscr{F}$ be the slice foliation of $V \times X$ parallel to X; let $\bar{V} := V \times \mathbf{I}$; consider the canonical projections

$$\pi : V \times X \to V$$
$$\bar{\pi} : \bar{V} \times X \to \bar{V}$$
$$\mathrm{pr}_2 : V \times X \to X$$
$$\omega : \tau(V \times X) \to \mathrm{pr}_2^*(\tau X)$$

Choose a product of commutators:

$$\varphi = [\alpha_1, \beta_1] \dots [\alpha_g, \beta_g]$$

with $\alpha_1, \beta_1, \dots, \alpha_g, \beta_g \in \widetilde{\mathrm{Diff}}(\mathbf{D}^q)_0$ (in fact, every $\varphi \in \widetilde{\mathrm{Diff}}(\mathbf{D}^q)_0$ is of this form, but we don't need this perfectness result for which one can find references and a discussion in [23]), such that the image $\varphi_1 \in \mathrm{Diff}(\mathbf{D}^q)_0$ is not the identity.

By Theorem *A'*, we get on $\bar{V} \times X$ a $(\mathbf{D}^q, \varphi)$-holed Γ_q-structure $(\Sigma, h, \bar{\gamma})$ (recall Definition 3.3) such that:

I) The normal bundle of $(\Sigma, h, \bar{\gamma})$ is $\mathrm{pr}_2^*(\tau X)$;
II) $h(H_{\Sigma,\mathbf{D}^q})$ is disjoint from $\hat{V} \times X$, and $\bar{\gamma} = \mathrm{pr}_1^*(\gamma)$ on $\mathscr{O}p_{\bar{V}}(\hat{V}) \times X$;
III) $(\partial\Sigma, h|H_{\partial\Sigma,\mathbf{D}^q}, \bar{\gamma}|(V \times 1 \times X))$ is on $V \times 1 \times X$ a $(\mathbf{D}^q, \varphi)$-holed foliation quasi-complementary to $\mathscr{F}$ (recall Definition 3.4);
IV) The embedding h of $H_{\Sigma,\mathbf{D}^q} = \Sigma \times \mathbf{D}^2 \times \mathbf{D}^q$ into $\bar{V} \times X$ covers an immersion $k : \Sigma \times \mathbf{D}^2 \to \bar{V}$ whose restriction to each connected component is an embedding.

Consider first the simple case where k is a *global embedding* $\Sigma \times \mathbf{D}^2 \hookrightarrow \bar{V}$. In this case, we shall "fill the hole" by a suspension and hence obtain a genuine foliated bundle, at the price of modifying the base through a surgery performed along the projection of the hole.

To this end, let S_g be the compact orientable surface bounded by $\mathbf{S}^1$ and of genus g. Let $\mathscr{S}$ be the codimension-q foliation on $S_g \times \mathbf{D}^q$ that is the suspension of the representation $\pi_1(S_g) \to \widetilde{\mathrm{Diff}}(\mathbf{D}^q)_0$ mapping the canonical free basis to $\alpha_1, \beta_1, \dots, \alpha_g, \beta_g$. Obviously, $\mathscr{S}$ induces on $(\partial S_g) \times \mathbf{D}^q$ the suspension of φ. On the other hand, fix a smooth map $\alpha : S_g \to \mathbf{D}^2$ inducing the identity between the boundaries.

Do surgery on $\bar{V}$ by cutting $k(\Sigma \times \mathbf{D}^2)$ and pasting $\Sigma \times S_g$; let W be the resulting $(p+1)$-fold: an oriented cobordism rel. ∂V between V and an oriented compact p-fold V' obtained from V by cutting $k(\partial\Sigma \times \mathbf{D}^2)$ and pasting $\partial\Sigma \times S_g$. Consider the smooth map $a : W \to \bar{V}$ equal to $k \circ (\mathrm{id}_\Sigma \times \alpha)$ on $\Sigma \times S_g$ and to the identity on the complement; consider the smooth map

$$A := a \times \mathrm{id}_X : W \times X \to \bar{V} \times X$$

Define the Γ_q-structure $\hat{\gamma}$ on $W \times X$ as $(\mathrm{pr}_2 \times \mathrm{pr}_3)^*(\mathscr{S})$ on

$$A^{-1}(h(H_{\Sigma,\mathbf{D}^q})) \cong \Sigma \times S_g \times \mathbf{D}^q$$

and as $A^*(\bar{\gamma})$ on the complement. The conclusions of Theorem 1.8 are matched.

In the general case, the images of the different components of $\Sigma \times \mathbf{D}^2$ under k can intersect. Roughly speaking, we shall apply the preceding method with one connected component of Σ instead of the all of Σ, and thus be able to fill this component of the hole, initiating an inductive process; the number of connected components decreases by one at each step; at the end there is no hole any more and the proof of the Mather-Thurston theorem is complete. The only point that deserves some care is the behaviour of the other components of the hole under the surgery that fills one of them, since their projections in the base can intersect.

By induction, one has already an oriented cobordism W_ℓ between V and a p-fold V_ℓ rel. ∂V; and one has a $(\mathbf{D}^q, \varphi)$-holed Γ_q-structure $(\Sigma, h, \bar{\gamma})$ on $W_\ell \times X$ satisfying (I) through (IV) above but with W_ℓ instead of $\bar{V}$ and V_ℓ instead of $V \times 1$. The core Σ has $n - \ell$ connected components Σ_i $(1 \leq i \leq n - \ell)$. We have to build a similar situation where the hole has only $n - \ell - 1$ connected components.

Before making a surgery on W_ℓ along $k(\Sigma_{n-\ell} \times 0)$, we must take precautions and change h in order that the other components behave well under the surgery.

First, after a generic reparametrization of h (Tool 3.1.5), every $k(\Sigma_i \times 0)$ $(i \leq n - \ell - 1)$ is transverse to $k(\Sigma_{n-\ell} \times 0)$ in W_ℓ. Then,

$$Z_i := k|(\Sigma_i \times 0)^{-1}(k(\Sigma_{n-\ell} \times 0)) \subset \Sigma_i$$

is a submanifold of codimension 2 with trivial normal bundle.

Second, by a horizontal shrinking (Tool 3.1.3), we arrange that $k|(\Sigma_{n-\ell} \times y)$ is transverse to $k(\Sigma_i \times y')$ for every $1 \leq i \leq n - \ell - 1$, every $y \in \mathbf{D}^2$ and every $y' \in \mathbf{D}^2$; in particular $k|(\Sigma_i \times y')^{-1}(k(\Sigma_{n-\ell} \times y))$ is diffeomorphic with Z_i.

Then, do surgery on W_ℓ by cutting $k(\Sigma_{n-\ell} \times \mathbf{D}^2)$ and pasting $\Sigma_{n-\ell} \times S_g$; let $W_{\ell+1}$ be the resulting $(p+1)$-fold: an oriented cobordism rel. ∂V between V and an oriented compact p-fold $V_{\ell+1}$. Consider the degree-one map $a : W_{\ell+1} \to W_\ell$ equal to $k \circ (\mathrm{id}_{\Sigma_{n-\ell}} \times \alpha)$ on $\Sigma_{n-\ell} \times S_g$ and to the identity on the complement. Obviously, $a^{-1}(k(\Sigma_i \times \mathbf{D}^2))$ is diffeomorphic to $\Sigma_i' \times \mathbf{D}^2$, where $\Sigma_i' := a^{-1}(k(\Sigma_i \times 0))$ is obtained from Σ_i by cutting a small tubular neighborhood of Z_i and pasting $Z_i \times S_g$. In particular, Σ_i' is connected.

Consider the smooth map

$$A := a \times \mathrm{id}_X : W_{\ell+1} \times X \to W_\ell \times X$$

Clearly, the preimage under A of each hole component $h(H_{\Sigma_i})$ ($1 \leq i \leq n-\ell-1$) is also the image of an embedding $h'_i : H_{\Sigma'_i} \hookrightarrow W_{\ell+1} \times X$ covering an embedding $\Sigma'_i \times \mathbf{D}^2 \hookrightarrow W_{\ell+1}$. On $W_{\ell+1} \times X$, in the complement of the A-preimages of the holes, define the $\bar{\Gamma}_q$-structure $\bar{\gamma}'$ as $A^*(\bar{\gamma})$; extend it by $(\mathrm{pr}_2 \times \mathrm{pr}_3)^*(\mathscr{S})$ in

$$A^{-1}(h(H_{\Sigma_{n-\ell}})) \cong \Sigma_{n-\ell} \times S_g \times \mathbf{D}^q$$

Let Σ' (resp. h') be the disjoint sum of the manifolds Σ'_i (resp. maps h'_i), for $1 \leq i \leq n-\ell-1$. The triple $(\Sigma', h', \bar{\gamma}')$ is on $W_{\ell+1} \times X$ a $(\mathbf{D}^q, \varphi)$-holed Γ_q-structure which satisfies the properties (I) through (IV) above, but with $W_{\ell+1}$, $V_{\ell+1}$, Σ', h', $\bar{\gamma}'$ instead of $\bar{V}$, $V \times 1$, Σ, h, $\bar{\gamma}$.

References

[1] Atiyah, Michael Francis; Hirzebruch, Friedrich, *Vector bundles and homogeneous spaces*, Proc. Sympos. Pure Math., Vol. III, AMS, Providence, R.I. (1961) 7–38.

[2] C. Camacho, A. Lins Neto (translated by Sue E. Goodman), *Geometric theory of foliations,* Birkhäuser (Boston-Basel-Stuttgart 1985).

[3] A. Candel, L. Conlon, *Foliations I,* Amer. Math. Soc. Graduate studies in Math. 23, Providence (2000).

[4] Y. Eliashberg, N. Mishachev, *Wrinkling of smooth mappings III: Foliations of codimension greater than one,* Topol. Methods Nonlinear Anal. 11 n°2 (1998), 321-350.

[5] Y. Eliashberg, N. Mishachev, *Introduction to the h-principle*, G.S.M. 48, Amer. math. Soc., Providence (2002).

[6] Y. Eliashberg, S. Galatius, N. Mishachev, *Madsen-Weiss for geometrically minded topologists,* Geometry & Topology 15 (2011), 411–472.

[7] D. B. A. Epstein, *The simplicity of certain groups of homeomorphisms,* Compos. Math. 22 (1970), 165–173.

[8] D. B. Fuchs, *Quillenization and bordism,* (Russian) Funkcional. Anal. i Priložen. 8 (1974), no. 1, 36–42. English translation: Functional Analysis and its Applications (Springer 1974), 8:1, 31–36.

[9] M. Gromov, *Stable mappings of foliations into manifolds,* Izv. Akad. Nauk SSSR Ser. Mat. Volume 33, Issue 4 (1969), 707–734.

[10] A. Haefliger, *Structures feuilletées et cohomologie à valeurs dans un faisceau de groupoïdes*, Comment. Math. Helv. 32 (1958), 248–329.

[11] A. Haefliger, *Espaces universels pour les feuilletages,* Colloque de Topologie Différentielle (Mont Aigoual 1969), Université de Montpellier, 11–17.

[12] A. Haefliger, *Feuilletages sur les variétés ouvertes*, Topology 9 (1970), 183-194.

[13] A. Haefliger, *Homotopy and integrability,* in *Manifolds,* Amsterdam 1970, L.N.M. 197, Springer (1971), 133–175.

[14] F. Laudenbach, G. Meigniez, *Haefliger structures and symplectic/contact structures,* J. Ec. polytech. Math. 3 (2016), 1-29.
[15] J.N. Mather, *Integrability in codimension 1*, Comment. Math. Helv. 48 (1973), 195–233.
[16] J. Mather, *Loops and Foliations,* in A. Hattori ed., *Manifolds Tokyo 1973,* University of Tokyo Press (1975), 175–180.
[17] J. N. Mather, *On the Homology of Haefliger's classifying space,* C.I.M.E. Summer School (Varenna 1976), in V. Villani ed., *Differential Topology,* C.I.M.E. Summer Schools vol. 73 (Springer 2011), 71–116.
[18] D. McDuff, *Foliations and Monoids of Embeddings,* in *Geometric Topology,* Cantrell ed., Academic Press (1979), 429–444.
[19] D. McDuff, *The Homology of some Groups of Diffeomorphisms,* Comment. Math. Helvetici 55 (1980), 97–129.
[20] G. Meigniez, *Realizing compactly generated pseudo-groups of dimension one,* J. Math. Soc. Japan. 68, no. 4 (2016), 1747–1775.
[21] G. Meigniez, *Regularization and minimization of codimension-one Haefliger structures,* J. Differential Geom. 107, no. 1 (2017), 157–202.
[22] J. Milnor, *Foliations and foliated vector bundles,* M.I.T. notes (1970); published in *Collected Papers of John Milnor: IV. Homotopy, Homology and Manifolds,* American Mathematical Society (Providence 2009), 279–320.
[23] Y. Mitsumatsu, E. Vogt, *Thurston's h-Principle for 2-Dimensional Foliations of Codimension Greater than One,* in *Geometry, Dynamics and Foliations* (Tokyo 2013), T. Asuke, S. Matsumoto, Y. Mitsumatsu eds, *Mathematical Society of Japan* and World Scientific (2016).
[24] A. Phillips, *Smooth maps transverse to a foliation,* Bull. Amer. Math. Soc. 76 (1970), 792–797.
[25] G. Segal, *Classifying Spaces related to Foliations,* Topology 17 (1978), 367–382.
[26] W. Thurston, *The theory of foliations of codimension greater than one*, Commentarii Mathematici Helvetici 49 (1974), 214-231.
[27] W. Thurston, *Foliations and groups of diffeomorphisms,* Bull. Amer. Math. Soc. 80 (1974), 304–307.
[28] W. Thurston, *Existence of codimension-one foliations*, Annals of Math. 104 (1976), 249–268.
[29] T. Tsuboi, *On the foliated products of class C^1,* Annals of Math. 130 (1989), 227–271.

Université de Bretagne Sud
Laboratoire de Mathématiques de Bretagne Atlantique
LMBA UBS (UMR CNRS 6205)
B.P. 573
F-56019 VANNES CEDEX, France
Gael.Meigniez@univ-ubs.fr