HAL open science

WAVE FINITE ELEMENT METHOD FOR VIBRATION OF PERIODIC STRUCTURES SUBJECTED TO EXTERNAL LOADS

Tien Hoang, Denis Duhamel, Gilles Forêt

To cite this version:

Tien Hoang, Denis Duhamel, Gilles Forêt. WAVE FINITE ELEMENT METHOD FOR VIBRATION OF PERIODIC STRUCTURES SUBJECTED TO EXTERNAL LOADS. 6th European Conference on Computational Mechanics (ECCM 6), Jun 2018, Glasgow, United Kingdom. hal-02142446

HAL Id: hal-02142446

https://hal.science/hal-02142446v1

Submitted on 28 May 2019

HAL is a multi-disciplinary open access archive for the deposit and dissemination of scientific research documents, whether they are published or not. The documents may come from teaching and research institutions in France or abroad, or from public or private research centers.

L'archive ouverte pluridisciplinaire **HAL**, est destinée au dépôt et à la diffusion de documents scientifiques de niveau recherche, publiés ou non, émanant des établissements d'enseignement et de recherche français ou étrangers, des laboratoires publics ou privés.

6th European Conference on Computational Mechanics (ECCM 6)
7th European Conference on Computational Fluid Dynamics (ECFD 7)
1115 June 2018, Glasgow, UK

WAVE FINITE ELEMENT METHOD FOR VIBRATION OF PERIODIC STRUCTURES SUBJECTED TO EXTERNAL LOADS

T. HOANG[1], D. DUHAMEL[1] AND G. FORET[1]

[1] Laboratoire Navier, UMR 8205, Ecole des Ponts ParisTech, IFSTTAR, CNRS, UPE
Champs-sur-Marne, France
tien.hoang@enpc.fr, denis.duhamel@enpc.fr and gilles.foret@enpc.fr

Key words: Wave Finite Element, Vibration, Periodic, Waveguide, Computing Methods

Abstract. The wave finite element method (WFE) for the vibration of waveguides and periodic structures bases on the decomposition of vectors of degree of freedom (DOF) into left and right waves. This technique permits to reduce all DOF inside the periodic structure. However, this method cannot be applied easily if the periodic structure is subjected to complex or density loads. This article presents an extended WFE for any type of loads. Firstly, the dynamic equation is rewritten to separate the vectors of loads and DOF. Then, by using the same wave base as for the free-loaded structure, we can obtain a decomposition of DOF in this base with a new component which corresponds to the loads. Finally, this decomposition is applied to the classical approaches of WFE. For the dynamic stiffness matrix (DSM approach), it is shown that the external loads have no contribution to the global matrix but they lead to an equivalent load in the dynamic equation. Otherwise, the wave analysis (WA approach) is represented by a new component which is the wave amplitudes of the loads. Some computations on simple structures show the efficiency of the method.

1 BASIC FRAMEWORK

The wave finite element method has been developed to calculate the dynamic behavior of periodic structures and waveguides [1]. Recently, this technique has been used as a reduce model for a complex structure [2, 3]. However, this method can not be applied easily for periodic structures subjected to external loads and this is objective of this article.

We consider a periodic structure which contains N substructures as shown in Figure 1. By using the finite element method, the dynamic equation of a substructure can be written in matrix form $\tilde{\mathbf{D}}\mathbf{q} = \mathbf{F}$ with $\tilde{\mathbf{D}} = \mathbf{K} + j\omega\mathbf{C} - \omega^2\mathbf{M}$ is the dynamic stiffness matrix, and $\mathbf{q}$, $\mathbf{F}$ are the vectors of degrees of freedom and nodal loads. Then, we can

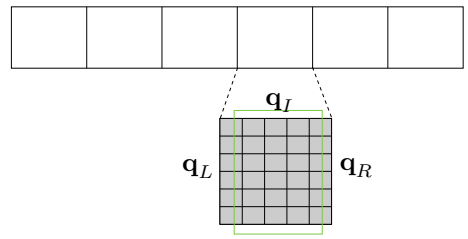

Figure 1: Structure with a periodic substructure

rewrite the dynamic equation to separate the boundaries and inner DOF as follows

$$\begin{bmatrix} \tilde{\mathbf{D}}_{II} & \tilde{\mathbf{D}}_{IL} & \tilde{\mathbf{D}}_{IR} \\ \tilde{\mathbf{D}}_{LI} & \tilde{\mathbf{D}}_{LL} & \tilde{\mathbf{D}}_{LR} \\ \tilde{\mathbf{D}}_{RI} & \tilde{\mathbf{D}}_{RL} & \tilde{\mathbf{D}}_{RR} \end{bmatrix} \begin{bmatrix} \mathbf{q}_I \\ \mathbf{q}_L \\ \mathbf{q}_R \end{bmatrix} = \begin{bmatrix} \mathbf{F}_I \\ \mathbf{F}_L \\ \mathbf{F}_R \end{bmatrix} \tag{1}$$

where L, R and I denote for the left, right boundaries and inner nodes of the substructure. Then, we can reduce the inner nodes $\mathbf{q}_I$ by rewriting the first row of equation (1) as follows

$$\mathbf{q}_I = \tilde{\mathbf{D}}_{II}^{-1} \left[\mathbf{F}_I - \tilde{\mathbf{D}}_{IL}\ \mathbf{q}_L - \tilde{\mathbf{D}}_{IR}\ \mathbf{q}_R \right] \tag{2}$$

Then, by substituting the aforementioned equation into the second and the third rows of equation (1) , we obtain

$$\begin{aligned} \tilde{\mathbf{D}}_{LI}\tilde{\mathbf{D}}_{II}^{-1} \left[\mathbf{F}_I - \tilde{\mathbf{D}}_{IL}\ \mathbf{q}_L - \tilde{\mathbf{D}}_{IR}\ \mathbf{q}_R \right] + \tilde{\mathbf{D}}_{LL}\ \mathbf{q}_L + \tilde{\mathbf{D}}_{LR}\ \mathbf{q}_R = \mathbf{F}_L \\ \tilde{\mathbf{D}}_{RI}\tilde{\mathbf{D}}_{II}^{-1} \left[\mathbf{F}_I - \tilde{\mathbf{D}}_{IL}\ \mathbf{q}_L - \tilde{\mathbf{D}}_{IR}\ \mathbf{q}_R \right] + \tilde{\mathbf{D}}_{RL}\ \mathbf{q}_L + \tilde{\mathbf{D}}_{RR}\ \mathbf{q}_R = \mathbf{F}_R \end{aligned} \tag{3}$$

In the orther way, we can rewrite

$$\begin{bmatrix} \mathbf{D}_{LI}\mathbf{F}_I \\ \mathbf{D}_{RI}\mathbf{F}_I \end{bmatrix} + \begin{bmatrix} \mathbf{D}_{LL} & \mathbf{D}_{LR} \\ \mathbf{D}_{RL} & \mathbf{D}_{RR} \end{bmatrix} \begin{bmatrix} \mathbf{q}_L \\ \mathbf{q}_R \end{bmatrix} = \begin{bmatrix} \mathbf{F}_L \\ \mathbf{F}_R \end{bmatrix} \tag{4}$$

where

$$\begin{aligned} \mathbf{D}_{LL} &= \tilde{\mathbf{D}}_{LL} - \tilde{\mathbf{D}}_{LI}\tilde{\mathbf{D}}_{II}^{-1}\tilde{\mathbf{D}}_{IL} & \mathbf{D}_{LR} &= \tilde{\mathbf{D}}_{LR} - \tilde{\mathbf{D}}_{LI}\tilde{\mathbf{D}}_{II}^{-1}\tilde{\mathbf{D}}_{IR} \\ \mathbf{D}_{RL} &= \tilde{\mathbf{D}}_{RL} - \tilde{\mathbf{D}}_{RI}\tilde{\mathbf{D}}_{II}^{-1}\tilde{\mathbf{D}}_{IL} & \mathbf{D}_{RR} &= \tilde{\mathbf{D}}_{RR} - \tilde{\mathbf{D}}_{RI}\tilde{\mathbf{D}}_{II}^{-1}\tilde{\mathbf{D}}_{IR} \\ \mathbf{D}_{LI} &= \tilde{\mathbf{D}}_{LI}\tilde{\mathbf{D}}_{II}^{-1} & \mathbf{D}_{RI} &= \tilde{\mathbf{D}}_{RI}\tilde{\mathbf{D}}_{II}^{-1} \end{aligned} \tag{5}$$

We see that equation (4) presents a relation between the DOF and nodal loads and at the left and right boundaries of a substructure, it contains a term of $\mathbf{F}_I$ which is zero when the substructure is free-loaded. When the structure is periodic, this equation holds for all substructure. For the two consecutive connected substructures (n) and $(n+1)$, we have

$$\begin{aligned} \mathbf{q}_R^{(n)} &= \mathbf{q}_L^{(n+1)} \\ \mathbf{F}_R^{(n)} + \mathbf{F}_L^{(n+1)} &= \mathbf{F}_B^{(n)} \end{aligned} \tag{6}$$

where $\mathbf{F}_B^{(n)}$ is the external nodal load at the right boundary R of the cell (n). By combining equations (5) and (7), we obtain

$$\begin{bmatrix} \mathbf{q}_L^{(n+1)} \\ -\mathbf{F}_L^{(n+1)} \end{bmatrix} = \begin{bmatrix} \mathbf{D}_{qI}\mathbf{F}_I^{(n)} \\ \mathbf{D}_{fI}\mathbf{F}_I^{(n)} - \mathbf{F}_B^{(n)} \end{bmatrix} + \mathbf{S} \begin{bmatrix} \mathbf{q}_L^{(n)} \\ -\mathbf{F}_L^{(n)} \end{bmatrix} \tag{7}$$

where

$$\mathbf{S} = \begin{bmatrix} -\mathbf{D}_{LR}^{-1}\mathbf{D}_{LL} & -\mathbf{D}_{LR}^{-1} \\ \mathbf{D}_{RL} - \mathbf{D}_{RR}\mathbf{D}_{LR}^{-1}\mathbf{D}_{LL} & -\mathbf{D}_{RR}\mathbf{D}_{LR}^{-1} \end{bmatrix}, \begin{bmatrix} \mathbf{D}_{qI} \\ \mathbf{D}_{fI} \end{bmatrix} = \begin{bmatrix} -\mathbf{D}_{LR}^{-1}\mathbf{D}_{LI} \\ \mathbf{D}_{RI} - \mathbf{D}_{RR}\mathbf{D}_{LR}^{-1}\mathbf{D}_{LI} \end{bmatrix} \tag{8}$$

We can rewrite equation (7) as follows

$$\mathbf{u}^{(n+1)} = \mathbf{S}\mathbf{u}^{(n)} + \mathbf{b}^{(n)} \tag{9}$$

where

$$\mathbf{u}^{(n)} = \begin{bmatrix} \mathbf{q}_L^{(n)} \\ -\mathbf{F}_L^{(n)} \end{bmatrix}, \quad \mathbf{b}^{(n)} = \begin{bmatrix} \mathbf{D}_{qI}\mathbf{F}_I^{(n)} \\ \mathbf{D}_{fI}\mathbf{F}_I^{(n)} - \mathbf{F}_B^{(n)} \end{bmatrix} \tag{10}$$

Equation (9) presents a relation between the substructure (n) and its next substructure $(n+1)$. Here $\mathbf{b}^{(n)}$ presents the external loads on the substructures (n) (when the substructure is free load, $\mathbf{b}^{(n)} = 0$). Equation (9) presents also a relation of a geometric series with regard to (n). Therefore, for a structure including a series of N periodic substructures, we have

$$\mathbf{u}^{(n)} = \mathbf{S}^{n-1}\mathbf{u}^{(1)} + \sum_{k=1}^{n-1} \mathbf{S}^{n-k-1}\mathbf{b}^{(k)} \tag{11}$$

$$\mathbf{u}^{(N+1)} = \mathbf{S}^{N-n+1}\mathbf{u}^{(n)} + \sum_{k=n}^{N} \mathbf{S}^{N-k}\mathbf{b}^{(k)} \tag{12}$$

The aforementioned equations are the relation between the substructure (n) and the first and the last substructures. Next, we will use develop these expression in the wave base decomposition.

Remark: $\mathbf{F}_B^{(n)}$ in equation (6) is the external nodal load at the right boundary of the substructure. Therefore, this load is considered applying in the right end of the periodic structure but it is not included on the left end. This will explain the different expressions for the left and right boundary in the DSM and WA approches presented in section 3.

2 WAVE DECOMPOSITION

We are looking for wavemodes $\{(\mu_j, \phi_j)\}_j$ which are the eigenvalues and eigenvectors of the matrix $\mathbf{S}$ such that

$$\mathbf{S}\phi_j = \mu_j\phi_j \tag{13}$$

Due to the symplectic nature of the matrix $\mathbf{S}$ [1], we consider the eigenproblem of the transformation $\mathbf{S}+\mathbf{S}^{-1}$ which yields the eigenvalues of the form $\lambda_j = \mu_j + 1/\mu_j$ given by

$$\left[\left(\mathbf{N}'\mathbf{J}\mathbf{L}'^T + \mathbf{L}'\mathbf{J}\mathbf{N}'^T\right) - \lambda_j \mathbf{L}'\mathbf{J}\mathbf{L}'^T\right]\mathbf{z}_j = 0 \tag{14}$$

where

$$\mathbf{L}' = \begin{bmatrix} \mathbf{0} & \mathbf{I}_n \\ \mathbf{D}_{LR} & \mathbf{0} \end{bmatrix}, \quad \mathbf{N}' = \begin{bmatrix} \mathbf{D}_{RL} & \mathbf{0} \\ -(\mathbf{D}_{LL}+\mathbf{D}_{RR}) & -\mathbf{I}_n \end{bmatrix}, \quad \mathbf{J} = \begin{bmatrix} \mathbf{0} & \mathbf{I}_n \\ -\mathbf{I}_n & \mathbf{0} \end{bmatrix} \tag{15}$$

Then, each pair of eigenvalues $(\mu_j, \mu_j^\star)$ can be computed analytically by

$$x^2 - \lambda_j x + 1 = 0 \tag{16}$$

Also, the eigenvectors corresponding to these eigenvalues are computed by the closed-form expressions

$$\phi_j = \begin{bmatrix} \mathbf{I}_n & \mathbf{0} \\ \mathbf{D}_{RR} & \mathbf{I}_n \end{bmatrix} \mathbf{w}'_j, \quad \phi_j^\star = \begin{bmatrix} \mathbf{I}_n & \mathbf{0} \\ \mathbf{D}_{RR} & \mathbf{I}_n \end{bmatrix} \mathbf{w}'^\star_j \tag{17}$$

where $\mathbf{w}'_j = \mathbf{J}(\mathbf{L}'^T - \mu_j^\star \mathbf{N}'^T)\mathbf{z}_j$ and $\mathbf{w}'^\star_j = \mathbf{J}(\mathbf{L}'^T - \mu_j \mathbf{N}'^T)\mathbf{z}_j$.

If we note $\mathbf{\Phi} = [\phi_1 \cdots \phi_n]$ and $\mathbf{\Phi}^\star = [\phi_1^\star \cdots \phi_n^\star]$, we have a wave base $\{\mathbf{\Phi}, \mathbf{\Phi}^\star\}$ of the transformation $\mathbf{S}$. We can also separate the components of the wave base corresponding to $\mathbf{q}$ and $\mathbf{F}$ as follows

$$\mathbf{\Phi} = \begin{bmatrix} \mathbf{\Phi}_q \\ \mathbf{\Phi}_F \end{bmatrix} \quad \mathbf{\Phi}^\star = \begin{bmatrix} \mathbf{\Phi}_q^\star \\ \mathbf{\Phi}_F^\star \end{bmatrix} \tag{18}$$

We can decompose each vector of equation (9) in this wave base as follows

$$\begin{aligned} \mathbf{u}^{(n)} &= \mathbf{\Phi}\mathbf{Q}^{(n)} + \mathbf{\Phi}^\star \mathbf{Q}^{\star(n)} \\ \mathbf{b}^{(n)} &= \mathbf{\Phi}\mathbf{Q}_B^{(n)} + \mathbf{\Phi}^\star \mathbf{Q}_B^{\star(n)} \end{aligned} \tag{19}$$

Then, by replacing the aforementioned equation into equations (11) and (12), we obtain

$$\begin{aligned} \mathbf{Q}^{(n)} &= \boldsymbol{\mu}^{n-1}\mathbf{Q} + \sum_{k=1}^{n-1} \boldsymbol{\mu}^{n-k-1}\mathbf{Q}_B^{(k)} \\ \mathbf{Q}^{\star(n)} &= \boldsymbol{\mu}^{N+1-n}\mathbf{Q}^\star - \sum_{k=n}^{N} \boldsymbol{\mu}^{k+1-n}\mathbf{Q}_B^{\star(k)} \end{aligned} \tag{20}$$

We see that the DOF of a substructure are represented by the two wave amplitudes $\mathbf{Q}^{(n)}$ and $\mathbf{Q}^{\star(n)}$. These amplitudes depend on the wave amplitudes of the first and the last substructures ($\mathbf{Q}$ and $\mathbf{Q}^\star$) and the wave amplitudes of the external loads on the middle substructures $\mathbf{Q}_B^{(k)}$ and $\mathbf{Q}_B^{\star(k)}$, which are calculated from equation (19).

$$\mathbf{Q}_B^{(n)} = \mathbf{\Phi}^{\star T}\mathbf{J}\mathbf{b}^{(n)}, \quad \mathbf{Q}_B^{\star(n)} = \mathbf{\Phi}^T\mathbf{J}\mathbf{b}^{(n)} \tag{21}$$

By substituting equation (10) into the aforementioned equation, we obtain

$$\begin{aligned}\mathbf{\Phi}^{\star T}\mathbf{J}\mathbf{b}^{(n)} &= \left(\mathbf{\Phi}_q^{\star T}\mathbf{D}_{fI} - \mathbf{\Phi}_F^{\star T}\mathbf{D}_{qI}\right)\mathbf{F}_I^{(k)} - \mathbf{\Phi}_q^{\star T}\mathbf{F}_B^{(k)}\\ \mathbf{\Phi}^{T}\mathbf{J}\mathbf{b}^{(n)} &= \left(\mathbf{\Phi}_q^{T}\mathbf{D}_{fI} - \mathbf{\Phi}_F^{T}\mathbf{D}_{qI}\right)\mathbf{F}_I^{(k)} - \mathbf{\Phi}_q^{T}\mathbf{F}_B^{(k)}\end{aligned} \tag{22}$$

In addition, we have the relation between the components of the wave base as follows (see [3])

$$\begin{aligned}\mathbf{\Phi}_F &= \mathbf{D}_{RR}\mathbf{\Phi}_q + \mathbf{D}_{RL}\mathbf{\Phi}_q\boldsymbol{\mu}^\star = -\left(\mathbf{D}_{LL}\mathbf{\Phi}_q + \mathbf{D}_{LR}\mathbf{\Phi}_q\boldsymbol{\mu}\right)\\ \mathbf{\Phi}_F^\star &= \mathbf{D}_{RR}\mathbf{\Phi}_q^\star + \mathbf{D}_{RL}\mathbf{\Phi}_q^\star\boldsymbol{\mu} = -\left(\mathbf{D}_{LL}\mathbf{\Phi}_q^\star + \mathbf{D}_{LR}\mathbf{\Phi}_q^\star\boldsymbol{\mu}^\star\right)\end{aligned} \tag{23}$$

By substituting equations (8) and (23) into equation (22), we obtain

$$\begin{aligned}\mathbf{Q}_B^{(k)} &= \left(\boldsymbol{\mu}\mathbf{\Phi}_q^{\star T}\mathbf{D}_{LI} + \mathbf{\Phi}_q^{\star T}\mathbf{D}_{RI}\right)\mathbf{F}_I^{(k)} - \mathbf{\Phi}_q^{\star T}\mathbf{F}_B^{(k)}\\ \mathbf{Q}_B^{\star(k)} &= \left(\boldsymbol{\mu}^\star\mathbf{\Phi}_q^{T}\mathbf{D}_{LI} + \mathbf{\Phi}_q^{T}\mathbf{D}_{RI}\right)\mathbf{F}_I^{(k)} - \mathbf{\Phi}_q^{T}\mathbf{F}_B^{(k)}\end{aligned} \tag{24}$$

Remark: In general, the wave base is not normalized automatically after calcul the eigenproblem in equation (14). The ill-conditioned matrix $\mathbf{S}$ can influence to the orthogonality of the wave base. We can resolve this problem by considering the weighting matrix as follows

$$\begin{aligned}\mathbf{\Psi} &= \mathbf{\Phi}^{\star T}\mathbf{J}\mathbf{\Phi} = \mathbf{\Phi}_q^{\star T}\mathbf{\Phi}_F - \mathbf{\Phi}_F^{\star T}\mathbf{\Phi}_q\\ \mathbf{\Psi}^\star &= \mathbf{\Phi}^{T}\mathbf{J}\mathbf{\Phi}^\star = \mathbf{\Phi}_q^{T}\mathbf{\Phi}_F^\star - \mathbf{\Phi}_F^{T}\mathbf{\Phi}_q^\star\end{aligned} \tag{25}$$

It is important to remark that

$$\mathbf{\Psi}^\star = -\mathbf{\Psi}^T \tag{26}$$

Using this weighting matrix lead to modify the wave amplitude of the external loads as follows:

$$\mathbf{\Psi}\mathbf{Q}_B^{(n)} = \mathbf{\Phi}^{\star T}\mathbf{J}\mathbf{b}^{(n)}, \quad \mathbf{\Psi}^\star\mathbf{Q}_B^{\star(n)} = \mathbf{\Phi}^{T}\mathbf{J}\mathbf{b}^{(n)} \tag{27}$$

3 ANALYSIS OF A COMPLETE STRUCTURE

3.1 DSM approach

The DSM approach is to establish the link between the DOFs and nodal loads of the left and right ends of the periodic structure which are components of $\mathbf{u}^{(1)}$ and $\mathbf{u}^{(N+1)}$. For the first and the last substructure, we obtain the following results from equations (19) and (20)

$$\begin{aligned}\mathbf{u}^{(1)} &= \mathbf{\Phi}\mathbf{Q} + \mathbf{\Phi}^\star\boldsymbol{\mu}^N\mathbf{Q}^\star - \mathbf{\Phi}^\star\sum_{k=1}^{N}\boldsymbol{\mu}^k\mathbf{Q}_B^{\star(k)}\\ \mathbf{u}^{(N+1)} &= \mathbf{\Phi}\boldsymbol{\mu}^N\mathbf{Q} + \mathbf{\Phi}^\star\mathbf{Q}^\star + \mathbf{\Phi}\sum_{k=1}^{N}\boldsymbol{\mu}^{N-k}\mathbf{Q}_B^{(k)}\end{aligned} \tag{28}$$

The aforementioned equation can lead to the following result (see Appendix A)

$$\begin{bmatrix}\mathbf{F}_L^{(1)}\\ \mathbf{F}_R^{(N+1)}\end{bmatrix} = \mathbf{D}_T\begin{bmatrix}\mathbf{q}_L^{(1)}\\ \mathbf{q}_R^{(N+1)}\end{bmatrix} + \mathbf{F}_T \tag{29}$$

where $\mathbf{D}_T, \mathbf{F}_T$ are the equivalent dynamic stiffness matrix and the external loads applied on the structure which are calculated by

$$\begin{aligned}\mathbf{D}_T = &\begin{bmatrix} \mathbf{D}_{LL} & \mathbf{0} \\ \mathbf{0} & \mathbf{D}_{RR} \end{bmatrix} + \begin{bmatrix} \mathbf{\Phi}_q^{\star -T}\boldsymbol{\mu}^N\mathbf{\Phi}_q^{\star T} & \mathbf{I} \\ \mathbf{I} & \mathbf{\Phi}_q^{-T}\boldsymbol{\mu}^N\mathbf{\Phi}_q^{T} \end{bmatrix}^{-1} \times \\ &\begin{bmatrix} \mathbf{\Phi}_q^{\star -T}\boldsymbol{\mu}^{N-1}\mathbf{\Phi}_q^{\star T} & \mathbf{\Phi}_q^{\star -T}\boldsymbol{\mu}\mathbf{\Phi}_q^{\star T} \\ \mathbf{\Phi}_q^{-T}\boldsymbol{\mu}\mathbf{\Phi}_q^{T} & \mathbf{\Phi}_q^{-T}\boldsymbol{\mu}^{N-1}\mathbf{\Phi}_q^{T} \end{bmatrix} \begin{bmatrix} \mathbf{D}_{LR} & \mathbf{0} \\ \mathbf{0} & \mathbf{D}_{RL} \end{bmatrix}\end{aligned} \tag{30}$$

with $[\cdot]^{-T}$ denotes for the inverse of the transpose matrix, and

$$\begin{aligned}\mathbf{F}_T = &\begin{bmatrix} \mathbf{\Phi}_q^{\star -T}\boldsymbol{\mu}^N\mathbf{\Phi}_q^{\star T} & \mathbf{I} \\ \mathbf{I} & \mathbf{\Phi}_q^{-T}\boldsymbol{\mu}^N\mathbf{\Phi}_q^{T} \end{bmatrix}^{-1} \times \\ &\sum_{k=1}^{N} \begin{bmatrix} \mathbf{\Phi}_q^{\star -T}\boldsymbol{\mu}^{N-k-1}\mathbf{\Phi}_q^{\star T} & \mathbf{\Phi}_q^{\star -T}\boldsymbol{\mu}^{N-k}\mathbf{\Phi}_q^{\star T} \\ \mathbf{\Phi}_q^{-T}\boldsymbol{\mu}^{k+1}\mathbf{\Phi}_q^{T} & \mathbf{\Phi}_q^{-T}\boldsymbol{\mu}^{k}\mathbf{\Phi}_q^{T} \end{bmatrix} \begin{bmatrix} \mathbf{D}_{LI}\mathbf{F}_I^{(k)} \\ \mathbf{D}_{RI}\mathbf{F}_I^{(k)} + \mathbf{F}_B^{(k)} \end{bmatrix}\end{aligned} \tag{31}$$

Equation (29) present the relation between the DOF and the loads of the periodic structure. When $\mathbf{F}_T = 0$ (which is deduced by $\mathbf{F}_I^{(k)} = \mathbf{F}_B^{(k)} = 0$), we obtain the same relation for the free loaded structure which has been studied in different publications [2]. We can combine this relation with the DSM of the rest of the structure to gel the reduced DSM of the hold structure.

3.2 WA approach

The aim of the WA approach is to calculate the response via the wave amplitudes $\{\mathbf{Q}, \mathbf{Q}^\star\}$ by using the boundary conditions at the left and right ends of the structures. By combining equation (19) and (20), we obtain

$$\begin{aligned}\mathbf{q}^{(n)} &= \mathbf{\Phi}_q\boldsymbol{\mu}^{n-1}\mathbf{Q} + \mathbf{\Phi}_q^\star\boldsymbol{\mu}^{N+1-n}\mathbf{Q}^\star + \mathbf{\Phi}_q\sum_{k=1}^{n-1}\boldsymbol{\mu}^{n-k-1}\mathbf{Q}_B^{(k)} - \mathbf{\Phi}_q^\star\sum_{k=n}^{N}\boldsymbol{\mu}^{k+1-n}\mathbf{Q}_B^{\star(k)} \\ \pm\mathbf{F}^{(n)} &= \mathbf{\Phi}_F\boldsymbol{\mu}^{n-1}\mathbf{Q} + \mathbf{\Phi}_F^\star\boldsymbol{\mu}^{N+1-n}\mathbf{Q}^\star + \mathbf{\Phi}_F\sum_{k=1}^{n-1}\boldsymbol{\mu}^{n-k-1}\mathbf{Q}_B^{(k)} - \mathbf{\Phi}_F^\star\sum_{k=n}^{N}\boldsymbol{\mu}^{k+1-n}\mathbf{Q}_B^{\star(k)}\end{aligned} \tag{32}$$

From the dynamic stiffness matrix of the substructures at the left and right ends of the periodic structure, we can write

$$-\mathbf{F}_L^{(1)} = \mathbb{D}\mathbf{q}_L^{(1)} + \mathbb{D}_q\mathbf{q}_0 + \mathbb{D}_F\mathbf{F}_0 - \mathbf{F}_B^{(0)} \tag{33}$$

where $\mathbb{D}, \mathbb{D}_q, \mathbb{D}_F$ are calculated from the dynamic equation of the first substructure (see [2]) and $\mathbf{F}_B^{(0)}$ is the external load on the left end of the periodic structure. By using the wave decomposition in equation (32), we obtain

$$\begin{aligned}\mathbf{q}^{(1)} &= \mathbf{\Phi}_q\mathbf{Q} + \mathbf{\Phi}_q^\star\boldsymbol{\mu}^N\mathbf{Q}^\star - \sum_{k=1}^{N}\mathbf{\Phi}_q^\star\boldsymbol{\mu}^k\mathbf{Q}_B^{\star(k)} \\ -\mathbf{F}_L^{(1)} &= \mathbf{\Phi}_F\mathbf{Q} + \mathbf{\Phi}_F^\star\boldsymbol{\mu}^N\mathbf{Q}^\star - \sum_{k=1}^{N}\mathbf{\Phi}_F^\star\boldsymbol{\mu}^k\mathbf{Q}_B^{\star(k)}\end{aligned} \tag{34}$$

Then, by substituting the aforementioned equations into equation (33), we have

$$\left(\mathbf{\Phi}_F - \mathbb{D}\mathbf{\Phi}_q\right)\mathbf{Q} = \left(\mathbb{D}\mathbf{\Phi}_q^\star - \mathbf{\Phi}_F^\star\right)\left(\boldsymbol{\mu}^N\mathbf{Q}^\star - \sum_{k=1}^{N}\mathbf{\Phi}_q^\star\boldsymbol{\mu}^k\mathbf{Q}_B^{\star(k)}\right) + \mathbb{D}_q\mathbf{q}_0 + \mathbb{D}_F\mathbf{F}_0 \tag{35}$$

with $\mathbf{Q}_B^{(k)}, \mathbf{Q}_B^{\star(k)}$ are calculated by equation (24). In the similar way, for the ending substructure, we get

$$-\mathbf{F}_R^{(N+1)} = \mathbb{D}^\star\mathbf{q}_R^{(N+1)} + \mathbb{D}_q^\star\mathbf{q}_0^\star + \mathbb{D}_F^\star\mathbf{F}_0^\star \tag{36}$$

where $\mathbb{D}^\star, \mathbb{D}_q^\star, \mathbb{D}_F^\star$ are calculated from the dynamic equation of the last substructure. Then, we obtain the similar result

$$\left(\mathbf{\Phi}_F - \mathbb{D}\mathbf{\Phi}_q\right)\mathbf{Q} = \left(\mathbb{D}\mathbf{\Phi}_q^\star - \mathbf{\Phi}_F^\star\right)\left(\boldsymbol{\mu}^N\mathbf{Q}^\star - \sum_{k=1}^{N}\mathbf{\Phi}_q^\star\boldsymbol{\mu}^k\mathbf{Q}_B^{\star(k)}\right) + \mathbb{D}_q\mathbf{q}_0 + \mathbb{D}_F\mathbf{F}_0 \tag{37}$$

By combining equations (35) and (37), we obtain

$$\mathbf{Q} = \mathbb{C}\left[\boldsymbol{\mu}^N\mathbf{Q}^\star - \sum_{k=1}^{N}\boldsymbol{\mu}^k\mathbf{Q}_B^{\star(k)}\right] + \mathbb{F}, \tag{38}$$

$$\mathbf{Q}^\star = \mathbb{C}^\star\left[\boldsymbol{\mu}^N\mathbf{Q} + \sum_{k=1}^{N}\boldsymbol{\mu}^{N-k}\mathbf{Q}_B^{(k)}\right] + \mathbb{F}^\star \tag{39}$$

where

$$\mathbb{C} = -\left[\mathbb{D}\mathbf{\Phi}_q - \mathbf{\Phi}_F\right]^{-1}\left[\mathbb{D}\mathbf{\Phi}_q^\star - \mathbf{\Phi}_F^\star\right], \quad \mathbb{C}^\star = -\left[\mathbb{D}^\star\mathbf{\Phi}_q^\star + \mathbf{\Phi}_F^\star\right]^{-1}\left[\mathbb{D}^\star\mathbf{\Phi}_q + \mathbf{\Phi}_F\right],$$
$$\mathbb{F} = -\left[\mathbb{D}\mathbf{\Phi}_q - \mathbf{\Phi}_F\right]^{-1}\left[\mathbb{D}_q\mathbf{q}_0 + \mathbb{D}_F\mathbf{F}_0\right], \quad \mathbb{F}^\star = -\left[\mathbb{D}^\star\mathbf{\Phi}_q + \mathbf{\Phi}_F\right]^{-1}\left[\mathbb{D}_q^\star\mathbf{q}_0^\star + \mathbb{D}_F^\star\mathbf{F}_0^\star\right]$$

By combining equations (38) and (39), we obtain

$$AQ = F \tag{40}$$

where $Q = \left[\mathbf{Q}^T\ \mathbf{Q}^{\star T}\right]^T$ and

$$A = \begin{bmatrix} \mathbf{I}_n & -\mathbb{C}\boldsymbol{\mu}^N \\ -\mathbb{C}^\star\boldsymbol{\mu}^N & \mathbf{I}_n \end{bmatrix}, \quad F = \begin{bmatrix} \mathbb{F} - \mathbb{C}\sum_{k=1}^{N}\boldsymbol{\mu}^k\mathbf{Q}_B^{\star(k)} \\ \mathbb{F}^\star + \mathbb{C}^\star\sum_{k=1}^{N}\boldsymbol{\mu}^{N-k}\mathbf{Q}_B^{(k)} \end{bmatrix} \tag{41}$$

Equation (40) permits to calculate the wave amplitudes $\{\mathbf{Q}, \mathbf{Q}^\star\}$ and then the response is calculated by equation (32).

4 EXAMPLES

Let's consider a beam of width $a = 0,1$m, thickness of $b = 0.01$m and length $L = 2$m. The material parameter is given by the Young modulus of 30GPa and the mass density of 2200kg/m^3. The beam is fixed at the left boundary and it is subjected to a pressure p

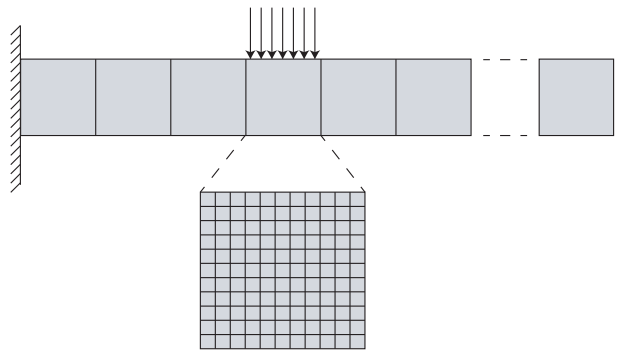

Figure 2: Fixed-free beam subjected to dynamic loads

in an interval between 0.3 and 0.4m as show in Figure 2. In this structure, the boundary condition is the following

$$\mathbf{q}^{(1)} = 0, \quad \mathbf{F}^{(N+1)} = 0 \tag{42}$$

We can use the DMS or WA approaches presented in section 3 by excluding the first and the last substructures. However, we can also include them to the wave analysis by substituting the boundary condition into equation (32) and obtain

$$\begin{aligned} \mathbf{\Phi}_q \mathbf{Q} + \mathbf{\Phi}_q^\star \boldsymbol{\mu}^N \mathbf{Q}^\star - \mathbf{\Phi}_q^\star \sum_{k=1}^{N} \boldsymbol{\mu}^k \mathbf{Q}_B^{\star(k)} = 0 \\ \mathbf{\Phi}_F \boldsymbol{\mu}^N \mathbf{Q} + \mathbf{\Phi}_F^\star \mathbf{Q}^\star + \mathbf{\Phi}_F \sum_{k=1}^{N} \boldsymbol{\mu}^{N-k} \mathbf{Q}_B^{(k)} = 0 \end{aligned} \tag{43}$$

Then, we can rewrite to obtain equation (40) with

$$A = \begin{bmatrix} \mathbf{I}_n & \mathbf{\Phi}_q^{-1} \mathbf{\Phi}_q^\star \boldsymbol{\mu}^N \\ \mathbf{\Phi}_F^{\star -1} \mathbf{\Phi}_F \boldsymbol{\mu}^N & \mathbf{I}_n \end{bmatrix}, \quad F = \begin{bmatrix} \mathbf{\Phi}_q^{-1} \mathbf{\Phi}_q^\star \sum_{k=1}^{N} \boldsymbol{\mu}^k \mathbf{Q}_B^{\star(k)} \\ -\mathbf{\Phi}_F^{\star -1} \mathbf{\Phi}_F \sum_{k=1}^{N} \boldsymbol{\mu}^{N-k} \mathbf{Q}_B^{(k)} \end{bmatrix} \tag{44}$$

The beam is considered of 20 substructures which are squares of dimension $a = 0.1$m and the same thickness. With the external load at the third substructure, we have $\mathbf{Q}_B^{(k)} = \mathbf{Q}_B^{\star(k)} = 0$, $\forall k \neq 4$. By using the finite element method, we obtain the DMS of the substructure with the mesh of 10x10 elements. Figure 3 show that the WFE has the same quality of the FEM. Moreover, the calculation time for WFE is 4.08s while 58.22s for FEM, equivalent to 93% of time reduction.

We take another example of a pipeline under pressure as shown in Figure 4. The pipeline is a cylindre of radius 1m and thickness mmm, made of steel with Young modulus 210GPa and Poisson coefficient of 0.3. The cylindre has two fixed ends and it is subjected to a dynamic pressure. Figure 5 presents an accurate results between the finite element method and the wave finite element method. The calculation time is reduced from 1277,7s with FEM to 332,8s with WFE, that means a reduction of 76% of calculation time.

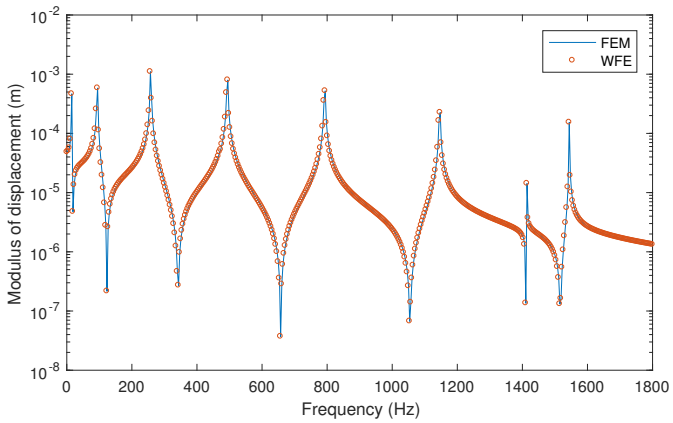

Figure 3: Response of the fixed-free beam

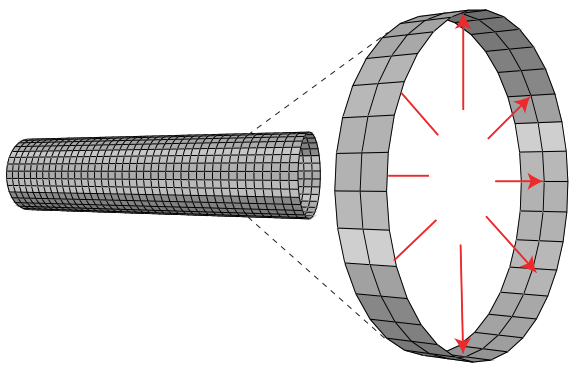

Figure 4: Fixed-fixed pipeline subjected to dynamic pressures

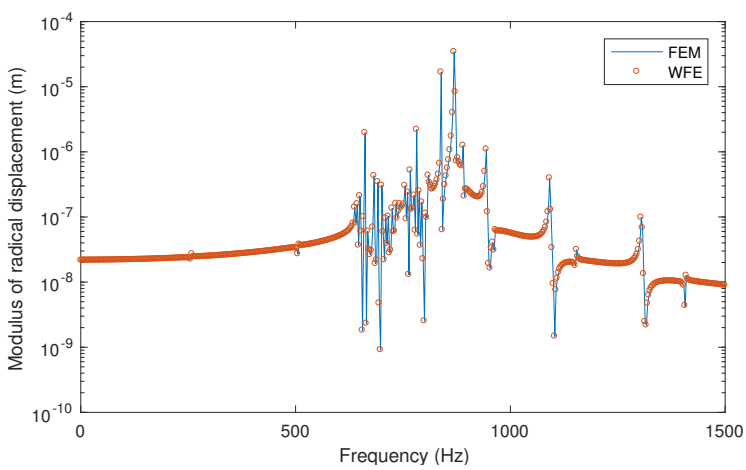

Figure 5: Response of the pipeline

5 CONCLUSION

This article presents a new development of WFE for the periodic structure subjected to external loads. It is significant because it open more application domain for WFE. The numerical application once again conclure the efficience of WFE in term of calculation time in comparing with classical FEM.

ACKNOWLEDGMENTS

This work is supported by a cooperation with Eurotunnel Group.

REFERENCES

[1] Zhong W.X and Willians F. W. *On the direct solution of wave propagation for repetitive structures*, J Sound Vib. (1995), **181**(3):485–501.

[2] Duhamel D., Mace B.R., Brennan M.J. *Finite element analysis of the vibrations of waveguides and periodic structures*. J Sound Vib. (2006), **294**(1–2):205–20.

[3] Mencik J-M, Duhamel D. *A wave finite element-based approach for the modeling of periodic structures with local perturbations*. Finite Elem Anal Des (2016) **121**:40–51.

[4] Mencik JM, Duhamel D. *A wave-based model reduction technique for the description of the dynamic behavior of periodic structures involving arbitrary-shaped substructures and large-sized finite element models*. Finite Elem Anal Des (2015) **101**:1–14.

A CALCULATION OF DMS APPROACHE

By using the othogonality of the wave base, we obtain the following result from equation (28)

$$\begin{aligned}\mathbf{\Phi}^{*T}\mathbf{J}\mathbf{u}^{(N+1)} &= \boldsymbol{\mu}^N\mathbf{\Phi}^{*T}\mathbf{J}\mathbf{u}^{(1)} + \sum_{k=1}^{N}\boldsymbol{\mu}^{N-k}\mathbf{Q}_B^{(k)}\\ \mathbf{\Phi}^{T}\mathbf{J}\mathbf{u}^{(1)} &= \boldsymbol{\mu}^N\mathbf{\Phi}^{T}\mathbf{J}\mathbf{u}^{(N+1)} - \sum_{k=1}^{N}\boldsymbol{\mu}^{k}\mathbf{Q}_B^{\star(k)}\end{aligned} \tag{45}$$

By decomposing the components corresponding to $\mathbf{q}$ and $\mathbf{F}$ of $\mathbf{u}^{(1)}$ and $\mathbf{u}^{(N+1)}$, we get

$$\begin{aligned}\boldsymbol{\mu}^N\mathbf{\Phi}_q^{\star T}\mathbf{F}_L^{(1)} + \mathbf{\Phi}_q^{*T}\mathbf{F}_R^{(N+1)} &= -\boldsymbol{\mu}^N\mathbf{\Phi}_F^{*T}\mathbf{q}_L^{(1)} + \mathbf{\Phi}_F^{*T}\mathbf{q}_R^{(N+1)} + \sum_{k=1}^{N}\boldsymbol{\mu}^{N-k}\mathbf{Q}_B^{(k)}\\ \mathbf{\Phi}_q^{T}\mathbf{F}_L^{(1)} + \boldsymbol{\mu}^N\mathbf{\Phi}_q^{T}\mathbf{F}_R^{(N+1)} &= -\mathbf{\Phi}_F^{T}\mathbf{q}_L^{(1)} + \boldsymbol{\mu}^N\mathbf{\Phi}_F^{T}\mathbf{q}_R^{(N+1)} + \sum_{k=1}^{N}\boldsymbol{\mu}^{k}\mathbf{Q}_B^{\star(k)}\end{aligned} \tag{46}$$

Then, we can write

$$\begin{bmatrix}\boldsymbol{\mu}^N\mathbf{\Phi}_q^{\star T} & \mathbf{\Phi}_q^{\star T}\\ \mathbf{\Phi}_q^{T} & \boldsymbol{\mu}^N\mathbf{\Phi}_q^{T}\end{bmatrix}\begin{bmatrix}\mathbf{F}_L^{(1)}\\ \mathbf{F}_R^{(N+1)}\end{bmatrix} = \begin{bmatrix}-\boldsymbol{\mu}^N\mathbf{\Phi}_F^{\star T} & \mathbf{\Phi}_F^{\star T}\\ -\mathbf{\Phi}_F^{T} & \boldsymbol{\mu}^N\mathbf{\Phi}_F^{T}\end{bmatrix}\begin{bmatrix}\mathbf{q}_L^{(1)}\\ \mathbf{q}_R^{(N+1)}\end{bmatrix} + \sum_{k=1}^{N}\begin{bmatrix}\boldsymbol{\mu}^{N-k}\mathbf{Q}_B^{(k)}\\ \boldsymbol{\mu}^{k}\mathbf{Q}_B^{\star(k)}\end{bmatrix} \tag{47}$$

By substituting equation (24) into equation (47), we obtain

$$\begin{aligned}\sum_{k=1}^{N}\begin{bmatrix}\boldsymbol{\mu}^{N-k}\mathbf{Q}_B^{(k)}\\ \boldsymbol{\mu}^{k}\mathbf{Q}_B^{\star(k)}\end{bmatrix} &= \begin{bmatrix}\boldsymbol{\mu}^{N-k}\left(\boldsymbol{\mu}^{-1}\boldsymbol{\Phi}_q^{\star T}\mathbf{D}_{LI}+\boldsymbol{\Phi}_q^{\star T}\mathbf{D}_{RI}\right) & -\boldsymbol{\mu}^{N-k}\boldsymbol{\Phi}_q^{\star T}\\ \boldsymbol{\mu}^{k}\left(\boldsymbol{\mu}\boldsymbol{\Phi}_q^{T}\mathbf{D}_{LI}+\boldsymbol{\Phi}_q^{T}\mathbf{D}_{RI}\right) & -\boldsymbol{\mu}^{k}\boldsymbol{\Phi}_q^{T}\end{bmatrix}\begin{bmatrix}\mathbf{F}_I^{(k)}\\ \mathbf{F}_B^{(k)}\end{bmatrix}\\ &= \begin{bmatrix}\boldsymbol{\mu}^{N-k-1}\boldsymbol{\Phi}_q^{\star T} & \boldsymbol{\mu}^{N-k}\boldsymbol{\Phi}_q^{\star T}\\ \boldsymbol{\mu}^{k+1}\boldsymbol{\Phi}_q^{T} & \boldsymbol{\mu}^{k}\boldsymbol{\Phi}_q^{T}\end{bmatrix}\begin{bmatrix}\mathbf{D}_{LI} & \mathbf{0}\\ \mathbf{D}_{RI} & -\mathbf{I}\end{bmatrix}\begin{bmatrix}\mathbf{F}_I^{(k)}\\ \mathbf{F}_B^{(k)}\end{bmatrix}\end{aligned} \tag{48}$$

In a similar way, we can write (see [**?**])

$$\begin{aligned}\begin{bmatrix}-\boldsymbol{\mu}^{N}\boldsymbol{\Phi}_F^{\star T} & \boldsymbol{\Phi}_F^{\star T}\\ -\boldsymbol{\Phi}_F^{T} & \boldsymbol{\mu}^{N}\boldsymbol{\Phi}_F^{T}\end{bmatrix} &= \begin{bmatrix}\boldsymbol{\mu}^{N}\boldsymbol{\Phi}_q^{\star T} & \boldsymbol{\Phi}_q^{\star T}\\ \boldsymbol{\Phi}_q^{T} & \boldsymbol{\mu}^{N}\boldsymbol{\Phi}_q^{T}\end{bmatrix}\begin{bmatrix}\mathbf{D}_{LI} & \mathbf{0}\\ \mathbf{0} & \mathbf{D}_{RR}\end{bmatrix}\\ &+ \begin{bmatrix}\boldsymbol{\mu}^{N-1}\boldsymbol{\Phi}_q^{\star T} & \boldsymbol{\mu}\boldsymbol{\Phi}_q^{\star T}\\ \boldsymbol{\mu}\boldsymbol{\Phi}_q^{T} & \boldsymbol{\mu}^{N-1}\boldsymbol{\Phi}_q^{T}\end{bmatrix}\begin{bmatrix}\mathbf{D}_{RL} & \mathbf{0}\\ \mathbf{0} & \mathbf{D}_{LR}\end{bmatrix}\end{aligned} \tag{49}$$

By substituting equations (48), (49) into equation (47), we obtain the result in equation (29).