HAL open science

Vehicle Hardware-In-the-Loop System for ADAS Virtual Testing

Romain Rossi, Clément Galko, Hariharan Narasimman, Xavier Savatier

To cite this version:

Romain Rossi, Clément Galko, Hariharan Narasimman, Xavier Savatier. Vehicle Hardware-In-the-Loop System for ADAS Virtual Testing. uillermo Payá-Vayá; Holger Blume. Towards a Common Software/Hardware Methodology for Future Advanced Driver Assistance Systems, River Publishers, pp.251-267, 2017, 9788793519138. 10.13052/rp-9788793519138 . hal-02092923

HAL Id: hal-02092923

https://hal.science/hal-02092923v1

Submitted on 2 Jun 2022

HAL is a multi-disciplinary open access archive for the deposit and dissemination of scientific research documents, whether they are published or not. The documents may come from teaching and research institutions in France or abroad, or from public or private research centers.

L'archive ouverte pluridisciplinaire **HAL**, est destinée au dépôt et à la diffusion de documents scientifiques de niveau recherche, publiés ou non, émanant des établissements d'enseignement et de recherche français ou étrangers, des laboratoires publics ou privés.

Distributed under a Creative Commons Attribution - NonCommercial 4.0 International License

11. Vehicle Hardware-In-the-Loop System for ADAS Virtual Testing

Romain Rossi, Clément Galko, Hariharan Narasimman and Xavier Savatier

Univ. Rouen, UNIROUEN, ESIGELEC, IRSEEM 76000 Rouen, France

DOI : 10.13052/rp-9788793519138

11.1 Introduction

Testing vehicular functions can be a very tedious task. The classical approach tries to tackle this problem using a multiple-stage validation and testing process. The first step is a Model-In-the-Loop (MIL) approach which allows quick algorithmic development without involving dedicated hardware. Usually, this level of development involves high-level abstraction software frameworks running on general-purpose computers. The second step is a Software-In-the-Loop (SIL) validation, where the actual implementation of the developed model will be evaluated on general-purpose hardware. This step requires a complete software implementation very close to the final one. The last step of this validation process is Hardware-In-the-Loop (HIL) which involves the final hardware, running the final software with input and output connected to a simulator. This proven process is very widely used in the transportation industry and has enabled the development of very high quality components which are then integrated into bigger systems or vehicles. Modern vehicles however integrate so many such components that the integration phase has become more complex and also requires a multi-step validation process. The final integration tests are performed on tracks or roads. While mandatory, these real-condition tests are limited because of multiple factors and have a very high cost.

Testing a complex system like a modern vehicle on a test track or on a real road involves complex and costly engineering. First of all, to be testable the vehicle must be fully or nearly-fully functional. This limits the testing opportunity to a very late stage in the development process and implies high engineering costs. Moreover, because the real-condition test is very constrained in time and space, the test coverage is not complete and only a very small variety of real-world conditions can be tested.

To address these limitations and lower the cost, modern ADAS (Advanced Driver Assistance Systems) development frameworks uses a virtual test bench approach where realistic simulator software and hardware are used to enable faster and less expensive tests with better coverage on complete vehicles. In this document, we propose a virtual testing system built on a chassis dynamometer which enables a complex test scenario to be applied early in the ADAS development process.

Our proposed system, named SERBER (Simulateur d' Environnement Routier integré à un Banc de test véhicule pour l'Evaluation de stratégies de gestion de l'éneRgie embarquée) aims to ease ADAS prototypes testing and at the same time, analyze the energy efficiency of the prototype system using the standard equipment of the chassis dynamometer. A previous version of this system has been published in [3], which presented the SERBER system and showed preliminary results.

11.2 State of the Art

In the automotive industry, car manufacturers use different ways to test and validate ADAS and other embedded systems. An extensive study of the state of the art in ADAS testing and validation methods can be found in [1]. These test methods can be grouped in two categories: test-bench tests and in-vehicle tests.

For test-bench tests, three approaches are usually used during the development cycle: Model-In-the-Loop (MIL), Software-In-the-Loop (SIL) and Hardware-In-the-Loop (HIL). In MIL, a model of the developed system is integrated in a simulation loop with models of vehicle dynamics, sensor, actuators and traffic environment. After successful MIL validation, the SIL approach allows to replace the tested model with a real software implementation for real-time operation validation. The last step, HIL, consists of a combination of simulated and real components in order to validate the functionality of the developed system on both hardware and software aspects.

Test-bench tests are very useful as they provide a safe, repeatable and reliable way to validate these embedded systems under a variety of operating conditions. This kind of tests also has some drawbacks. For example, the interaction with other ADAS is difficult to test as well as the integration in the vehicle system. A sample of a HIL test bench for complex ADAS is available in [2].

The second category of tests methods are in-vehicle tests. These tests require a prototype to integrate the developed system. Again, three approaches are commonly used: test-drives on test-tracks, test-drives on open-roads and Vehicle-Hardware-In-the-Loop (VeHIL).

The first two approaches are very similar and assume the prototype to be driven in real-conditions. The test-track allows control of some environment parameters (traffic, some weather conditions, road signs, road type and so on) but requires big infrastructures. The open-road tests require less dedicated infrastructures but are of limited use because of the difficulty to reproduce the needed conditions, and the underlying safety problems. Both of these methods are costly and time-consuming and can't be used early in the development cycle because they require heavy engineering efforts to have a fully functional prototype to drive.

A very interesting solution which combines nearly all the advantages of the previous methods without most of their drawbacks is the VeHIL approach. This kind of tests is a combination of the HIL and test-drives approaches. Functional as well as integration tests can be done easily and early in the development cycle. As the vehicle is physically locked on the chassis-dynamometer, this system greatly improves the safety of the tests. Because it is an indoor test, every environmental parameter (humidity, ambient light, temperature and so on) can easily be controlled and thus the repeatability of the test is ensured.

Existing VeHIL systems like the one described in [1] and currently used by [2] relies on mobile platforms (called Mobile Bases) to move targets (fake cars and pedestrians) in front of the tested vehicle in order to trigger the various embedded functions (pedestrian detection, ACC, AEB and so on). This setup however needs heavy infrastructure: the chassis-dynamometer is installed in a very large room (200 × 40 m) and the targets are moved at high speed by the Mobile Bases which can be dangerous for both the tested vehicle and the persons involved. Thus, the tests are remotely executed from a control room and the test area has to be evacuated.

11.3 Proposed System

To address the problems of existing VeHIL systems (large infrastructures, fast moving targets, hazard for people), we propose a system which associates a chassis dynamometer with multi-sensor road environment simulation software. The simulator uses a description of the virtual environment and the position of the vehicle to generate multi-sensors data. These data are then fed into the sensors of the real car placed on the chassis dynamometer. On the other way, motion data (speed, acceleration) are gathered from the chassis-dynamometer and used to update the simulated vehicle speed and position.

Figure 11.1

Overview of the SERBER VeHIL system.

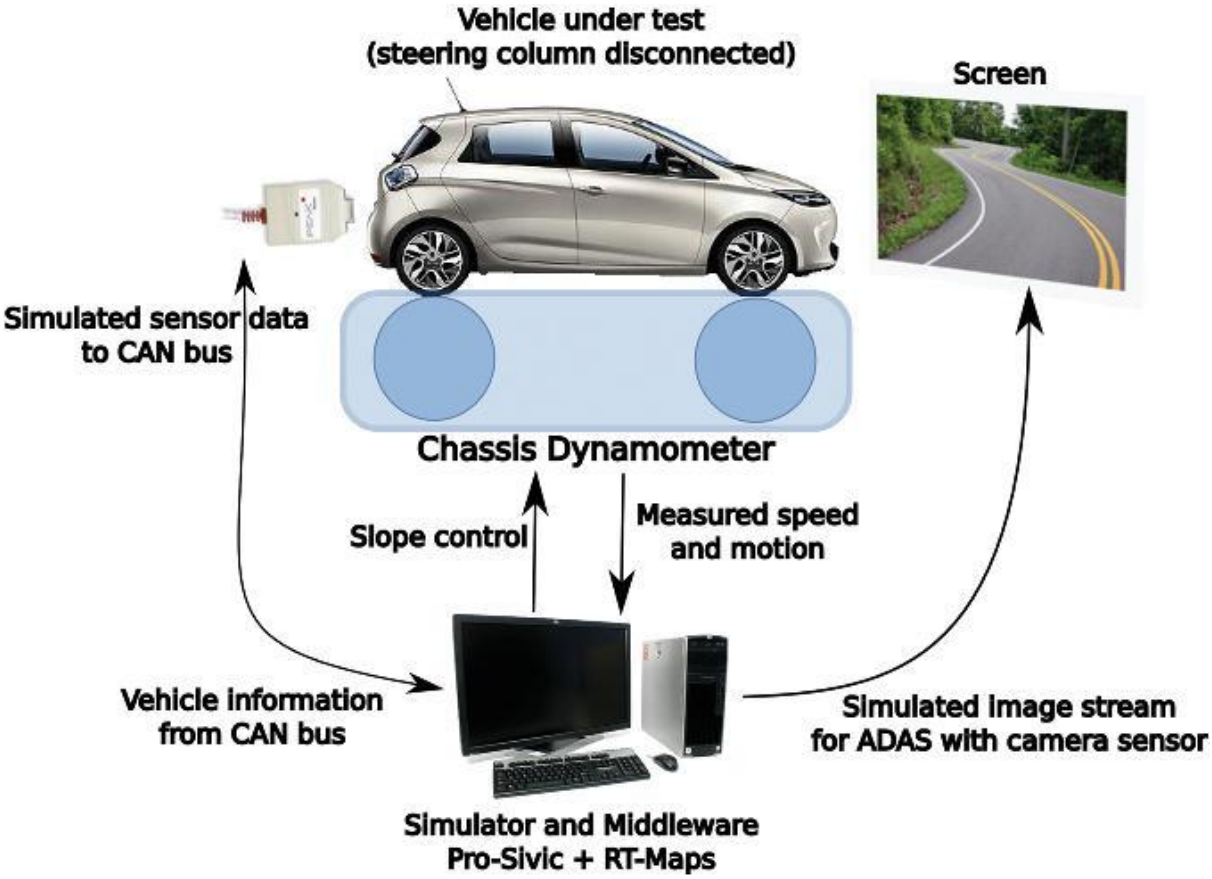

Our system, as seen in Figure 11.1 is mainly composed of three parts: the chassis-dynamometer, multi-sensor simulation software running in a computer and devices to feed the vehicle sensors like LCD screen and the CAN bus interface with synthetic data. The chassis-dynamometer is standard equipment, the main requirement is to be able to connect it with the simulation computer in order to read the vehicle actual speed and control the simulated slope by adjusting the friction force applied by the dynamometer. The simulation software is at the core of our system and is responsible for the generation of sensor data to be fed into ADAS sensors. We use the Pro-Sivic software dedicated to this kind of application. An introduction to Pro-Sivic can be found in [4]. The difficulties in our proposed system lies mainly in the way to fool (i.e. feed synthetic data into) the vehicle's sensors with the data produced by the simulation software.

Three ways can be used to fool sensors. The first way (full simulation) is to disconnect completely the ADAS and replace it with an electronic probe controlled by our system, which simulates the ADAS behavior completely. The simulated data (ADAS outputs) are sent directly into the vehicle internal communication bus (CAN) to be used by the other vehicular functions. The second way (sensor simulation) is to disconnect only the sensor part of the ADAS and replace it with an electronic probe. The simulator generates data according to the specification of the simulated sensor. The "signal processing" part of the ADAS is kept in the loop, so it can be tested by the system. This approach however requires the sensor to be separated from the main ADAS unit. The last way (stimulation) is to keep the full ADAS in the loop and send physical stimuli to the ADAS sensor through dedicated hardware. For example, an LCD screen can be placed in front of an embedded camera or a Hyper-Frequency generator can send signals to an embedded RADAR sensor.

This last solution is the preferred one, as it keeps the whole ADAS in the testing loop and limits the modifications done to the vehicle. So the objective of our work is to be able to simulate and fool every vehicle sensors. This approach however is very difficult to achieve for some kind of sensors, like inertial sensors and environmental sensors, or needs very complex stimulation hardware for RADAR and LIDAR.

With such a hardware-in-the-loop system, multiple scenarios can be implemented and tested in the safety and convenience of an indoor workshop. This system can be used for new ADAS prototyping as it is very easy to produce test-cases for the specific system under development. It can also be used to test the integration of multiple ADAS in a car, using a set of predefined test-cases to validate their interaction. It can also be used for very complex ADAS or fully-automated vehicle development where the embedded system relies simultaneously on multiple sensors to operate, because it is able to simulate nearly every aspect of the road environment at the same time.

Moreover, the use of a chassis dynamometer allows a simultaneous analysis of various performance indicators of the vehicle, including energy consumption and pollution. This coupling is a real benefit compared to traditional test setups and enables the early evaluation of the energy consumption impact of various changes in the ADAS systems. For example, the fuel consumption and pollution of a car equipped with Adaptive Cruise Control (ACC) can be continuously monitored as various ACC algorithms are developed and tested.

11.4 Hardware Implementation

The proposed system is implemented at IRSEEM facilities. A chassis-dynamometer is available in one of our technological platform and is used as a building block. This chassis dynamometer is a Horiba Vulcan 4WD with two independent axles. It provides real-time velocity information based on the real vehicle wheel speed. It can also apply a friction force equivalent to a 5% slope of the road. The control system allows interfacing through analog inputs and outputs, these are used to control the friction force to simulate the slope and to read the actual speed of the vehicle in real-time. A complete description of the used chassis-dynamometer is available from the Horiba website [5]. We use an analog input/output device from National Instruments to link the simulation computer with the chassis-dynamometer control system.

One of the main challenges in our proposal is the ability to generate synthetic data and feed the ADAS sensors with this data. The synthetic data generation for vision-based, RADAR-based

and LIDAR-based sensors is handled by Pro-Sivic. The main problem is how to correctly stimulate the sensors to feed it with this simulation data.

11.4.1 Sensors Stimulation Solutions

Feeding sensors with simulated data is a key function of our system and a complex challenge. A vehicle can embed numerous sensors like cameras, inertial sensors, temperature sensors, rain sensors, odometer, LIDAR, RADAR, GPS and more. Because of the broad variety of sensor types, different approaches are needed to be able to control what the sensor reports to the ADAS processor.

For camera-based sensors, we use direct stimulation using a standard computer display placed in front of the camera. A first successful test was done with a 32” LCD screen. A display system using a projector would allow a bigger image surface and is currently being tested. Image field-of-view and distortions have to be taken into account for an accurate stimulation of the ADAS sensor. Special care must be taken in order to completely cover the sensor’s field of view. This is especially difficult with wide-angle or fish-eye cameras and would require special setup.

The rain sensor can easily be triggered using a localized water diffusion device (sprinkler) actuated by a solenoid valve. This system can also be used to generate rain-like perturbation on camera sensors by directly applying water on the windshield. However, such solutions can produce perturbations which are not reproducible.

GPS simulation devices already exist for factory tests and are able to generate a controlled fake position to be interpreted by GPS receivers nearby. This kind of device could easily be integrated with our system to provide real-time positioning to the vehicle and embedded ADAS using GPS as a source of information. These systems are however costly and a direct transmission of generated NMEA frames to the ADAS is vastly more cost effective, but needs a small modification of the vehicle under test.

Likewise, real-time target generators for various types of RADAR (24 and 76 GHz) are available as off-the-shelve component. These systems cans also be coupled with the real-time simulation software to report the position and speed of simulated actors to the vehicle.

A recent paper [6] shows a possible implementation of a target simulator for LIDAR sensors. In this paper, a pulse generator is synchronized with the LIDAR in order to inject false object echo. Fully functional real-time target simulators are however to be demonstrated. This setup could be used in our system like the RADAR target simulator described above.

Inertial sensors are not covered yet. These sensors are usually deeply embedded in ECU and can be difficult to physically disconnect. An option is to physically move the vehicle using external actuators, but this implies heavy equipment. Another option is to open the ECU and physically replace the sensor with an electronic probe, which is time-consuming and difficult to achieve without complete documentation.

For Ultra-Sonic range-finder, two main solutions are possible. The first one is to use a sound generator simulating echo. The other one is to use small mobile targets located directly in front of the sensors. As these sensors are usually used only for low-speed maneuver and short-range detection, these mobile systems would not require a big infrastructure and can safely be used even in the presence of people.

Recently, Vehicle-to-Vehicle (V2V) and Vehicle-to-Infrastructure (V2I) communication has widespread with the 802.11p standard. These systems are used as a kind of virtual sensor providing the position, relative speed and status of the vehicles in the vicinity. Because of their operation, such systems are easy to connect with a computer. In our system we used one 802.11p modem to generate synthetic CAM and DENM messages to be interpreted by the vehicle under test.

Feeding the sensor with simulated data is not an easy task and each sensor has to be addressed differently. We plan to use sensor stimulation whenever possible, and fall back to sensor simulation and sending data in the CAN bus when stimulation is not feasible. Some kind of sensors appears to be relatively easy to stimulate (like cameras), others needs very complex and costly equipment (GPS, RADAR and inertial sensors).

For all these sensors, an alternative approach would be to have a cooperative software embedded in the ECU which would allow to overwrite actual measurements through the CAN bus (or another communication medium). While this solution seems unlikely to be possible on production vehicles; prototypes and test vehicles can be equipped with such debugging software, enabling a controlled and effective way to bypass sensors and feed synthetic data straight to the embedded processors.

11.4.2 Software Implementation

Our software runs on a high-end laptop computer and is based on two main building blocks: multi-sensor simulation software (Pro-Sivic) and a real-time middleware (RTMAPS). A block diagram of the complete system is presented in Figure 11.2.

Figure 11.2

Block diagram of the SERBER system.

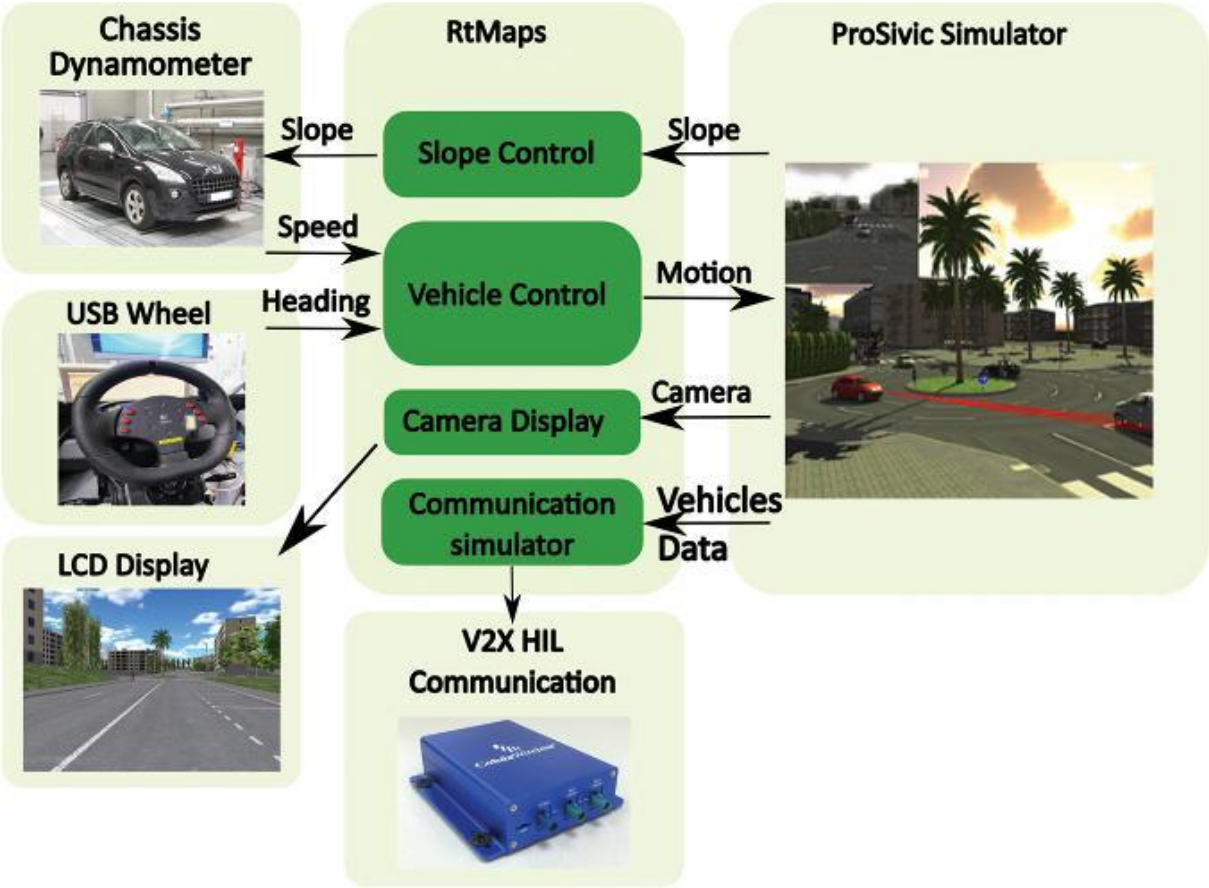

To run the simulations, we used Pro-Sivic from Civitec. This real-time multi-sensor simulation software is a fusion between a driving simulator and a multi-sensor simulator. Pro-Sivic provides kinetic data and sensor data from the simulated vehicle and can also be used as a driving simulator. A complete description of Pro-Sivic is given in [4]. Pro-Sivic is able to generate realistic video output which can be directly used to stimulate camera-based ADAS. A sample view of Pro-Sivic video output can be seen in Figure 11.3.

Figure 11.3

Sample video output of Pro-Sivic.

The other main software building block, RTMAPS from Intempora is a middleware which interconnects all other parts of the system. It is also used to produce CAN messages to be sent on the vehicle bus and perform other implementation-specific operations. RTMAPS is a component-based graphical programming framework to easily build multi-tasks or distributed applications. This software is described in detail in [7] and in this book (Part 1, Chapter 4). RTMAPS provides native interfaces to multiple simulation software, including Pro-Sivic, and also numerous components for device support (CANpeak, serial GPS, National Instruments I/O device and so on).

The most significant part of the RTMAPS diagram is presented in Figure 11.4. This diagram main task is to handle the communication between Pro-Sivic and the chassis-dynamometer; and to generate Vehicle-to-Vehicle and Vehicle-to-Infrastructure communication messages based on the simulation data.

Figure 11.4

RTMAPS diagram of the system (extract).

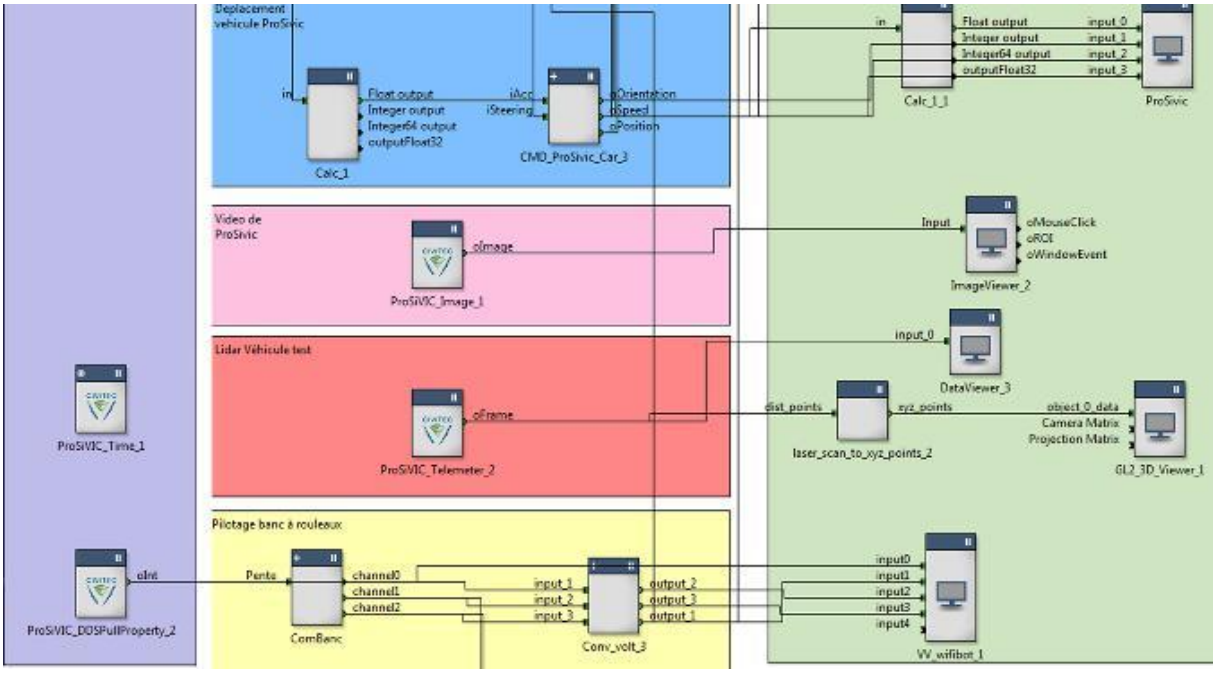

Our chassis-dynamometer has a hardware limitation: the vehicle front wheels cannot turn when the vehicle is moving; or damage can occur. In order to prevent this, the test vehicles driving wheel is physically removed and replaced by a USB joystick connected to the computer. This allows lateral control of the virtual vehicle by the driver, in a way very similar to driving simulators, while the physical wheels stays in line with the chassis dynamometer.

11.5 Experimental Setup

In order to test our system, we equipped a small fully-electrical vehicle with an after-market ADAS system: a Mobileye 560. This ADAS, designed to be installed on the windshield, is based on a forward-looking camera and an integrated processor which performs real-time image processing. The main unit contains the camera and a processing device, and a separate display is used to inform the driver of the working state of the system and to show warnings. A Bluetooth connection allows using a dedicated application on a smartphone or tablet to display various data in addition to the one already shown on the small display. A picture of the system is shown in Figure 11.5 where the main unit is shown on the right, the small display in the middle, and a smart-phone running the dedicated application on the left.

Figure 11.5

Mobileye 560 aftermarket vision-based ADAS.

The Mobileye system is able to detect and track many objects: pedestrians, other vehicles, speed-limit signs, and white lines. The position of the tracked objects, as well as the vehicle speed information gathered from the CAN-bus is used to detect dangerous situations and to warn the driver: risk of pedestrian collision, risk of forward collision, lane departure, over-speed and so on. All the processing is done inside the Mobileye main unit and only high-level information is available through a small display. The Mobileye system is described in details in [8] and up-to-date information is available in [9].

The V2V communication test bench is composed of two Khoda Wireless MK 2802.11p modems equipped with MobileMark SMW-303 multiband antennas. One of the modem is used to send CAM and DENM messages generated from virtual vehicles data. The other modem is used as an embedded unit in the vehicle under test. The data received by this second modem are used to update a dashboard HMI. An extract of the RTMAPS diagram responsible for the communication task is shown Figure 11.6.

Figure 11.6

RTMAPS diagram of the V2V task.

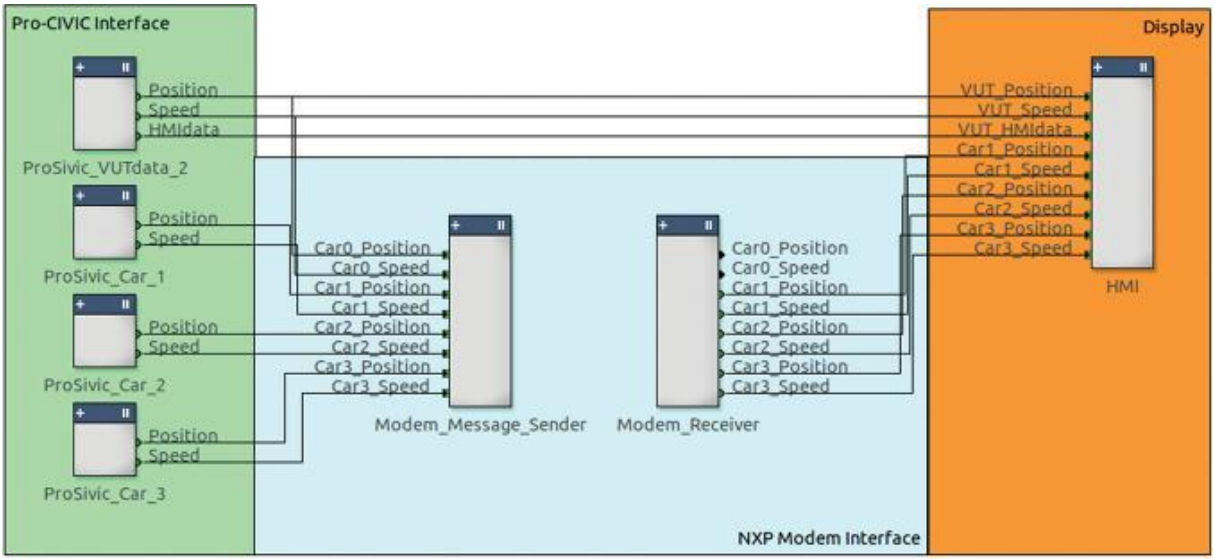

The test vehicle equipped with the Mobileye is placed on the chassis dynamometer, and an LCD screen is placed in front of the windshield, in the sight of both the driver and the Mobileye system. The Figure 11.7 shows a view of the test vehicle installed on the chassis-dynamometer. The LCD screen can be seen in front of the car.

Figure 11.7

The Biocar test vehicle on the Horiba chassis dynamometer.

The whole system was tested with an urban scenario and environment. This scenario is composed of a few roads with some buildings and trees; the traffic is simulated with four cars following a predefined path. The virtual car can freely move inside this environment and is directed by actions from the driver. A view of the urban scenario is shown in Figure 11.8.

Figure 11.8

Overview of the urban environment in Pro-Sivic.

11.6 Results

A first series of results have been obtained with the described experimental setup. The virtual car forward motion is completely controlled by the real vehicle controls (accelerator and brake pedals), while the lateral control is obtained from the USB driving wheel connected to the computer.

First, the integration of the chassis-dynamometer with the simulation software was tested. The real car speed is read and used to update the virtual vehicle motion. In Pro-Sivic, the road slope under the vehicle is processed and this information is used to control the resistive torque applied by the chassis-dynamometer on the real vehicle. During the tests, the car driver can feel the resistive torque applied by the system on the vehicle wheels when climbing a slope, and has a feeling of free wheels when going down. The Figure 11.9 shows a picture taken near the driver's seat. Driving the car is natural and intuitive, just as if the car would be on a real road. The driving simulator use-case is not the main goal of this system but this first test proves the interest of the SERBER system even for ADAS which involves driver interaction.

Figure 11.9

Inner view of the vehicle.

The ADAS sensor stimulation abilities of the system were tested using the Mobileye. This test showed promising results as the Mobileye was fooled by the simulation and worked as if the car would be running on a real road. The lane departure warning and forward collision warning have been triggered by the corresponding simulated situations. The Figure 11.10 shows the lane departure warning being triggered when the car is crossing the road central line with the blinkers off. In this picture, the road is clearly seen on the LCD screen in the top right part. In the bottom left part, a tablet running the Mobileye application shows a graphical representation of the warning being triggered.

Figure 11.10

Lane departure warning triggered.

The last tested functionality is the V2V communication simulation. In this test, four virtual vehicles are simulated and their global positions are broadcasted by the 802.11p modem using CAM messages. Various DENM messages are also broadcasted by virtual vehicles. Another modem is embedded in the vehicle under test and receives these messages. An HMI is used to display this data to the driver, using a RADAR-like circular representation. A snapshot of the HMI is shown in Figure 11.11.

Figure 11.11

V2V Communication HMI.

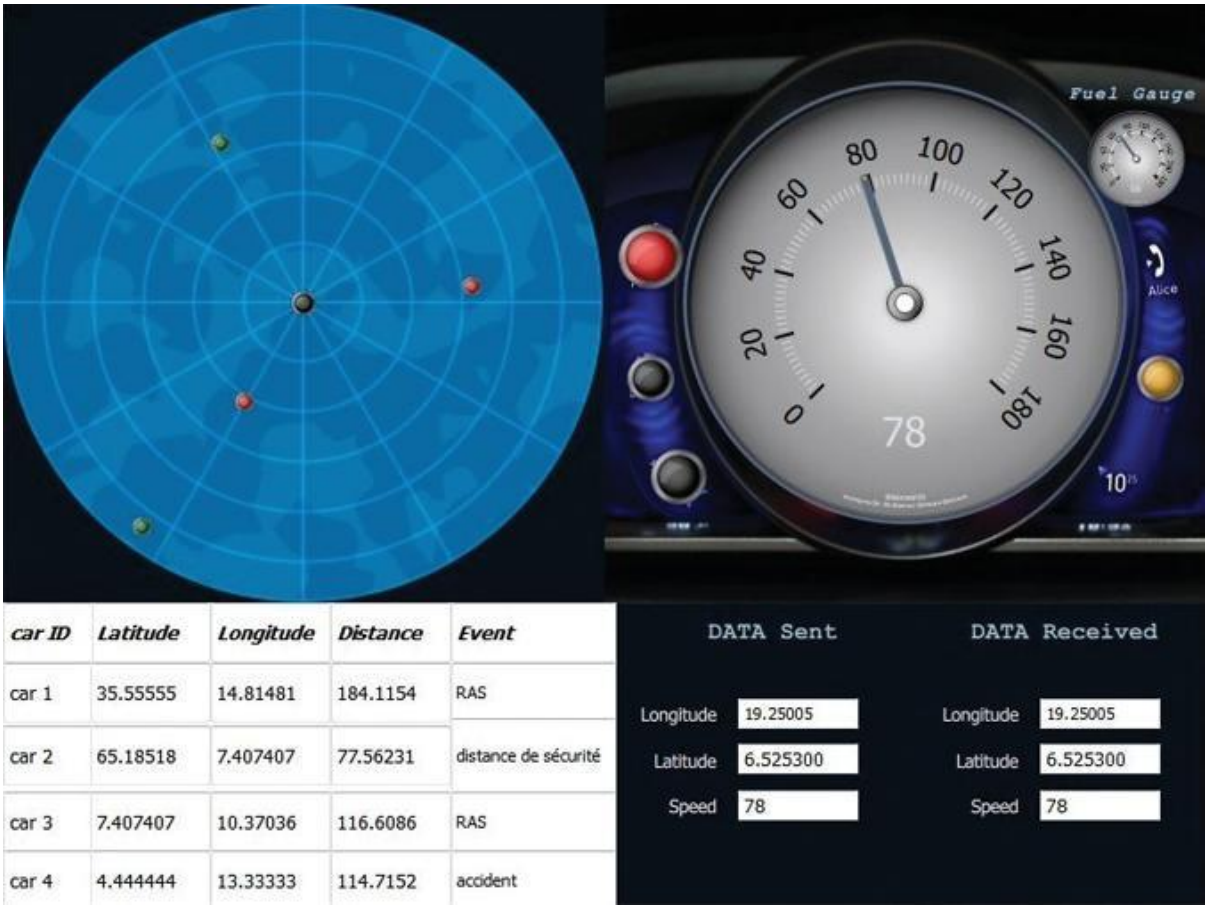

11.7 Conclusion and Future Work

In this chapter, we have presented SERBER, our Vehicle-Hardware-In-the-Loop system which uses a chassis-dynamometer and a multi-sensor simulation software to create a kind of virtual reality platform for intelligent vehicles equipped with ADAS using sensors to gather information from the surrounding environment. The combination of the simulation software and the chassis-dynamometer allows applying the resulting force from a simulated slope to the real vehicle, while the sensor data generated by the simulation software are fed into the ADAS.

We discussed different way show the system can feed simulated data to sensors, both at the communication-bus level (CAN messages) and at the physical-stimuli level.

We described our current implementation based on Pro-Sivic, RTMAPS and a Horiba chassis-dynamometer and presented the first results obtained by a complete test using a small electrical car equipped with an after-market camera-based ADAS and 802.11p modem. The result presented in this paper shows the ability to fool an ADAS system based on a forward-looking camera. Various functions of the ADAS are triggered when corresponding situations are simulated: forward collision warning and lane departure warning.

The DESERVE project aims to provide an environment for ADAS design, development and pre-validation. In this context, SERBER provides a virtual testing platform enabling early tests of newly designed ADAS with realistic scenarios and testing environments. This system can also be used to validate multiple ADAS interaction on the same vehicle and aims to be a complete test and validation system for fully-autonomous vehicles.

SERBER is more compact and simpler to use than other VeHIL systems which use mobile bases to move fake cars at high speed in order to simulate other vehicles motion. In fact, our system can easily be installed on a standard chassis-dynamometer, if it can be controlled by software, requiring only minor physical modification of the facility.

The work presented in this chapter is a first step towards a complete simulation system able to stimulate multiple sensors in the tested vehicle. Currently, only camera-based ADAS and V2X communication systems can be stimulated.

The first area of improvement for the current system is the simulation and stimulation of additional sensors. A RADAR virtual target generator is currently being developed in order to fool RADAR-based ADAS like Adaptive Cruise Control (ACC) and Automatic Emergency Braking (AEB). A LIDAR target generator and GPS simulator can be integrated to provide a quite complete setup able to test realistic scenarios.

A second area of improvement is in the simulation environment and scenario. To be able to test corner-cases and complex interaction of various ADAS functions, sophisticated scenarios involving various road environments, pedestrians, other vehicles and driver behavior have to be designed and implemented.

Acknowledgment

The DESERVE project (Development platform for Safe and Efficient dRiVE, is a project funded by ECSEL-JU (http://ecsel.eu) and is available at http://deserve-project.eu

The SERBER project (Simulateur d'Environnement Routier integré à un Banc de test véhicule pour l'Evaluation de stratégies de gestion de l'éneRgie embarquée) is funded by Institut Carnot ESP (http://www.carnot-esp.fr).

References

1. C. Galko, R. Rossi and X. Savatier, "Vehicle-Hardware-In-The-Loop System for ADAS Prototyping and Validation," in IEEE International Conference on Embedded Computer Systems: Architectures, Modeling, and Simulation (SAMOS XIV), SAMOS Island, Greece, 2014. Google Scholar
2. O. Gietelink, J. Ploeg, B. De Schutter and M. Verhaegen, "Development of advanced driver assistance systems with vehicle hardware-in-the-loop simulations," Vehicle System Dynamics, Vol. 44, No. 7, pp. 569–590, 2006. Google Scholar
3. K. Athanasas, C. Bonnet, H. Fritz, C. Scheidler, and G. Volk, "VALSE-validation of safety-related driver assistance systems," chez Intelligent Vehicles Symposium, 2003. Proceedings. IEEE, 2003. Google Scholar
4. "Vehicle Hardware-In-the-Loop," [Online]. Available: https://www.tassinternational.com/VeHIL. [Accessed 18 08 2016]. Google Scholar
5. N. Hiblot, D. Gruyer, J.-S. Barreiro and B. Monnier, "Pro-SiVIC and ROADS. A Software suite for sensors simulation and virtual prototyping of ADAS," in Proceedings of DSC, 2010. Google Scholar
6. "Chassis Dynamometer VULCAN," [Online]. Available: http://www.horiba.com/automotive-test-systems/products/mechatronic-systems/engine-test-systems/details/vulcan-emscd48-626/. [Accessed 18 08 2016]. Google Scholar

7. J. Petit, B. Stottelaar, M. Feiri and F. Kargl, “Remote Attacks on Automated Vehicles Sensors: Experiments on Camera and LiDAR,” in Black Hat Europe, 2015. Google Scholar
8. B. Steux, P. Coulombeau and C. Laurgeau, “RTmaps: a framework for prototyping automotive multi-sensor applications,” in Proc. Intelligent Vehicles Symposium, 2000. Google Scholar
9. I. Gat, M. Benady and A. Shashua, “A monocular vision advance warning system for the automotive aftermarket,” in SAE World Congress & Exhibition, 2005. Google Scholar
10. “MobilEye 5-series product page,” [Online]. Available: https://www.mobileye.com/products/mobileye-5-series/. [Accessed 18 08 2016]. Google Scholar