HAL
open science

Design of adaptive PID controllers based on adaptive Smith predictor for ultra-local model control

Hajer Thabet, Mounir Ayadi, Frédéric Rotella

To cite this version:

Hajer Thabet, Mounir Ayadi, Frédéric Rotella. Design of adaptive PID controllers based on adaptive Smith predictor for ultra-local model control. International Journal of Automation and Control, 2017, 11 (2), pp. 222-238. 10.1504/IJAAC.2017.083311 . hal-02053178

HAL Id: hal-02053178

https://hal.science/hal-02053178

Submitted on 1 Mar 2019

HAL is a multi-disciplinary open access archive for the deposit and dissemination of scientific research documents, whether they are published or not. The documents may come from teaching and research institutions in France or abroad, or from public or private research centers.

L'archive ouverte pluridisciplinaire **HAL**, est destinée au dépôt et à la diffusion de documents scientifiques de niveau recherche, publiés ou non, émanant des établissements d'enseignement et de recherche français ou étrangers, des laboratoires publics ou privés.

Open Archive Toulouse Archive Ouverte (OATAO)

OATAO is an open access repository that collects the work of some Toulouse researchers and makes it freely available over the web where possible.

This is an author's version published in: http://oatao.univ-toulouse.fr/20183

Official URL: https://doi.org/10.1504/IJAAC.2017.083311

To cite this version:

Thabet, Hajer and Ayadi, Mounir and Rotella, Frédéric Design of adaptive PID controllers based on adaptive Smith predictor for ultra-local model control. (2017) International Journal of Automation and Control, 11 (2). pp. 222-238. ISSN 1740-7516

Any correspondence concerning this service should be sent to the repository administrator:

tech-oatao@listes-diff.inp-toulouse.fr

Design of Adaptive PID Controllers Based on Adaptive Smith Predictor for Ultra-Local Model Control

H. Thabet

Université de Tunis El Manar, Ecole Nationale d'Ingénieurs de Tunis, Laboratoire de Recherche LA.R.A Automatique, BP 37, 1002, Tunis, Tunisia (e-mail: hajer_ thabet@yahoo.fr)*
*Corresponding author

M. Ayadi

Université de Tunis El Manar, Ecole Nationale d'Ingénieurs de Tunis, Laboratoire de Recherche LA.R.A Automatique, BP 37, 1002, Tunis, Tunisia (e-mail: mounir.ayadi@enit.rnu.tn)

F. Rotella

Ecole Nationale d'Ingénieurs de Tarbes, Laboratoire de Génie de Production, 65016, Tarbes CEDEX, France (e-mail: rotella@enit.fr)

Abstract: In this paper, an ultra-local model control approach based on adaptive Smith predictor is proposed. The design of adaptive PID controller takes into account the estimation of variable time delay which is compensated by the addition of an adaptive Smith predictor. The purpose of this paper is to solve the online estimation problem of time delay thanks to the proposed identification method of ultra-local model parameters. A performance comparison between the proposed control approach and the Smith predictor control with classical PID is carried out. The numerical simulation results of the thermal process study with severe constraints and operating conditions show the superiority of the adaptive PID controller. The robustness with respect to noises, disturbances and system parameter uncertainties of control approaches are highlighted.

Keywords: Ultra-local model control, Online time delay estimation, Adaptive PID controller, Adaptive Smith predictor, Robustness.

1 Introduction

The compensation of time delay represents a recurring problem in the control of industrial processes (4), (38), (40). In order to solve this problem, the Smith predictor is one of predictive type controllers that enhances the performances even in the presence of a large pure delay (20), (32), (33). Indeed, Smith has presented a regulation tool, proposed in (33), for asymptotically stable single input single output (SISO) time delay systems in open-

loop. In this context, the presence of delay on the input or the output is equivalent. The appearance of delays on the system control is identified as a major source of performance degradations for the closed-loop systems. Therefore, the time delay identification presents an indispensable task to build an adequate control law. For this reason, the online identification of time delay presents an open problem, as shown in (27), that has received particular attention during the last few years. In the literature, several works have studied the identification of time delay systems with different identification methods in (4), (16), (21), (24), (25), (27), (38), (39). Indeed, the algebraic identification technique developed by Belkoura et al. in (3; 4), is one of the numerous existing identification methods for time delay systems. This method is based on the algebraic derivation techniques introduced by M. Fliess and H. Sira-Ramírez (12), (14), (15), (31). The concept of this algebraic technique consists, in a first step, to identify the time delay based on the knowledge of studied system parameters and, in a second step, to identify simultaneously the delay and the parameters from the linear system resolution. However, since this technique is not asymptotic, the parameter identification is not independent such that the second estimated parameter depends on the other ones (see, *e.g.* (3), (17)).

The time delays have been also taken into account by the ultra-local model control, recently introduced by M. Fliess and C. Join with the free-model control notion which does not require any mathematical modeling (7), (8), (9), (10), (11), (18), (35), (36), (37). The unknown dynamics is approximated on a very small time interval by an ultra-local model which is continuously updated based on the online algebraic identification techniques (14), (15), (31). The desired behavior is obtained thanks to an adaptive PID controller which is easily tuned and provides the feedforward compensation. This control approach has already many successful concrete applications (1), (9), (10), (11), (18).

Despite the excellent results obtained by this control strategy in the case of time delayed systems, the works of M. Fliess and C. Join have shown that there is not necessary to identify the delays with adaptive PID controllers. However, the delays could be the cause of the control law instability in many cases of delayed system control. For this reason, a new ultra-local model control approach is proposed in this paper in order to find answers for the limitations presented by the free-model control in the case of time delay systems (7), (8), (26). The concept of the proposed approach is based on the linear system resolution method to estimate the ultra-local model parameters. This control strategy allows to compensate the estimated time delay thanks to the adaptive Smith predictor. In order to clarify the performances obtained by the proposed approach, a comparison with the Smith predictor control is carried out. Moreover, this control strategy is applied on a thermal process to test the robustness performances with respect to the noises, disturbance rejection and parameter uncertainties.

The paper is organized as follows. Section 2 is focused on the proposed Smith predictor based approach. Indeed, the time delay identification problem and the adaptive Smith predictor application for the ultra-local model control are developed. The proposed online parameter identification method is developed in Section 3. Section 4 deals with the application of the ultra-local model control approach on a thermal process control. In this section, the numerical simulation results are displayed where the robustness with respect to the noises, disturbance rejection and system parameter uncertainties is tested. A comparison with the Smith predictor control is carried out in order to show the efficiency of the proposed control approaches. Based on the sliding window identification concept, a proposed algebraic method is developed. Some concluding remarks are provided in Section 5.

2 Smith predictor based approach

2.1 Problem formulation

For the sake of simple presentation, we assume that the studied systems are SISO. The input-output behavior of the system is assumed to be well approximated within its operating range by an ordinary differential equation $E\left(y, \dot{y}, \ldots, y^{(a)}, u, \dot{u}, \ldots, u^{(b)}\right) = 0$, which is nonlinear in general and unknown, or at least poorly known. The control input is denoted by u and the output is denoted by y. The ultra-local model control, introduced by M. Fliess and C. Join (7), consists in trying to estimate an unknown quantity via the input and the output measurements, in order to achieve a good output trajectory tracking. The design of an ultra-local model can be written as:

$$y^{(\nu)}(t) = F(t) + \alpha u(t) \tag{1}$$

where:

- $y^{(\nu)}$ is the derivative of order $\nu \geqslant 1$ of y. The integer ν is arbitrarily chosen. In all the known examples until today, the order ν has always been chosen quite low, *i.e.*, 1 or 2.
- $F(t)$ represents time-varying function which subsumes all the structural information of the system as well as of the various possible disturbances, without the need to make any distinction between them.
- α is a non-physical constant parameter. It is chosen arbitrarily by the practitioner such that $\alpha u(t)$ and $y^{(\nu)}$ are of the same magnitude.

In practice, the arbitrary choice of the parameter α presents the first point that renders a delicate choice for the so-called intelligent PID control strategy. The purpose of this paper is to improve the control strategy of (7), (9) by proposing an estimation of the gain α and considered time delay T_R as other unknown parameter. Following this proposal, the expression of the generalized ultra-local model becomes:

$$y^{(\nu)}(t) = F(t) + \alpha(t)\, u(t - T_R(t)) \tag{2}$$

This model must be constantly updated, in which the time-varying functions $F(t)$, $\alpha(t)$ and $T_R(t)$ are estimated based on the knowledge of the input and output measurements.

The delays are taken into account in the works of M. Fliess and C. Join (9), (11). However, it has been shown that the delays are found in the nonlinear term $F(t)$ such as:

$$\begin{aligned} y^{(\nu)}(t) &= F(t) + \alpha(t)\, u(t - T_R(t)) \\ &= F(t) + \alpha(t)\, u(t - T_R(t)) + \beta(t)\, u(t) \\ &\quad -\beta(t)\, u(t) \\ &= F'(t) + \beta(t)\, u(t) \end{aligned} \tag{3}$$

where:

$$F'(t) = F(t) + \alpha(t)\, u(t - T_R(t)) - \beta(t)\, u(t)$$

Nevertheless, we see that $\beta(t)$ is a time-varying parameter and the function $F'(t)$ contains the delayed terms $u(t - T_R(t))$. For this, the identification of time delay with ultra-local model control is needless in the works (9), (11). However, the unknown delays can prevent

the instantaneous reactivity of the control input. To overcome this problem, we consider in this paper a robust compensation of time delay via the application of Smith predictor (34). Therefore, we choose to estimate the three parameters $F(t)$, $\alpha(t)$ and $T_R(t)$ of the generalized ultra-local model (2) in order to benefit of the Smith predictor implementation.

2.2 *Adaptive Smith predictor*

The Smith predictor is basically a time delay compensator. The basic idea consists of eliminating the delays from the feedback control loops (32). The interest of the Smith predictor is to use a primary controller $C(p)$ designed for the delay-free system $H(p)$ as shown in the figure 1. Noting that p is the Laplace operator. The controller $C(p)$ is generally a classical Proportional Integral (PI) or Proportional Integral Derivative (PID) (32).

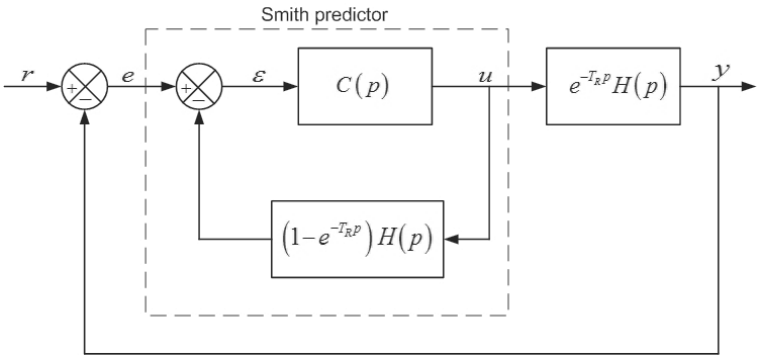

Figure 1 Closed-loop system including a Smith predictor.

The Smith predictor allows to significantly improve the performances in the case where a known constant delay is present on the control input. Neverthless, when it is not the case, the compensation method by Smith predictor becomes difficult to apply in this context, due to the complexity of their extension to a variable delay. This problem is solved by the adaptive Smith predictor which consists to update the time delay in the system control model. This update allows to obtain a more efficient controller based on the knowledge of the estimated delay $\hat{T}_R$.

The proposed control approach in this paper is based on the adaptive Smith predictor represented in the figure 2. The desired behavior is obtained via the primary controller $C(p)$ which is an adaptive Proportional Integral controller, or a-PI, in the case where $\nu = 1$ in (2). Indeed, the estimation of the three functions $\hat{F}(t)$, $\hat{\alpha}(t)$ and $\hat{T}_R(t)$ of the model (2), thus the compensation of estimated time delay $\hat{T}_R(t)$, leads to the following control law:

$$u(t) = \frac{-\hat{F}(t) + \dot{y}^d(t) + K_P e(t) + K_I \int e(t)}{\hat{\alpha}(t)} \tag{4}$$

where:

- $y^d(t)$ is the output reference trajectory, which is obtained via the precepts of the flatness-based control (19), (29).
- $e(t) = y^d(t) - y(t)$ is the tracking error.

- K_P and K_I are the usual tuning gains (2), (23).

Combining the equations (2) and (4) yields to:

$$\ddot{e}(t) + K_P \dot{e}(t) + K_I e(t) = 0 \tag{5}$$

We are therefore left with a linear differential equation with constant coefficients of order 2. The tracking condition is then easily fulfilled by an appropriate tuning of K_P and K_I. The desired performances are obtained thanks, first, to the adaptive PI controller and, secondly, to the good compensation of estimated delay by the compensation term presented in the feedback control loop $\left(\hat{F} + \hat{\alpha}\left(1 - e^{-\hat{T}_R p}\right) u\right)$.

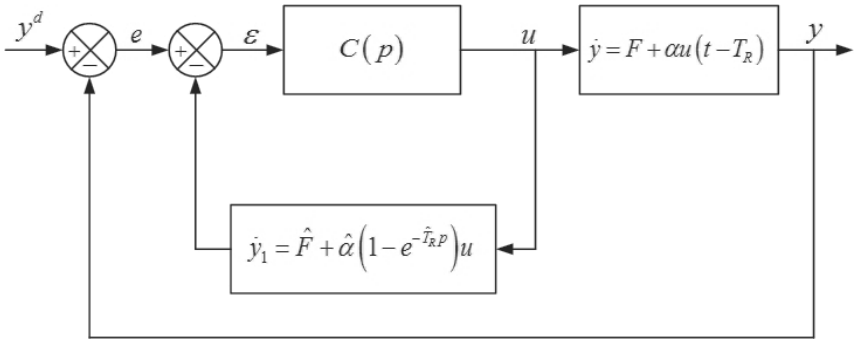

Figure 2 Adaptive Smith predictor.

The compensation term of feedback represents in reality the difference between the delay-free ultra-local model (1) and the ultra-local model with time delay (2). Then, we obtain the following difference:

$$\begin{aligned} \dot{y}_1 &= \left(\hat{F}_1 + \hat{\alpha} u\right) - \left(\hat{F}_2 + \hat{\alpha} u\left(t - \hat{T}_R\right)\right) \\ &= \hat{F}_1 - \hat{F}_2 + \hat{\alpha}\left(u - u\left(t - \hat{T}_R\right)\right) \\ &= \hat{F} + \hat{\alpha}\left(1 - e^{-\hat{T}_R p}\right) u \end{aligned} \tag{6}$$

where $\hat{F} = \hat{F}_1 - \hat{F}_2$. The main advantage of this proposed control strategy consists of providing the desired performances without requiring to have an accurate knowledge of the system model. It is clear that the estimated parameters $\hat{F}$, $\hat{\alpha}$ and $\hat{T}_R$ have a very important role in the compensation of time delay through the adaptive Smith predictor. For this, it is interesting to well choose the identification method of ultra-local model in order to obtain the best possible performances.

3 Online parameter identification method

Before applying the control input to the system, an online simultaneous estimation of the ultra-local model parameters $F(t)$, $\alpha(t)$ and $T_R(t)$ is proposed based on the linear system

resolution method. Consider the developed numerical control input with sampling period T_e in the case when $\nu = 1$. The integration of the simple model (2) between the two sampling instants $(k-1)\,T_e$ and kT_e gives:

$$\begin{aligned} y_k &= y_{k-1} + \int_{(k-1)T_e}^{kT_e} F(t)\,dt + \int_{(k-1)T_e}^{kT_e} \alpha(t)\,u(t - T_R(t)) \\ &= y_{k-1} + \int_{(k-1)T_e}^{kT_e} F(t)\,dt + \left[\int_{(k-1)T_e}^{(k-1)T_e+T_R} \alpha(t)\,dt\right] u_{k-2} \\ &\quad + \left[\int_{(k-1)T_e+T_R}^{kT_e} \alpha(t)\,dt\right] u_{k-1} \end{aligned} \tag{7}$$

Noting that the time delay $T_R < T_e$. Denoting by $\hat{F}_k$, $\hat{\alpha}_k$ and $\hat{T}_{R_k}$ the mean values, *i.e.*, the estimations in the time interval $[(k-1)\,T_e, kT_e]$ of $F(t)$, $\alpha(t)$ and $T_R(t)$, we get the following expression:

$$y_k = y_{k-1} + \hat{F}_k T_e + \hat{T}_{R_k}\hat{\alpha}_{k-2}u_{k-2} + \left(T_e - \hat{T}_{R_k}\right)\hat{\alpha}_{k-1}u_{k-1} \tag{8}$$

In order to estimate the ultra-local model parameters, we represent firstly, the previous relation (8) in the form of linear system defined by (28):

$$Y_k = H_k\theta_k \tag{9}$$

The matrix form of the system (9) is obtained by considering the following notations:

$$Y_k = \frac{y_k - y_{k-1}}{T_e},$$

$$H_k^T = \begin{bmatrix} 1 \\ u_{k-1} \\ u_{k-2} \end{bmatrix},$$

$$\theta_k^T = \left[\hat{F}_k\ \hat{\beta}_{k-1}\ \hat{T}_{R_k}\right],$$

where the second parameter of the vector θ_k is defined by:

$$\hat{\beta}_{k-1} = \left(T_e - \hat{T}_{R_k}\right)\hat{\alpha}_{k-1} \tag{10}$$

Considering that $\hat{\alpha}_{k-2}$ is estimated in the previous step, it remains to estimate the parameter $\hat{\alpha}_{k-1}$ which is obtained by:

$$\hat{\alpha}_{k-1} = \frac{\hat{\beta}_{k-1}}{T_e - \hat{T}_{R_k}} \tag{11}$$

Since the system (9) is consistent, the general expression of the estimation is written as follows:

$$\theta_k = H_k^{\{1\}}Y_k + \left(I_n - H_k^{\{1\}}H_k\right)\Lambda_k \tag{12}$$

where:

- H_k is a matrix of size $(1 \times n)$.
- $H_k^{\{1\}}$ denotes any generalized inverse of H_k, such as $H_k^{\{1\}}$ verifies $H_k = H_k X H_k$ (5);
- Λ_k is an arbitrary vector of size $(n \times 1)$.

Noting that the coefficients of the matrix Λ_k can be used to satisfy other relating constraints to the system control. The main aim of this work is not the parameter identification but to obtain a parameters which satisfying the ultra-local model at each instant t.

4 A thermal process study

4.1 Model description

The thermal process whose simplified diagram is given by the figure 3, is well known and widely studied for the understanding of the automatic concepts such as the identification and development of control laws. It is constituted by a constant volume tube $V\left[m^3\right]$ and a heating resistor $R_c\,[Ohm]$ connected to a direct current power supply $u\,(t)$. The parameter $C\left[J.m^{-3}.^{\circ}K^{-1}\right]$ is the specific heat constant of air. The voltage $u\,(t)$, applied to the resistance, allows to heat the air entering at the tube by Joule effect (22). Indeed, $T_E\,[^{\circ}K]$ is the ambient temperature, and $f_j\left[m^3.s^{-1}\right]$ is the air rate flow entering according to the valve opening angle j. The purpose of the control system is to regulate the temperature $T_S\,[^{\circ}K]$ of the outgoing air at the constant temperature, given that the air flows into the tube with an initial temperature $T_E\,[^{\circ}K]$ and at the flow rate $f_j\left[m^3.s^{-1}\right]$.

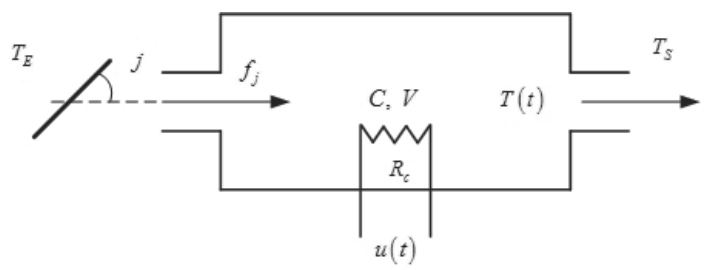

Figure 3 Simplified schema of thermal process (6).

The flow rate signal is assumed to piecewise constant and can be vary by changing the throttle position j. By applying a variation to the amplifier input, two phenomena are noted:

- The heat capacity of the resistor which is an abrupt voltage change translates into a slower evolution of the resistor temperature. This phenomenon is defined by a transfer function of first order characterized by the time constant τ.
- The delay of the temperature measurement due to the distance between the resistor and the thermistor measurement. This phenomenon is reflected by a time delay T_R in the transfer function.

This leads to a first approximation whose the theoretical transfer function of the model is given by (6):

$$H(p) = K\frac{e^{-T_R p}}{1+\tau p} \tag{13}$$

where K is the overall static gain, τ is the time constant and T_R is the time-delay. The numerical parameters values of the considered thermal process, for an ambient temperature equal to $20°C$, are given in the Table 1.

Table 1 Parameter values of considered system (6).

Parameter	**V**alue
K	0.86
τ	0.49 s
T_R	0.27 s

4.2 Simulation results

The principle of the proposed control approach, based on the adaptive Smith predictor, is illustrated in the figure 4. Indeed, the online identification of ultra-local model parameters renders the variable time delay constant in each sampling period in order to be compensated by the adaptive Smith predictor.

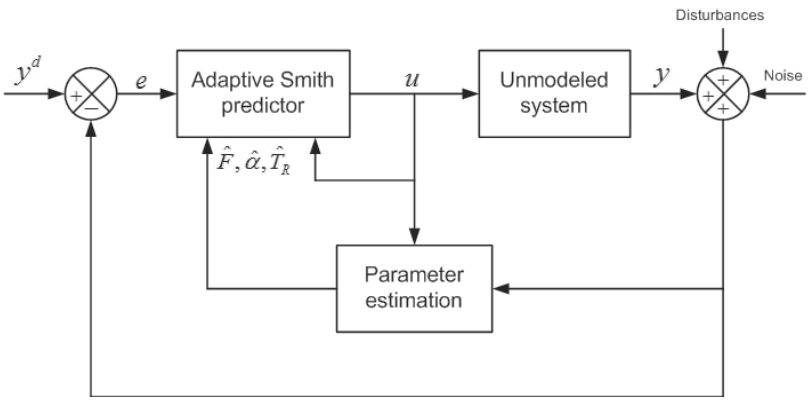

Figure 4 General structure of the proposed ultra-local model control with adaptive Smith predictor.

For the numerical simulations, we choose to generate a desired trajectory $y^d(t)$ satisfying the system constraints, based on the flatness concept (13), (29), (30). This trajectory ensures a transition from $y^d(t_0) = 1.5$ V to $y^d(t_f) = 3.5$ V at the two transition instants $t_0 = 40$ s and $t_f = 90$ s. The desired trajectory is generated by a polynomial of order 5 checking the conditions of derivability and continuity at the transition instants.

For comparison purpose, a Smith predictor control with classical PID is implemented to the considered system. The PID controller parameters, given in the table 2, are tuned by applying the Cohen-Coon method. For the proposed control approach, the gains of adaptive PI controller are determined by a placement of two poles in the functional equation (5) in order to stabilize the tracking error (see Table 2). The proposed control approach is applied to the thermal process in the presence of noise and disturbances.
A centered white noise with variance of 0.001 is added to the system output in order to test the robustness of designed controller. At $t = 120$ s, a disturbance given by the sensor of 0.5 V is applied to the output temperature measurement.

Table 2 Controller parameters.

Gain	**A**daptive PI	**C**lassical PID
K_P	2.5	1.83
K_I	5	3.72
K_D	-	0.2

The simulation results given in the figures 5, 6, 7 and 8 clearly show that the proposed a-PI controller based on the linear system resolution method, provides better performances in significant improvements with respect to those obtained by the classical PID controller. In this case, the system parameter uncertainties is considered in order to test the robustness of the proposed approach. For this reason, the parameter K is dropped by 50% when the time $t > 100$ s. Good performances are obtained in terms of reference trajectory tracking and robustness with respect to external perturbation and noises. These numerical results show that the consequence of the thermal perturbation is smaller and rejected faster by the a-PI controller than the PID one. The good robustness of the developed ultra-local model control approach with respect to the system parameter uncertainties is illustrated by these numerical simulation results. We can see that the effect of parameter uncertainties is more significant in the case of PID controller.

4.3 Algebraic identification method

In order to improve the previously obtained performances, the proposed algebraic method allows to estimate the ultra-local model parameters over a time interval L which must be larger than the sampling period T_e (*i.e.*, $L \geqslant 2T_e$).
One of the main interests of this identification window is to filter the noises. Therefore, the proposed technique principle is based on the mean value calculation of measured data during the identification window L.

Assume that m_{k-1} is the mean value of measurements of y in the interval $[(k-L)\,T_e, (k-1)\,T_e]$, defined by:

$$m_{k-1} = \frac{1}{L} \sum_{i=k-L}^{k-1} y_i \tag{14}$$

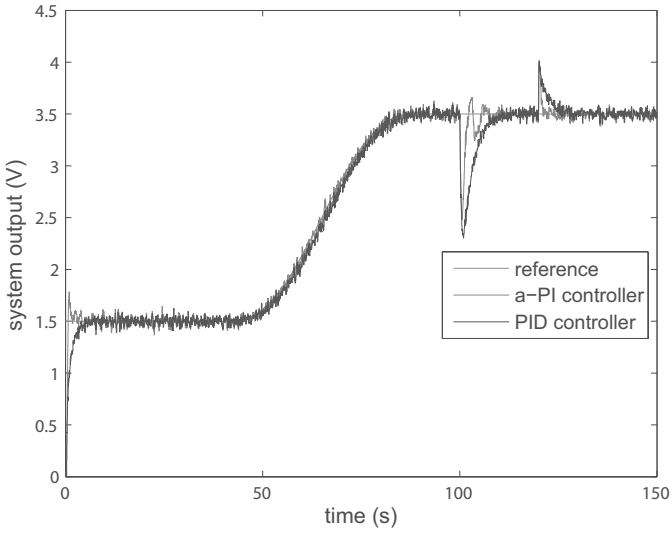

Figure 5 Reference trajectory and noisy system outputs - parameter uncertainties 50% of K.

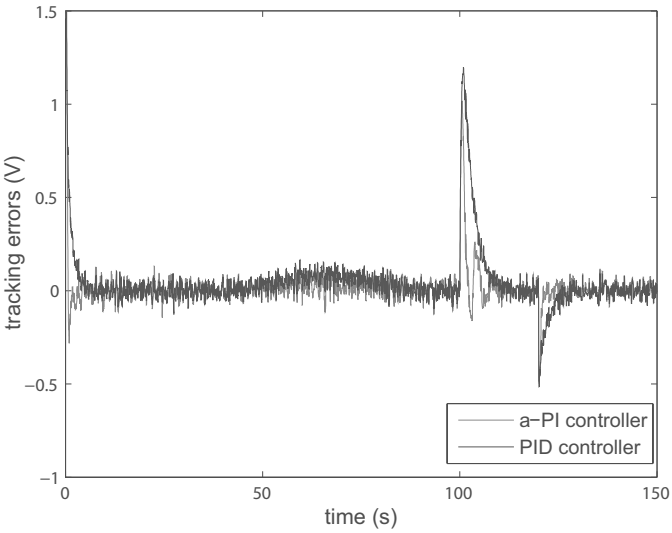

Figure 6 Tracking errors - parameter uncertainties 50% of K.

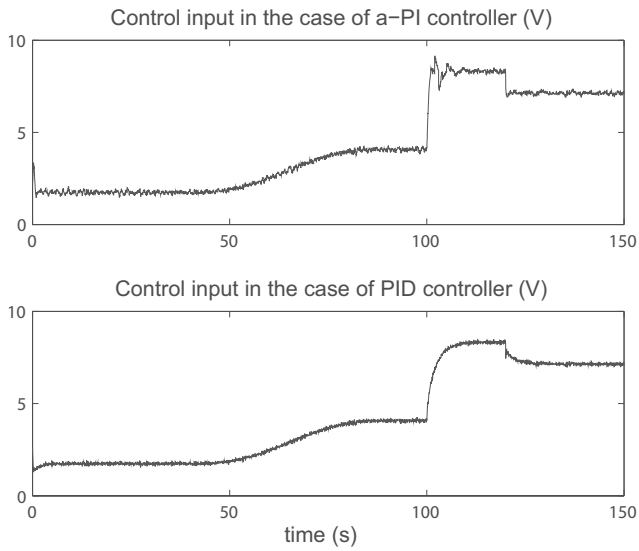

Figure 7 Control inputs - parameter uncertainties 50% of K.

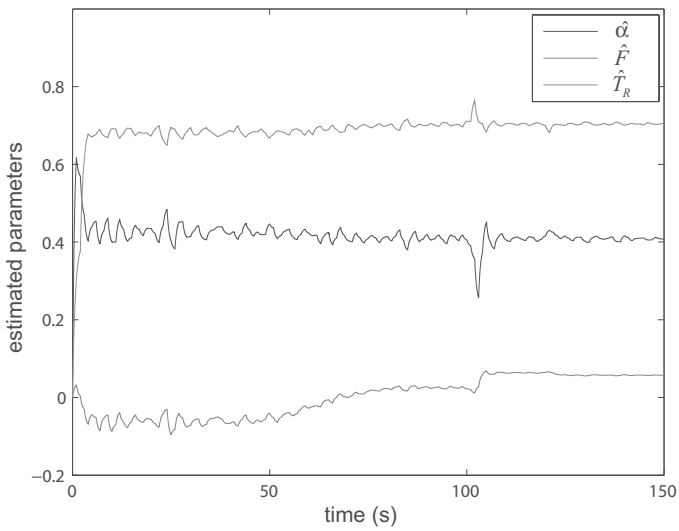

Figure 8 Estimation of parameters $\hat{F}$ (red), $\hat{\alpha}$ (blue) and $\hat{T}_R$ (green) - parameter uncertainties 50% of K.

The setting in the recursive form of the mean value m_{k-1} defined in (14) is written as follows:

$$m_k = m_{k-1} + \frac{1}{L}\left(y_k - m_{k-1}\right) \tag{15}$$

In this case, the estimation of ultra-local model parameters is determined by solving the following linear system:

$$m_k = H_k \theta_k \tag{16}$$

Therefore, the general expression of estimation is written in the following form:

$$\theta_k = H_k^{\{1\}} m_k + \left(I_n - H_k^{\{1\}} H_k\right) \lambda_k \tag{17}$$

The expression (17) allows to obtain a solution set of the system (16). These degrees of freedom provide an improvement of performances and satisfying other optimization constraints.

The simulation results of the proposed algebraic method implementation for the considered system control, are given in the figures 9, 10, 11 and 12. In this case, we have considered a sliding window of size $L = 20$ s and the parameter K is dropped by 50% when $t > 100$ s. The good performances shown by the numerical results, are obtained thanks to the proposed identification method which is based on the mean value calculation of data along of the estimation window. We can observe that the response time becomes faster than that of the system output given in the figure 9. This implies an improvement of obtained performances in terms of robustness with respect to external disturbances and parameter uncertainties.

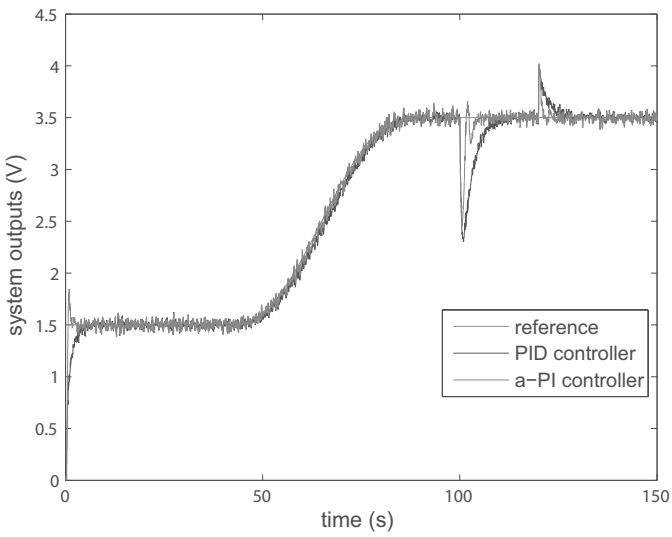

Figure 9 Noisy system outputs - parameter uncertainties 50% of K.

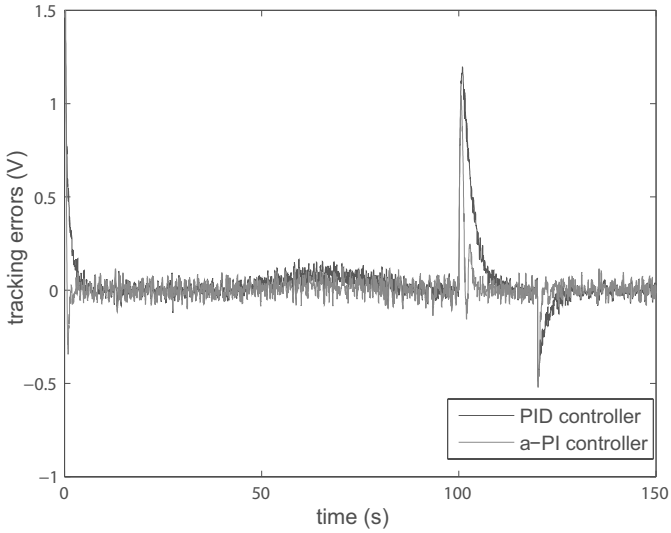

Figure 10 Tracking errors - parameter uncertainties 50% of K.

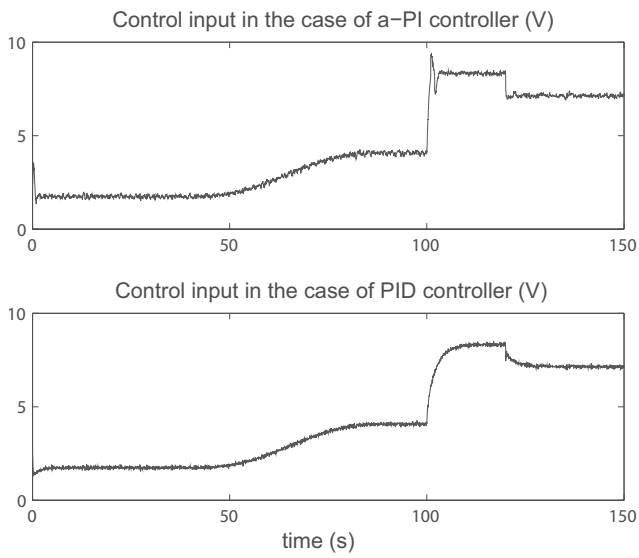

Figure 11 Control inputs - parameter uncertainties 50% of K.

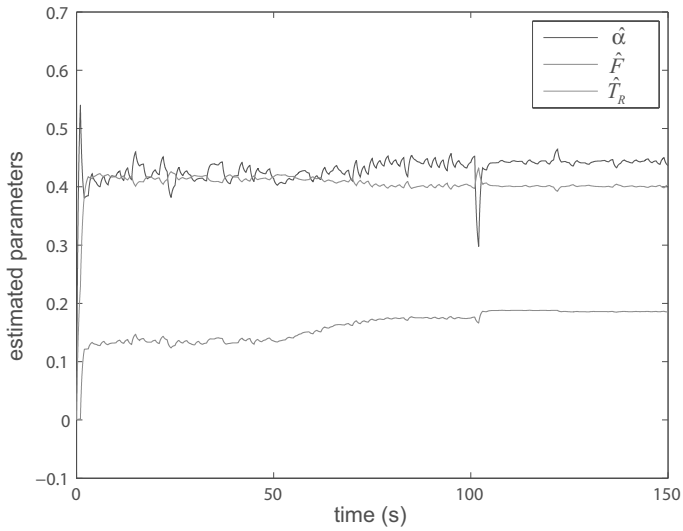

Figure 12 Estimation of parameters $\hat{F}$ (red), $\hat{\alpha}$ (blue) and $\hat{T}_R$ (green) - parameter uncertainties 50% of K.

5 Conclusions

The proposed control strategy has allowed to design an adaptive robust controller able to insure good robustness and trajectory tracking performances even in severe operating conditions. The online estimation of time delay and the design of adaptive Smith predictor present the highlight of this work. Indeed, the adaptive Smith predictor is based on the estimated parameters of the ultra-local model. For this reason, the best benefit of the proposed approach consists of the time delay compensation without requiring to have any knowledge about the system model.

In this paper, the online estimation problem of time delay is solved thanks to the proposed identification method of ultra-local model parameters. The numerical simulation results of the developed control law shows an improvement of robustness performances obtained with respect to the Smith predictor control with classical PID. Moreover, the proposed algebraic method based on the algebraic derivation properties provides better results in terms of robustness with respect to disturbance rejection and parameter uncertainties. Extensions to the identification of time delays in the multivariable systems case using other alternative identification methods are an open problems under investigation.

References

[1] H. Abouaïssa, M. Fliess, V. Iordanova, C. Join (2011) 'Prolégomènes à une régulation sans modèle du trafic autoroutier', *Conférence Méditerranéenne sur l'Ingénierie sûre des Systèmes Complexes, Agadir*.

[2] K.J. Aström, T. Hägglund (2006) 'Advanced PID Controllers' (2nd edition), *Instrument Society of America, Research Triangle Park, North Carolina*.

[3] L. Belkoura, J.-P. Richard, M. Fliess (2006) 'On-line identification of systems with delayed inputs', *16th Conference of Mathematical Theory of Networks & Systems, MTNS 06, Japan*.

[4] L. Belkoura, J.P. Richard, M. Fliess (2009) 'Parameters estimation of systems with delayed and structured entries', *Automatica*, vol. 45, pp. 1117–1125.

[5] A. Ben-Israel, T.N.E. Greville (1974) 'Generalized inverses: theory and applications', *John Wiley and Sons*.

[6] P. Charbonnaud, J-F. Carrilo, S. Médar (2003) 'Robust control reconfiguration of a thermal process with multiple operating modes', *IEEE Transaction of Control Systems Technology*, vol. 11, pp. 529–538.

[7] M. Fliess, C. Join (2008) 'Commande sans modèle et commande à modèle restreint', *e-STA*.

[8] M. Fliess, C. Join (2009) 'Model-free control and intelligent PID controllers: towards a possible trivialization of nonlinear control?', *15th IFAC Symposium on System Identification, SYSID'2009, Saint-Malo*.

[9] M. Fliess, C. Join (2013) 'Model-free control', *International Journal of Control*, vol. 86, pp. 2228–2252.

[10] M. Fliess, C. Join, S. Riachy (2011) 'Revisiting some practical issues in the implementation of model-free control', *18th IFAC World Congress, Milan*.

[11] M. Fliess, C. Join, S. Riachy (2011) 'Rien de plus utile qu'une bonne théorie: la commande sans modèle', *4èmes Journées Doctorales / Journées Nationales MACS, JDJN-MACS'2011, Marseille*.

[12] M. Fliess, C. Join, H. Sira-Ramírez (2008) 'Non-linear estimation is easy', *International Journal of Modelling Identification and Control*, vol. 4, pp. 12–27.

[13] M. Fliess, J. Lévine, P. Martin, P. Rouchon (1995) 'Flatness and defect of non-linear systems: introductory theory and examples', *International Journal of Control*, vol. 61, pp. 1327–1361.

[14] M. Fliess, H. Sira-Ramírez (2003) 'An algebraic framework for linear identification', *ESAIM: Control Optimization and Calculus of Variations*, vol. 9, pp. 151–168.

[15] M. Fliess, H. Sira-Ramírez (2008) 'Closed-loop parametric identification for continuous-time linear systems via new algebraic techniques', *In H. Garnier & L. Wang (Eds): Identification of Continuous-time Models from Sampled Data*.

[16] O. Gomez, Y. Orlov, I. Kolmanovsky (2007) 'On-line identification of SISO linear time-delay systems from output measurements', *Automatica*, vol. 43, pp. 2060–2069.

[17] K. Ibn Taarit, L. Belkoura, M. Ksouri, J.-P. Richard (2011) 'A fast identification algorithm for systems with delayed inputs', *International Journal of Systems Science*, vol. 42, pp. 449–456.

[18] C. Join, G. Robert, M. Fliess (2010) 'Vers une commande sans modèle pour aménagements hydroélectriques en cascade', *6ème Conférence Internationale Francophone d'Automatique, CIFA'2010, Nancy*.

[19] J. Haggège, M. Ayadi, S. Bouallègue, M. Benrejeb (2010) 'Design of Fuzzy Flatness-Based Controller for a DC Drive', *Control and Intelligent Systems*, vol. 38, pp. 164–172.

[20] W.S. Levine (1996) 'The Control Handbook', *Cooperation with IEEE Press, New York*.

[21] J. Marshall (1979) 'Control of time-delay systems', *IEE Control Engineering. Peter Peregrinus Ltd*.

[22] K.S. Narendra, O.A. Driollet, M. Feiler, K. George (2003) 'Adaptive control using multiple models, switching and tuning', *International Journal of Adaptive Control and Signal Processing*, vol. 17, pp. 87–102.

[23] A. O'Dwyer (2009) 'Handbook of PI and PID Controller Tuning Rules' (3rd edition), *Imperial College Press, London*.

[24] A. O'Dwyer (2000) 'Open loop time domain gradient methods for parameter and delay estimation', *In Technical Report, Dublin Institute of Technology, Kevin St., Ireland*.

[25] X. Ren, A. Rad, P. Chan, W. Lo (2005) 'Online identification of continuous-time systems with unknown time delay', *IEEE Transactions on Automatic Control*, vol. 50, pp. 1418–1422.

[26] S. Rezk, C. Join, S. El Asmi (2012) 'Inter-beat (R-R) intervals analysis using a new time delay estimation technique', *20th European Signal Processing Conference, EUSIPCO'2012, Bucarest*.

[27] J-P. Richard (2003) 'Time delay systems: An overview of some recent advances and open problems', *Automatica*, vol. 39, pp. 1667–1694.

[28] F. Rotella, P. Borne (1995) 'Théorie et pratique du calcul matriciel', *Éditions Technip, Paris*.

[29] F. Rotella, I. Zambettakis (2007) 'Commande des systèmes par platitude', *Éditions Techniques de l'ingénieur, S7450*.

[30] H. Sira-Ramírez, S. Agrawal (2004) 'Differentially Flat Systems', *Marcel Dekker, New York*.

[31] H. Sira-Ramírez, C.G. Rodríguez, J.C. Romero, A.L. Juárez (2014) 'Algebraic identification and estimation methods in feedback control systems', *Wiley Series in Dynamics and Control of Electromechanical Systems*.

[32] O.J.M. Smith (1959) 'A controller to overcome dead-time', *ISA Journal*, vol. 6, pp. 28–33.

[33] O.J.M. Smith (1957) 'Closer control of loops with dead time', *Chemical Engineering Progress*, vol. 53, pp. 217–219.

[34] K.K. Tan, T.H. Lee, F.M. Leu (2001) 'Predictive PI versus Smith control for dead-time compensation', *ISA Transaction*, vol. 40, pp. 17–29.

[35] H. Thabet, M. Ayadi, F. Rotella (2016) 'Experimental comparison of new adaptive PI controllers based on the ultra-local model parameter identification', *International Journal of Control, Automation and Systems*, vol. 14, pp. 1–8.

[36] H. Thabet, M. Ayadi, F. Rotella (2014) 'Towards an ultra-local model control of two-tank-system', *International Journal of Dynamics and Control*, vol. 4, pp. 59–66.

[37] H. Thabet, M. Ayadi, F. Rotella (2014) 'Ultra-local model control based on an adaptive observer', *IEEE Conference on Control Applications, Antibes*.

[38] K. Youcef-Toumi, O. Ito (1990) 'A time delay controller for systems with unknown dynamics', *ASME Journal of Dynamic Systems Measurement Control*, vol. 112, pp. 133–142.

[39] Q. Wang, X. Guo, Y. Zhang (2001) 'Direct identification of continous time delay systems from step responses', *Journal of Process Control*, vol. 11, pp. 531–542.

[40] Y. Zhenyu, S. Glen Thane (2013) 'Time-delay system identification using genetic algorithm - Part one: precise FOPDT model estimation', *3rd IFAC International Conference on Intelligent Control and Automation Science, China*, vol. 3, pp. 556–562.