HAL open science

Utility network optimization in eco-industrial parks by a multi-leader follower game methodology

Manuel A. Ramos, Mariona Rocafull, Marianne Boix, Didier Aussel, Ludovic Montastruc, Serge Domenech

To cite this version:

Manuel A. Ramos, Mariona Rocafull, Marianne Boix, Didier Aussel, Ludovic Montastruc, et al.. Utility network optimization in eco-industrial parks by a multi-leader follower game methodology. Computers & Chemical Engineering, 2018, 112, pp.132-153. 10.1016/j.compchemeng.2018.01.024 . hal-01932761

HAL Id: hal-01932761

https://hal.science/hal-01932761v1

Submitted on 23 Nov 2018

HAL is a multi-disciplinary open access archive for the deposit and dissemination of scientific research documents, whether they are published or not. The documents may come from teaching and research institutions in France or abroad, or from public or private research centers.

L'archive ouverte pluridisciplinaire **HAL**, est destinée au dépôt et à la diffusion de documents scientifiques de niveau recherche, publiés ou non, émanant des établissements d'enseignement et de recherche français ou étrangers, des laboratoires publics ou privés.

Open Archive Toulouse Archive Ouverte (OATAO)

OATAO is an open access repository that collects the work of Toulouse researchers and makes it freely available over the web where possible

This is an author's version published in: http://oatao.univ-toulouse.fr/21161

Official URL: https://doi.org/10.1016/B978-0-444-64235-6.50141-8

To cite this version:

Mousqué, Florent and Boix, Marianne and Negny, Stéphane and Montastruc, Ludovic and Genty, Louis and Domenech, Serge *Optimal on-grid hybrid power system for eco-industrial parks planning and influence of geographical position.* (2018) Computer Aided Chemical Engineering, 43. 803-808. ISSN 1570-7946

Any correspondence concerning this service should be sent to the repository administrator: tech-oatao@listes-diff.inp-toulouse.fr

Utility network optimization in eco-industrial parks by a multi-leader follower game methodology

Manuel A. Ramos[a], Mariona Rocafull[a], Marianne Boix[a,*], Didier Aussel[b], Ludovic Montastruc[a], Serge Domenech[a]

[a] *Laboratoire de Génie Chimique, U.M.R. 5503 CNRS/INP/UPS, Université de Toulouse, 4, Allée Emile Monso, Toulouse Cedex 4 31432, France*
[b] *Laboratoire PROMES, UPR CNRS 8521, Université de Perpignan, Via Domitia, Perpignan 66100, France*

A B S T R A C T

A multi-leader-follower game (MLFG) model for the design of the utility network in an eco-industrial park (EIP) is studied and implemented by introducing the concept of an environmental authority. The methodology also considers the flowsheet simulation of each enterprise involved in the EIP in order to obtain utility consumption of each enterprise operating by itself. The approach is validated on a case study of a potential Norwegian EIP. In the latter, multi-leader-single-follower and single-leader-multi-follower game models are studied. Each enterprise's objective is to minimize the total annualized cost, while the EIP authority objective is to minimize the equivalent CO_2 consumption related to utility consumption within the ecopark. The MLFG is transformed into a MOPEC and solved using GAMS® as an NLP. The methodology proposed is proven to be reliable in multi-criteria scenarios compared to traditional multiobjective optimization approaches, providing numerical Nash/Stackelberg equilibrium solutions and specifically in EIP planning and optimization.

1. Introduction

Due to an increasing depletion of natural resources such as fresh water or natural gas, important environmental researches have been developed in the last decades. Process industry is an industrial sector particularly affected by this issue. Indeed, the environmental impact induced by the process industry is linked both to the high volumes involved and to the diversity of toxic products generated along the processing chain.

Consequently, there is a real need for industries to ensure minimum natural resources consumption, while maintaining good production levels. In particular, industrial development is often linked to the use of high volumes of freshwater and other utilities (Boix et al., 2011). In order to work towards global environmental preservation while increasing business success, the concept of industrial ecology has emerged (Frosch and Gallopoulos, 1989). This concept, which is directly linked to sustainable development, aims at engaging separate industries, geographically closed enough, in a collective approach so that exchanges of raw materials, by-products, energy and utilities (Chertow, 2000) are maximized. Indeed, the most widespread manifestations of these kinds of industrial symbiosis are eco-industrial parks (EIP). A definition widely accepted of EIP is "an industrial system of planned materials and energy exchanges that seeks to minimize energy and raw materials use, minimize waste, and build sustainable economic, ecological and social relationships" (Alexander et al., 2000; Montastruc et al., 2013). As it can be highlighted, a basic condition for an EIP to be economically viable is to demonstrate that benefits of each industry involved in it by working collectively is higher than working as a stand-alone facility.

Among the methodologies to planning EIPs in a process-engineering framework, mathematical modeling and optimization is the most practical and most adequate one. Nevertheless, Boix et al. highlighted the lack of studies dealing with optimization in order to design optimal configuration and design of an EIP (Boix et al., 2015). Thus, it is important to develop methodologies able to design or plan an EIP where each industry has a plausible gain compared to the case where they operate individually, by also taking into account environmental concerns. Among EIP design studies, water-using network is the most common type of cooperation modeled in literature (Boix et al., 2015). In this kind of studies, the case is often solved as a water-allocation problem through a superstructure-based model where water has to be distributed, treated and discharged in an optimal way between the process units of each enterprise involved in the EIP.

An interesting option to plan EIP consists in modeling the problem in a bi-level program according to the concept of game theory.

Nomenclature

Latin symbols

$np =$	number of processes per enterprise
$P =$	index set of processes
$nep =$	number of enterprises
$EP =$	index set of enterprises
$nu =$	number of enterprises
$U =$	index set of utilities
$Rut =$	required utility
$Gut =$	generated utility
$Ud =$	utility requirement
$Up =$	utility flow between processes
$Uf =$	fresh utility flow
$Udis =$	utility flow to the discharge
$f_{utot} =$	total CO_2 equivalent mass flow
$C^{tot} =$	annualized operating cost of enterprises
$x =$	decision variables of the authority
$y =$	decision variables of the enterprises
$g =$	inequality constraints of the authority
$m =$	equality constraints of enterprises
$l =$	inequality constraints of enterprises

Acronyms

AWH	annual enterprises operating hours
EIP	eco-industrial park
HPS	high pressure steam
KKT	Karush–Kuhn–Tucker
LPS	low pressure steam
MPCC	mathematical programs with complementarity constraints
MLSFG	multi-leader single follower game
SLMFG	single leader multi-follower game

Greek symbols

$\alpha =$	fresh utility cost
$\rho =$	CO_2 equivalent emission rate
$\beta =$	Recycled utility pumping cost

The problem of EIP planning may constitute a leader-follower game where each participant has their own decision variables and antagonistic objective functions (usually the cost of the company). To the best of our knowledge, there is no study dealing for the optimization of a utility network through a game theory modeling. We propose to develop a single leader – multiple followers methodology based on our previous study about game theory approach devoted to the design of water networks (Ramos et al., 2015). Hence, the main novelties of this study are:

- Although bi-level modeling frameworks such as SLMF and MLSF have been already explored and developed in various research domains, the novelty of this work is to apprehend how to formulate and to apply these concepts to an EIP. Here, we propose an integrated approach to optimally plan a utility network in an eco-industrial park through a bi-level program that allows discrete decisions: a heat exchange between two unit operations exists or does not exist.
- To apply this whole methodology, the granularity of the modeling is crucial and we propose the utilization of advanced process engineering tools such as a flowsheeting simulation software combined to optimization tools and game theory concepts to overcome this difficulty.
- The EIP is modeled with a SLMF approach where a Stackelberg game (von Stackelberg, 2010) between an environmental authority and the different companies of the park is involved whereas a Nash game operates at the lower level between companies. Another novelty of this work is then to propose a comparison between different formulations: SLMF versus MLSF, where the opposite structure is modeled.

2. Previous studies

In the majority of studies, taking process data as a starting point, water-sharing networks between industries/enterprises are planned using linear programming (LP) or mixed-integer linear programming (MILP) models. Furthermore, it is widely known that EIP planning entails the formulation of several objective functions, given that there is completely different interests in play e.g. environmental objectives, enterprises gain and resource consumption (Boix et al., 2012; Chew et al., 2011; El-Halwagi, 1997; Lovelady and El-Halwagi, 2009; Rubio-Castro et al., 2012; Tan and Aviso, 2012). Other studies deal with the energetic integration in EIPs (Chae et al., 2010) or by taking into account simultaneously water and energy integration, following also a multi-objective optimization framework (Fichtner et al., 2004). More recently, Nair et al., (2016) developed a methodology for inter-plant heat integration in an EIP. These authors also proposed to apportion the different costs of participating enterprises. Another recent study dealt with the optimal allocation of renewable energy sources in an EIP with an MILP optimization model (Theo et al., 2016). Moreover, very few studies deal also with raw material/products sharing in EIPs (Kantor et al., 2015).

On the other hand, regarding modeling and optimization methods, different recent studies deal with advanced decision-making techniques based on optimization in order to deal with the design of EIPs, staying based on the water-sharing network design (Chew et al., 2009) developed a game theory approach for the decision making process for water integration in an EIP. Nevertheless, the game theory approach was employed *a posteriori*, i.e. in the decision making process after the optimization step. In this study, different configurations of EIP's are obtained by classical optimization and then, the different integration schemes were evaluated regarding Nash equilibrium. Secondly, Aviso et al. (2010) developed a single-leader multi-follower game (SLMFG) model with fuzzy optimization in order to model water exchange in EIP. The methodology is then evaluated in a medium-sized case study and under different scenarios. Finally, Ramos et al.(2016) developed an alternative methodology to multi-criteria optimization generally used in the field of process engineering, by applying the methodology in an industrial ecology context (water networks), by using multi-leader-follower game (MLFG) models due to the introduction of an EIP authority in the model. The latter research compared the obtained results with traditional multi-objective optimization results and proved that the proposed game theory model methodology was indeed more effective than traditional multi-objective/multi-decision optimization methods, e.g. goal programming. Andiappan et al. (2016) also demonstrated a framework that couples a cooperative game model with a stability analysis (Maali, 2009) and a stability criterion (Wang et al., 2013). Their work allows proposing a cost-optimal network by satisfying the stability of raw material costs.

Besides previous works about optimization of EIP's, we can find numerous works related to the application of bi-level programs applied to other fields. Game theory concepts have been largely developed and applied to drinkable water network designs (Peldschus and Zavadaskas, 2005), and to the design of deregulated electricity markets (Aussel et al., 2016). Moreover, supply chain design constitutes an important subject where Stackelberg leader-follower game has been widely applied. Indeed, Chen et al. (2017) investigated the effects of a dual-channel supply chain coordinated by the retailer's margin profit on the supply chain's profit through a Stackelberg equilibrium. Similarly,

Feng et al. (2017) explored the effects of introducing contracts in such a supply chain. Yue and You (2014) have also differently modeled the supply chain structure through a generalized Nash equilibrium between supplier and customer with the development of a single leader-multiple follower model based on generalized Nash equilibrium of multi-echelon supply chain design. Regarding multiple leader single follower models, one can cite Ang et al. (2013) who developed a model where n suppliers (leaders) compete to provide a product to one manufacturer (follower).In this study, the leaders game is a generalized Nash equilibrium. More recently, Yue and You (2017) developed a bi-level program to optimally design an integrated forestry and a biofuel supply chain involving a Stackelberg game between a forestry company and a pulp and paper mill, by using a single leader – single follower ~~under~~ Stackelberg game. Hjaila et al. (2017) also explored the game theory approach by developing a non-cooperative Stackelberg game between several enterprises in a supply chain under a competitive uncertain environment. Finally, Gao and You (2017a, 2017b) proposed a two-players Stackelberg approach, mixed with a multiobjective technique to model and solve a Shale gas supply chain.

All the aforementioned studies show that a MLFG model is a very reliable method to accomplish the design of complex systems involving multiple participants. We found it relevant to explore an energy network for the planning of an EIP in this context. Indeed, the approach has several demonstrated advantages when compared to traditional approaches and introduces the concept of environmental authority in an EIP context. On the other hand, very few studies deal with utility integration in EIPs. In this work, an optimal utility network planning is addressed by using both MLSFG and SLMFG models. In addition, a general methodology is introduced in order to further expand on the game theory approaches in EIPs. This work focuses also on the importance of process engineering in the process of EIP planning and integration, by implementing process simulation in order to obtain process utility consumption data for the aforementioned model.

3. Methodology

In order to successfully design EIP using the methodology proposed in this work, several assumptions and aspects have to be taken into account.

First of all, it is clear that the enterprises involved have to be in feasible geographical vicinity, in order to make matter or energy exchanges directly (to make piping viable). This, as being the main idea behind an EIP, has as consequence that supply chain models are not included (at least in the present) in its conception and planning. For this application, the aim is to model exchanges between unit operations in the same company and simultaneously to exchanges of energy between companies. Thus, the modeling scale is chosen to be at the level of unit operations in order to be able to model all the types of exchanges. Finally, it is very important to note that the vital idea behind EIPs is the more sustainable operation of industries, i.e. minimization of natural resources consumption, by providing a significant economic benefit to the participating enterprises. Consequently, EIP optimization models are far from being single-objective classical optimization problems. Zhang et al. (2008) provided a general procedure to early planning and design of an EIP. In the present work, we center our approach on a combination of modern engineering tools, such as process modeling, simulation, mathematical modeling and optimization.

3.1. General approach

Given the aforementioned assumptions, the proposed methodology is as follows:

The following steps to follow the methodology developed in Fig. 1 are detailed in a chronologic order so that every operator can apply it. The aim is that the participating enterprises give available data to the authority of the park which is represented by a design and planning operator guarantying the confidentiality of the given data and proposing the final exchanges solution of the EIP to the potential companies.

I. **Relevant operating conditions procurement and analysis.** First, individual operating parameters, process conditions and constraints should be obtained for all enterprises potentially participating. This is indeed the crucial step in EIP design, since the scale of modeling depends from it; e.g., each independent enterprise can be seen as a whole where raw material is transformed into a product, or instead, emphasis could be made in each unit operation which constitutes the whole enterprise. Moreover, even rigorous models of unit operations could be considered, in a very large-scale modeling. However, this is very impractical since the latter models are very difficult to solve and are very-large scale in size. It is evident that these levels of modeling change completely the nature of the EIP planning. Thus, it is critical to analyze and classify data provided by enterprises (if it is the case) in order to define beforehand the modeling scale. If data is not provided by enterprises, flowsheeting and simulation should be completed in order to obtain relevant operating conditions of streams and unit operations. This is accomplished by rigorously simulating all processes unit operations, based on the complete flowsheet defined by each enterprise. In this way, process operating conditions and requirements i.e. energy and raw material can be obtained in a reliable way. On the other hand, it is a plus to accomplish individual optimization of each flowsheet and energy integration to obtain more advanced data. Process simulation software plays a crucial role in this step.

II. **Type of network definition**. With all process data and operating conditions obtained from the step before, it is subsequently needed to conceive a network suitable for exchanges in the EIP. In other words, it is about establishing potential networks of raw material, waste or energy that may benefit the entire EIP, by highlighting potential sources and potential sinks. Examples include water-contaminant networks (Boix et al., 2012), simultaneous heat and water networks (Boix et al., 2011) and utility networks (this work). Once defined, it follows the calculation of additional data needed in order to better understand the potential exchanges. A sensitivity analysis may be also pertinent at this step.

III. **Define a mathematical model for the aforementioned selected network**. Indeed, this step is crucial for the subsequent steps, since it is at this point where the modeling scale comes into play. Here, several modeling scales may be chosen, depending on the degree of detail desired. On the other hand, as the degree of detail increases, the larger the scale of the model and in consequence more difficult to solve. We propose a *grey box* approach, where each process of each enterprise has already fixed operating parameters obtained from step I. Moreover, the types of models considered in network optimization in general are often mixed-integer, linear, MILP, or non-linear MINLP problem, which increases the difficulty of the model. As such, very detailed models such as rigorous thermodynamic, kinetic, equilibrium models of unit operations should be avoided. Superstructure-type models are preferred at this stage, where all interconnections between processes are possible (Yeomans and Grossmann, 1999). It is important to define at this point design constraints for the network, in order to accomplish a feasible design of the EIP, e.g. minimum flowrates

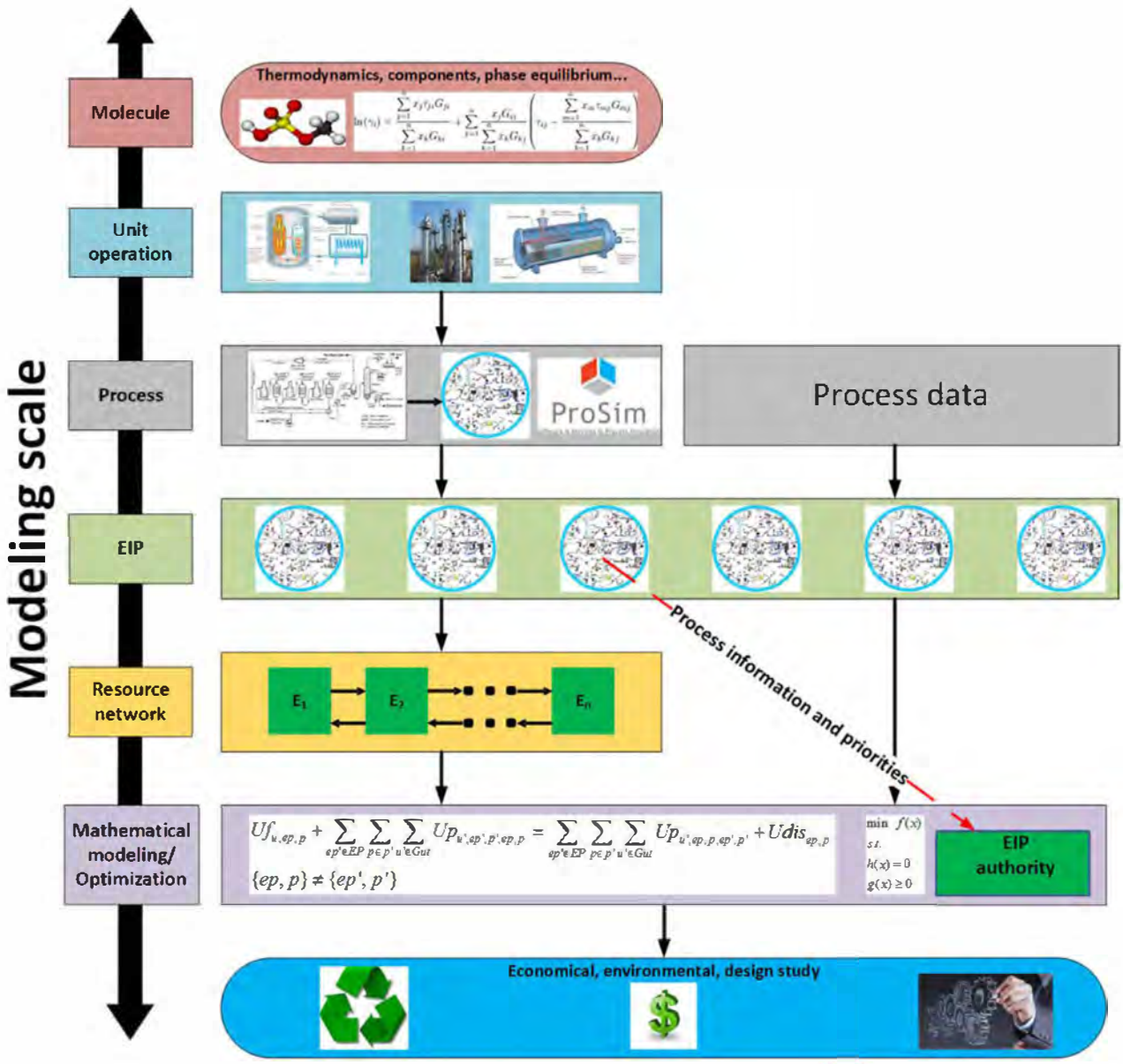

Fig. 1. General methodology.

between processes (Ramos et al., 2016) and minimum heat exchanger transfer area (Boix et al., 2011).

IV. **Solve each individual enterprise problem**. First, each single-objective optimization of each enterprise is accomplished by minimizing their operating and/or capital costs. These results will provide important data prior to the results of the EIP optimization problem and will be used to compare the latter obtained results.

V. **EIP Solution methodology**. At this point, the optimization model is already defined. On the other hand, it is critical to point out that, as aforementioned, EIP optimization problems are multi-criteria, or multi-objective optimization problems. As such, this kind of problems could be solved by advanced decision-making tools as multi-objective optimization methods (Ramos et al., 2014) or as in the present work, by using the concept of *EIP regulator* introduced by Ramos et al. (2016) in the context of EIPs and using game theory optimization models such as multi-leader single-follower game (MLSFG) or single-leader multi-follower game (SLMFG) formulations. The latter formulations are very useful in the context of EIP conception and planning, since it successfully describes the distinction between different levels of modeling, i.e. environmental objective functions and enterprises profit objective functions, as demonstrated by Ramos et al. (2016). Let us note that additional modeling takes place by adapting the EIP model to these game theory models approach. A suitable solution method has to be selected as well.

The question of the acceptance of the proposed solution/equilibria is an important one. The answer is intrinsically included into the MLSF and SLMF game approaches. Indeed the enterprises will accept the proposed solution for two reasons:

- On one hand, each enterprise will have a positive gain compared to the stand-alone situation,
- On the other hand if one enterprise decides to change unilaterally the values of its variables, proposed by the designer, it will either loose or at best equalize its cost of production. Moreover, since their interactions are by

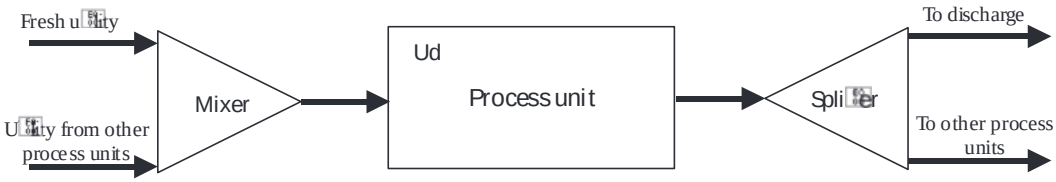

Fig. 2. General view of the superstructure for the utility network problem.

hypothesis non-cooperative, its decision must be unilateral.

VI. **Post-optimal analysis.** When results are obtained, deep analysis leads to the understanding and the consequences of the EIP resource-sharing network. Note that sustainability objectives must be achieved as well as positive relative gains of each enterprise regarding the case where they operate outside the EIP framework. If one or several enterprises do not achieve expected profits, then it is crucial to analyze the possible causes and if possible, provide some changes to the model in order to obtain significant profit values.

As aforementioned, this work will emphasize on the conception and planning of an EIP utility network. Next, we will describe specifically the methodology of the present work.

3.2. Mathematical modeling

According to the methodology described earlier, simulations of the enterprises potentially participating in the EIP were accomplished by using the process simulation software ProSim Plus®. With the process operating conditions obtained, we proceeded to analyze the potential sources and sinks of utility-sharing as well as to select adequate potential utilities which fit into the studied processes. Required mass flows of utilities are calculated for each heat-intensive unit operation.

Subsequently, the optimization model of the EIP is defined and the solution methodology is described in detail.

3.2.1. EIP utility network model statement

The utility network formulated in this work consists mainly in mass balances and utility demand for each process. The concept behind the modeling is the concept of superstructure, where all potential connections between processes are considered. In the first place, let us consider that heat exchangers are considered as the unit operations/processes participating in the utility network, but for the sake of generality let us refer to processes instead. Fig. 2 illustrates the general concept of superstructure in the utility network modeling proposed in this work.

From a given number of process units, all possible connections between them may exist, except recycling utilities directly to the same unit. This constraint forbids self-recycles since in utility networks it has no usefulness whatsoever. For each utility using process, input utility might be fresh and/or recycled utility from other processes in order to fulfill utility requirement constraints. Equivalently, output utility from a process may be directly discharged and/or distributed to another suitable process.

Mathematically speaking, let np denote the given number of processes per enterprise, $P = \{1, 2, ..., np\}$ denote the index set of processes, and let nep denote the given number of enterprises in the EIP, $EP = \{1, 2, ..., nep\}$ denote the index set of enterprises; let nu denote the total number of utilities considered, $U = \{1, ..., nu\}$ denote the index set of utilities. Additionally, let $Rut(ut, ep, p)$and $Gut(ut, ep, p)$ be the respective subsets of the required and generated utility of each process $p \in P$ of enterprise$ep \in EP$. Each process $p \in P$ of each enterprise $ep \in EP$ has a given requirement of utility, denoted by $Ud_{u,\,ep,\,p}$. In terms of variables, each process of each enterprise $p \in P, ep \in EP$ sends utility u to process $p' \in P$ of enterprise $ep' \in EP, \{ep',\ p'\} \neq \{ep,\ p\}$, taken into account by variable $Up_{u,ep,p,ep',p'}$, receives utility u, denoted by variable $Up_{u,ep',p',ep,p}$ and has an inlet flow of fresh utility, denoted by $Uf_{u,\,ep,\,p}$. Also, it may send an utility flow directly to the discharge, denoted by $Udis_{ep,\,p}$. Remark that it is possible to develop a different kind of model, by taking into account minimum flowrate allowed between processes. However, such a model would introduce discrete decisions into the model, which in a context of MLSFG/SLMFG models would be rather inconvenient to handle.

Given the aforementioned notation, the model statement is as follows:

- **Constraints.**
  - *Utility mass balance around a process unit $p \in P$ of an enterprise $ep \in EP$of required utility $u \in Rut$:*

$$Uf_{u,ep,p} + \sum_{ep' \in EP}\sum_{p \in p'}\sum_{u' \in Gut} Up_{u',ep',p',ep,p} = \sum_{ep' \in EP}\sum_{p \in p'}\sum_{u' \in Gut} Up_{u',ep,p,ep',p'} + Udis_{ep,p}$$
$$\forall ep \in EP,\ p \in P,\ u \in Rut,\ \{ep,\ p\} \neq \{ep',\ p'\} \tag{1}$$

  - *Utility requirements around a process unit $p \in P$ of an enterprise $ep \in EP$of required utility $u \in Rut$:*

$$Uf_{u,ep,p} + \sum_{ep' \in EP}\sum_{p \in p'}\sum_{u' \in Gut} Up_{u',ep',p',ep,p} = Ud_{u,ep,p}$$
$$\forall ep \in EP,\ p \in P,\ u \in Rut,\ \{ep,\ p\} \neq \{ep',\ p'\} \tag{2}$$

  - *Flow Positivity:*

$$Uf_{u,ep,p} \geq 0,\ \ \forall u \in U,\ ep \in EP,\ p \in P \tag{3}$$

$$Up_{u,ep,p,ep',p'} \geq 0, \forall u \in U,\ \{ep, ep'\} \in EP,\ \{p,\ p'\} \in P$$
$$\{ep,\ p\} \neq \{ep',\ p'\} \tag{4}$$

$$Ud_{ep,p} \geq 0,\ \ ep \in EP,\ p \in P \tag{5}$$

- **Objective functions.**

For this kind of problem, let us define the following potential objective functions, which have been defined in previous similar studies (Boix et al., 2011; Kantor et al., 2015; Ramos et al., 2014) . In fact, these objective functions play a role on the regulator design of EIPs. The objective functions are divided in two, namely the environmental objective function (Eq. (6)) and the objective function of each one of the enterprises, i.e. annualized utility cost (Eq. (7)). Note that the environmental objective function may be defined as a simple minimization of fresh resource consumption, but then the difference between different utility resources and their individual impact on the environment would not be taken into account. Nonetheless, in other studies (Boix et al., 2011; Ramos et al., 2014, 2016) minimizing freshwater consumption is a valid environmental objective function, since only one resource is taken into account.

$$f_{uttot} = \sum_{ep \in EP} \sum_{p \in P} \sum_{u \in Rut} \rho_u U f_{u,ep,p} \tag{6}$$

$$C_{ep}^{tot} = AWH \left[\alpha \sum_{p \in P} \sum_{u \in Rut} U f_{u,ep,p} + \beta \sum_{p \in P} \sum_{p' \in P} \sum_{u \in Gut} U p_{u,ep,p,ep,p'} + \frac{\beta}{2} \sum_{ep' \in EP} \sum_{p \in P} \sum_{p' \in P} \sum_{u \in Gut} U p_{u,ep,p,ep',p'} + U p_{u,ep',p',ep,p} \right]$$

$$\{ep, p\} \neq \{ep', p'\} \tag{7}$$

In, Eq. (6) ρ_u represents the CO_2 emission rate of each utility $u \in U$, and in Eq. (7) *AWH* stands for annual enterprise operating hours, α stands for the purchase price of fresh utility, and β for the cost of pumping recycled utility from one process to another. Indeed, each enterprise pays the cost of pumping utility flow both to a process and from a process. Remark that each enterprise pays the totality of the cost associated with utility pumping between their own processes, and regarding utility shared with and from other enterprises the cost is shared between enterprises (i.e. $\frac{\beta}{2}$). A previous study (Ramos et al., 2016) has demonstrated that for water treatment unit, when the cost is shared by enterprises, it enhances the inter-plant exchanges. In this study, we have chosen this work hypothesis even if it is applied for energy utility in order to promote the exchange between the companies and also to create a network between the different companies. Indeed, in a recent study, we found that this choice might enhance shares and exchanges in the EIP context. Let us notice that it could be possible to involve more complex interactions between companies such as signing contracts or price negotiations but these challenges are beyond the scope of this paper. Remark that the model stated is linear in its totality (LP). As aforementioned, a more complex model could be studied, but for the sake of generality and in order to focus on the general methodology these kind of models are here avoided. Finally, note that the sum of utilities was chosen as the environmental objective function, even if utilities are of different types. This simplification avoids creating more complicated models where utilities are considered disaggregated, such as multi-leader multi-follower game formulations. Each enterprise stand-alone model formulation is presented next:

$$\begin{aligned} &\min \quad C_{ep}^{tot} \\ &s.t. \\ &Eq.1 - Eq.7 \\ &U p_{u,ep,p,ep',p} = 0, \ \forall u \in U, ep \neq ep' \in EP, p, p' \in P \end{aligned} \tag{P1}$$

Note that the last constraint in P1 forbids utility sharing between enterprises.

In the following section, the regulator approach (i.e. MLSFG and SLMFG) to utility networks in EIPs is presented in detail, and the case study is introduced.

3.2.2. MLSFG and SLMFG optimization models approach

In order to obtain a solution for the kind of systems as EIPs are, where heavy interactions exist and where each entity is naturally biased by its own interest, game theory is a viable tool for decision-making. As aforementioned, in Nash games, players make simultaneous optimal decisions given the optimal strategies of other players. Indeed, Nash equilibrium denotes the state where all the casual forces internal to the system balance each other out (Lou et al., 2004), and no player can improve its gain by unilaterally changing his strategy. By solving a Nash game, it is possible to obtain this kind of solution as demonstrated by Ramos et al. (2016).

The introduction of an authority/regulator to the design of viable utility networks in EIPs is an interesting alternative to overcome the confidentiality problem on one hand, and on the other hand, to solve the problem of equilibrium benefits of the players involved (Ramos et al., 2016). In fact, the latter can be modeled as a MLSFG where the leaders are the enterprises whereas the EIP authority represents the only – and common - follower (and environmental concerns) or as a SLMFG, when the roles are inversed. Thus, Nash equilibrium exists among players which are in the same level, whereas Stackelberg equilibrium represents the relationship between different levels. The choice between these different formulations depends on the priorities of the EIP, namely environmental and economic aspects.

The introduction, in the model, of a designer/manager of the EIP can appear to be quite costly, in terms of complexity of the model as well as in terms of the computation effort to solve it, especially compared to a centralized model with only one (multi-objective) optimization problem. Our aim in this work in not just to consider a new model but also to propose a more realistic description of the EIP. Indeed the MLFG allows taking precisely into account two essential features of the interrelations between the different actors of the EIP:

- First, the companies are normally behaving between them in a non-cooperative way, especially if they are acting in the same industrial sector. Thus, they have no reason to share data between them and this non-cooperative behaviour is perfectly captured by the Nash equilibrium concept that we used to describe their interactions.
- On the other hand, in order to be able to compute an optimal planning of the EIP, minimizing the environmental impact and reducing the production costs of the companies, some data of the companies are mandatory (volume of wastes, rate of pollution..). It is why the concept of common designer/manager of the EIP plays a central role in our model. Indeed, the data collected by him are not known by the other companies.

At this point, it is important to note that in this approach the choice of leaders and followers is crucial in the problem formulation, as it is explained in detail by Ramos et al. (2016) in terms of mathematical modeling and results. On one hand, it can be assumed that enterprises act as followers and the authority as the lone leader (SLMFG) or vice-versa (MLSFG). It is assumed that in the case of SLMFG enterprises aim to minimize their utility annualized cost, given the minimum CO_2 emissions caused by fresh utility consumption in the EIP, determined by the authority. A general scheme of the SLMFG proposed is shown in Fig. 3. As an environmental objective, an important life cycle indicator has been chosen following the study published in Escape (Boix et al., 2017). The GHG emissions are the most important contributor to the main mid-impact categories such as global warming.

On the other hand, the game may be formulated as a MLSFG, where the EIP authority aims to minimize CO_2 emissions caused by fresh utility consumption, given the recycle and reuse of utilities inside each enterprise and between different enterprises, which minimizes their individual utility costs. A general scheme of the MLSFG proposed is shown in Fig. 4.

By changing the nature of the game as stated above, the priorities of the EIP are shifted. Indeed, in the latter case enterprises utility cost is predominant compared to CO_2 emissions caused by fresh utility consumption and vice-versa in the former case. In fact, in the MLSFG CO_2 emissions are minimized only after each enterprise utility cost is minimized following the Nash game between the leaders and vice versa. In consequence, it is self-understood that priorities have to be carefully chosen by the modeler or may be self-imposed by the problem. Given the latter structures, we now proceed to formally present each one of the game formulations following Ramos et al. (2016).

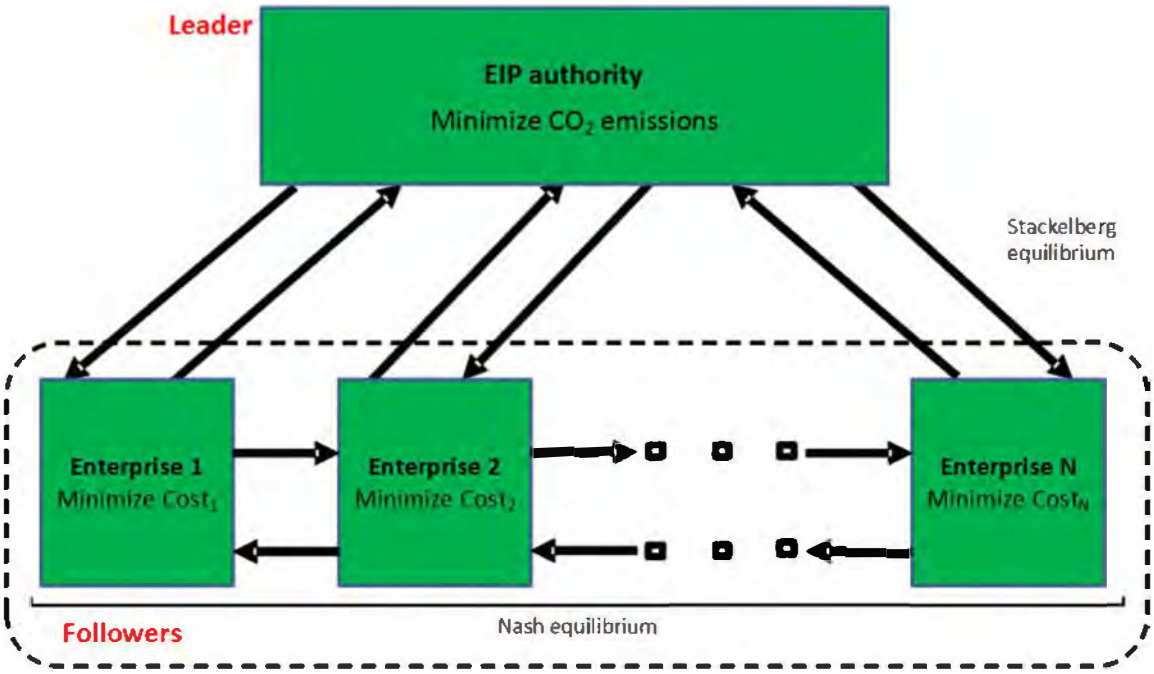

Fig. 3. General scheme of the proposed SLMFG formulation.

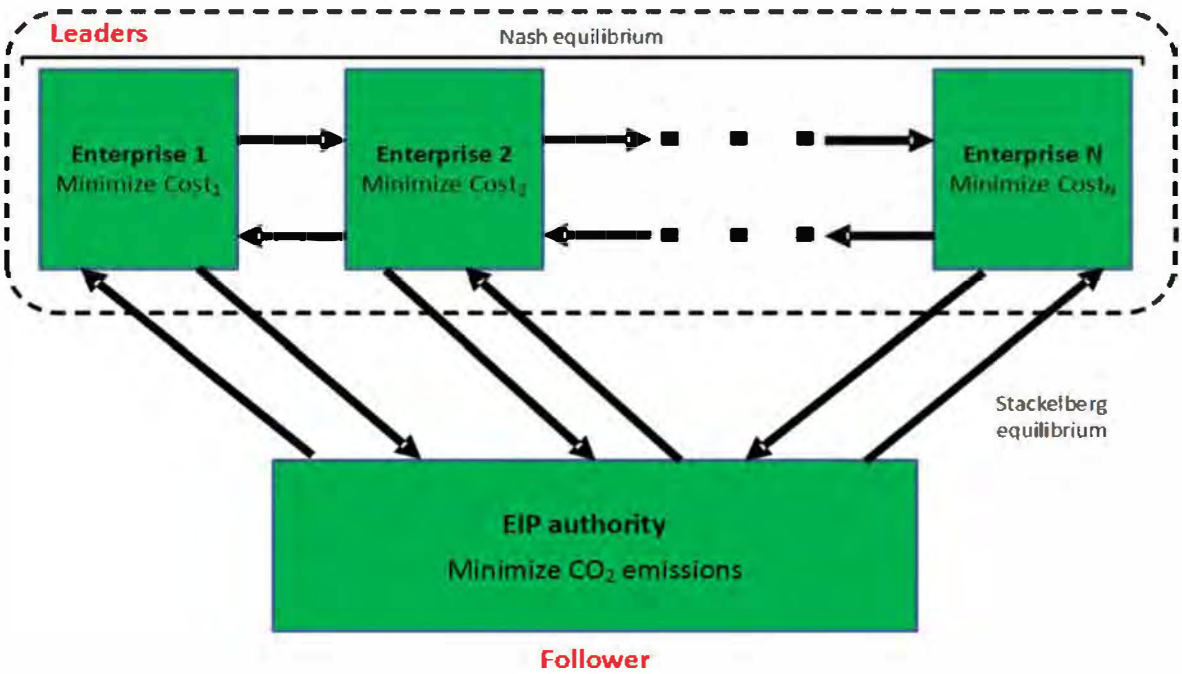

Fig. 4. General scheme of the proposed MLSFG formulation.

For the sake of clarity, it is defined:

$$\begin{aligned} Uf &= (Uf_{u,ep,p} : 1 \le u \le nu, 1 \le ep \le nep, 1 \le p \le np) \\ Up_{ep} &= (Up_{u,ep,p,ep',p'} : 1 \le u \le nu, 1 \le ep' \le nep, 1 \le p, p' \\ &\quad \le np, \{ep, p\} \neq \{ep', p'\}) \\ Udis &= (Udis_{ep,p} : 1 \le ep \le nep, 1 \le p \le np) \end{aligned} \tag{8}$$

Additionally, by grouping authority variables in x and each enterprise variables in y_{ep}, we obtain:

$$\begin{aligned} x &= (Uf, Udis) \\ y_{ep} &= (Up_{ep}), \ \forall ep \in EP \end{aligned} \tag{9}$$

Table 1
Interactions between participants and variables in the different problems.

		Variables
SLMF (following the definitions in Eqs. (8) and (9)	Leader	*Uf, Udis*
	Follower	Up_{ep}, $\forall ep \in EP$
MLSF (following the definitions in Eqs. (8) and (9)	Leader	Up_{ep}, $\forall ep \in EP$
	Follower	*Uf, Udis*

Table 1 sums up what are the different entities controlling each variable in the SLMF/MLSF formulations of the problem.

Evidently, each enterprise controls their own flows to their own process as well as for other enterprises' processes, while the authority controls the flow of fresh utilities to each process of all enterprises and their discharge flow.

In the same way, constraints are grouped in the following way either for the SLMFG and MLSFG formulations:

$$\begin{aligned} g(x,y) &= \{Eq.3, Eq.5\} \\ l_{ep}(x, y_{ep}, y_{-ep}) &= \{Eq.1, Eq.2\} \\ m_{ep}(y_{ep}, y_{-ep}) &= \{Eq.4\} \end{aligned} \tag{10}$$

With the aforementioned notation, the corresponding bi-level formulation of the SLMFG is illustrated in P2.

$$\begin{aligned} \min_{\substack{x \\ y}} \quad & f_{uttot}(x) \\ s.t. \quad & \left\{ \begin{array}{l} g(x,y) \\ y_{ep},\ \forall ep \in EP\ solves\ : \\ \min\limits_{y_{ep}} \quad C_{ep}^{tot}(x, y, y_{-ep}) \\ \quad s.t. \quad l_{ep}(x, y_{ep}, y_{-ep}) \\ \qquad\quad m_{ep}(y_{ep}, y_{-ep}) \end{array} \right\} \quad (\mathrm{PF}_{ep}) \end{aligned} \tag{P2}$$

On the other side, the formal bi-level definition of the MLSFG formulation is illustrated in P3, for each enterprise $ep \in EP$.

$$\begin{aligned} \min_{\substack{x \\ y_{ep}}} \quad & C_{ep}^{tot}(x, y, y_{-ep}) \\ s.t. \quad & \left\{ \begin{array}{l} m_{ep}(y_{ep}, y_{-ep}) \\ x\ solves\ : \\ \min\limits_{x} \quad f_{uttot}(x) \\ \quad s.t. \quad l_{ep}(x, y_{ep}, y_{-ep}),\ \forall ep \in EP \\ \qquad\quad g(x,y) \end{array} \right\} \quad (\mathrm{PF}) \end{aligned} \tag{P3}$$

As can be seen from P2 and P3 constraints where variables controlled by the follower appear are always part of the follower(s) problem, which at the same time is/are a constraint of the leader(s) problem. Note that the notation y_{-ep} is a common notation in this type of formulations, which represents the variables of other players (either leaders or followers) at the same decision level.

Let us immediately emphasize the important difference of "optimal solution" that both SLMF and MLSF formulations carry:

- In the case of SLMF game, the designer "choose", by solving it leader's problem, the Nash equilibrium between the enterprises that minimizes the environmental impact.
- An "optimal solution" of the MLSF formulation is a Nash equilibrium $y = (y_1, \ldots y_n)$ between the leaders (the enterprises in this case) and a value x that is, given this vector y, minimizing the environmental problem of the designer's problem.

On the other hand, in order to solve bi-level models as those stated above, a reformulation has to be made in order to be tractable in a mathematical modeling environment. In this work, we use the reformulation and solutions strategies of Ramos et al. (2016). In the case of a simple leader multi follower mode (Fig. 3 and P1), each of the follower's problem is replaced by its KKT reformulation (note that these problems are convex optimization problems). Furthermore, the concatenation of all these KKT systems is included into the set of constraints of the leader problem, the latter becoming thus nothing else than a one-level MPCC problem that can be solved by classical MPCC solvers. On the other hand, in the case of a MLSF model, this is the KKT reformulation of the convex follower optimization problem that is included into the constraint set of each leader's problem and this resulting Nash game is then solved by dedicated (and somehow sophisticated) methodology fully described by Ramos et al. (2016). As this work is oriented towards a systematic methodology to plan EIPs rather than the mathematical methods, the reader is invited to consult the work of Ramos et al. (2016) where the detailed solution methodology is explored. Remark that the resulting model after transformation has intrinsic non-linearity's characteristic of KKT conditions (i.e. complementarity conditions).

In this work, the NLP formulation of MPCCs is preferred. All problems were modeled in GAMS®(Brooke et al., 1998) 24.4.2 and transformed through the extended mathematical programming framework (EMP). The framework uses the solver JAMS to reformulate general Nash equilibrium games (in MPEC form) into NCPs. BARON (Tawarmalani and Sahinidis, 2005) with CONOPT as the NLP solver was used to solve all models. In the context of solving the problems presented in this work, a global solver like BARON is very useful to find the solution where the minimization of complementarities is achieved, due to the presence of KKT conditions in the reformulation of both MLSFG and SLMFG problems.

4. Case study

The case study used in the present work in order to prove the usefulness of the proposed approach to EIP and utility network planning and optimization is based on the EIP suggested by Zhang et al. (2008). Using the authors' data and supporting information as a reference, flowsheets of the suggested processes and some other processes proposed in this work were conceived and implemented in process simulation software ProSim Plus®, always trying to guarantee the maximum similarity to ensure an important degree of reality in the study. Zhang et al. (2008) specify that some of the modules are already in existence while others are under construction or conception and planning so, it is not an existing park, but has the potential to become one.

The proposed EIP is located in Mongstad in western Norway. Currently, only the refinery plant and some gas processes are already existent. Then, the proposed EIP is centered on the existing refinery. Also, the proximity of a port and some underground storage tanks, are relevant to search new potential activities. As it is known, the principal refinery products are gasoline, diesel and other light petroleum-derivate products hence, the principal feedstock is the petroleum. Environmental policy is becoming more strictly and narrows, especially with CO_2 and other contaminant emissions. In fact, the creation of a combined head and power plant (CHP, as proposed by Zhang et al. (2008) could be an important addition for the EIP. In addition, this facility may produce the high-pressure steam needed in the refinery and CO_2 that could be also recycled to the refinery. Even so, it would be essential to reduce the CO_2 emissions through a CO_2 capture process. An additional advantage of building these two facilities is the low temperature heat produced. Conversely, high temperature wastes heat the fjords, which are not permitted by the authorities.

The main processes were selected to be suited for the present study, i.e. those where the unit operations, as well as energy exchanges and mass flows, are relevant for the proper development of the EIP, e.g. the refinery and the power plant and there were omitted modules as well e.g. water treatment and aquaculture. This decision stems from the fact that, in overview, these processes do not contribute specially in the utility network optimization. In addition, the chosen modules generally do not involve complicated processes and can be simulated with traditional unit operations widely available in commercial process simulators i.e. reactors, distillation columns, etc. Therefore, the selected processes for this study are coal gasification, CO_2 capture, MeOH and DME synthesis, refinery plant, power plant and air separation processes. Each process is described in detail subsequently.

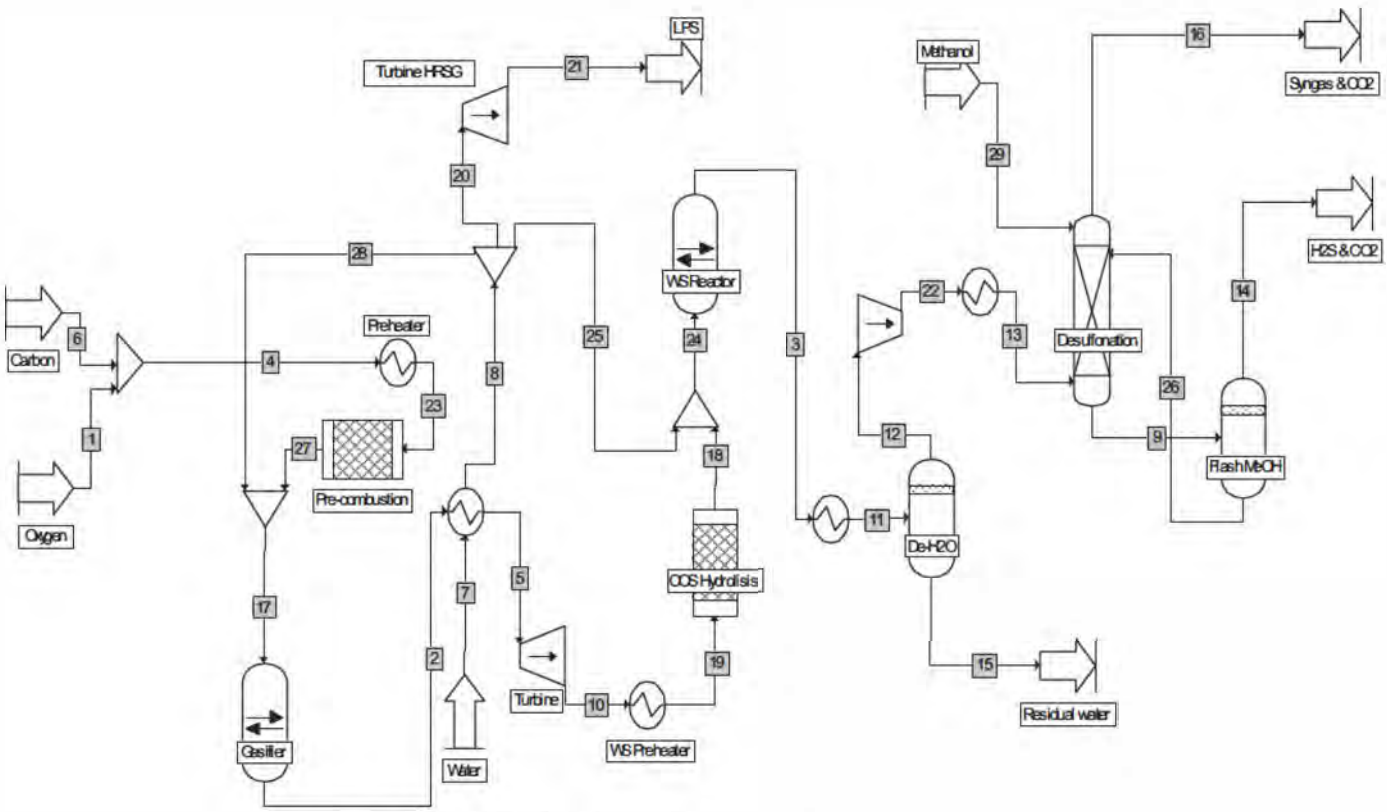

Fig. 5. Flowsheet of the coal gasification process.

4.2. Coal gasification

This process entails, broadly speaking, the transformation of coal into a synthesis gas ($H_2 + CO$). The coal gasification is in fact the beginning of the syngas production that consists of coal gasification, CO_2 capture, and fuel synthesis (in this case methanol and DME). Furthermore, this process allows the option of using the syngas produced as a supplementary fuel in the power plant to gain the advantages by introducing a duct burner for supplementary firing, as explained by Zhang et al., (2008).

Since the supplementary information provided by Zhang et al. (2008), was not complete enough to successfully simulate rigorously all the coal gasification process, extra sources on the subject were considered. In fact, Preciado et al. (2012) worked on the simulation of gas production from steam oxygen gasification similar to the coal gasification process studied by Zhang et al. (2008), based on a Fischer–Tropsch process and other techniques to separate the sulfur from synthesis gas. Thus, using the known information from both studies it was possible to successfully simulate the coal gasification process, whose flowsheet is illustrated in Fig. 5.

The process was divided in two sections as recommended by the works cited above. The first one, i.e. the gasifier itself consists of an equilibrium reactor after a pre-combustion module in which some of the pyrolysis and the combustion were achieved using oxygen and coal as the feed streams. The other part consists of a water shift reactor (WSR) where the ratio of H2/CO in the synthesis gas would be defined. In order to simplify the simulation, the water shift reactor is also considered as an equilibrium reactor. This simplification is not far from reality, since almost all combustions and water shift reactions proceed rapidly to a very near equilibrium state. The thermodynamic model chosen was Peng–Robinson for the vapor phase and ideal for the liquid phase, since almost all species intervening are in vapor phase and are mostly hydrocarbons.

As proposed by Zhang et al. (2008), surat-type coal was selected as feedstock for the gasifier (carbon: 0.374, volatile matter: 0.4, ash: 0.14, moisture: 0.08, sulfur: 0.005, nitrogen: 0.001 in mass fraction). In the present work, the ash in the coal was considered to be an inert constituent, so it was not included in the simulation, and on the other hand volatile matter was considered to be composed of 50/50 n-pentane and n-hexane in mass fraction. The gasification reagents were oxygen and steam coming from the HRSG (heat recovery steam generator). The final composition of the syngas depends significantly on the operating conditions of the gasifier. Thus, process design specifications were introduced in order to obtain operating conditions to obtain desired compositions.

The three components coal, oxygen and steam, are fed to the gasifier to produce raw syngas. The reactions taking place in the gasifier were selected according to Preciado et al. (2012). The second equilibrium reactor, the WS reactor, is where the hydrolysis of the carbonyl sulfide and the water shift reaction (to produce H2, CO2 and CO) takes place, ensuring with a design specification, that molar ratio of H2/CO of syngas is approximately 3. Subsequently, in the dewatering unit (De-H_2O), the elimination of the biggest part of residual water takes place. Finally, the clear syngas is recovered in the desulfonation unit; methanol and dry syngas are fed to the absorption column but, as a result, methanol, H_2S and other contaminants are generated. Furthermore, a flash separator is used to recover methanol to recycle it to the desulfonation unit.

4.3. CO_2 capture

Zhang et al. (2008) proposed a CO_2 capture process based on chemical absorption with amines, which consumes a significant amount of energy regenerating the solvent but is able to extract

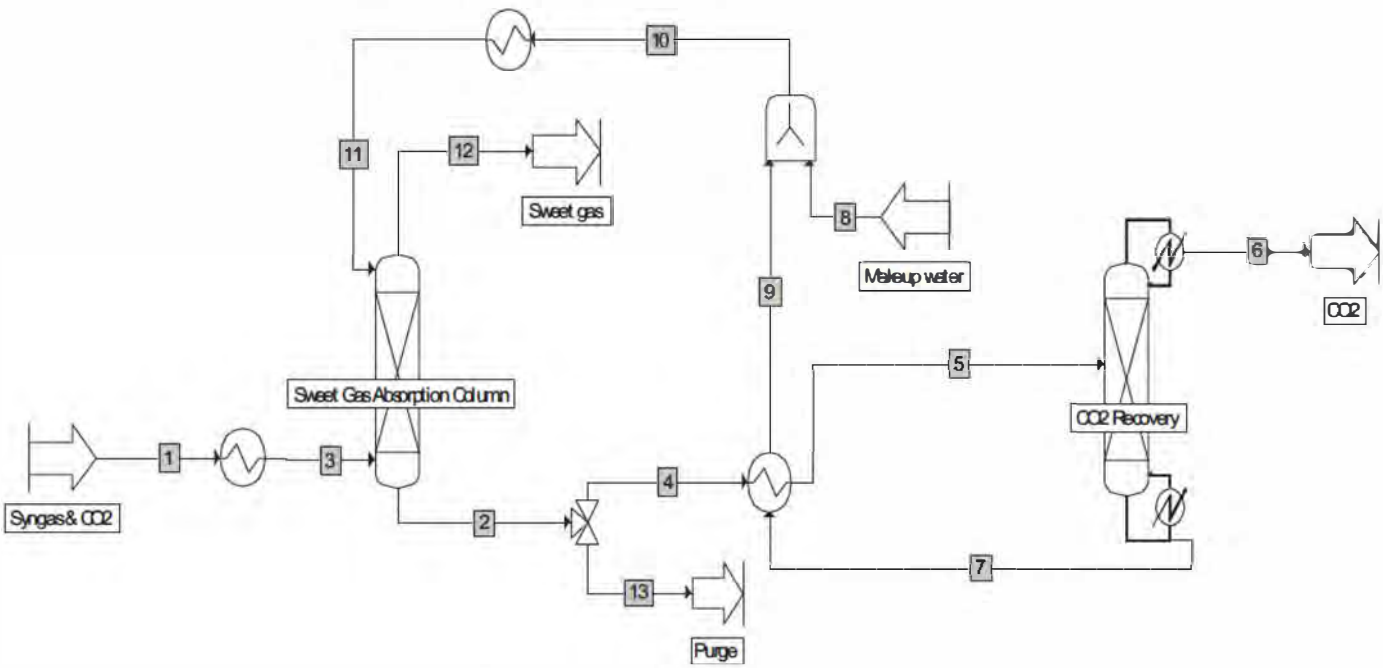

Fig. 6. Flowsheet of the syngas CO_2 capture process.

more CO_2 than others, and has a high degree of technological maturity.

The simulated CO_2 capture process consists of an absorption column and a regeneration column with solvent recirculation. A water-diluted solution of Diethanolamine (DEA) and water was used as solvent, with a mass fraction of roughly 0.28 of DEA and some traces of carbon dioxide which comes from the atmosphere. The proposed EIP in this work includes two CO_2 capture processes: one for the syngas originated from coal gasification and other for the exhaust gas coming from the power plant. There were no differences between the two processes, only the quantity of solvent, due to the differences between the amounts of syngas and flue gas fed. Peng–Robinson equation of state was also chosen to calculate thermodynamic properties. In Fig. 6, the syngas CO_2 capture process is illustrated. The exhaust gas CO_2 capture process is therefore equivalent to the syngas CO_2 capture process.

As it is illustrated in Fig. 6, clear syngas is fed to an absorption column, in which the carbon dioxide is absorbed into the liquid solvent. Then, the CO_2-solvent phase is fed into a distillation column where CO_2 is recovered as distillate and solvent as bottoms, which is recycled into the process.

4.4. MeOH and DME synthesis

As explained by Zhang et al. (2008), this process is divided in two parts: MeOH and DME synthesis. The former is composed by an equilibrium reactor followed by a flash separation drum. Reaction parameters were obtained from Chang et al. (1986), and Soave–Redlich–Kwong thermodynamic model was used. On the other hand, the DME synthesis process is composed by a stoichiometric reactor and two distillation columns. The DME reaction consists in methanol dehydration with Al_2O_3 as catalyst (Xu et al., 1997). In this case, UNIQUAC was chosen as the thermodynamic model.

The $H_2 + CO$ mixture from the CO_2 capture is fed to the first reactor where the methanol synthesis takes place as well as the water gas shift reaction (to produce CO and H_2O). Subsequently, in the flash unit, volatile gases are separated easily from the main liquid products (MeOH and H_2O) and recirculated for better reaction yield. At this point, a methanol is either stored for commercialization or to feed the second reactor, where the DME synthesis takes place. Finally, two distillation columns are used to obtain DME and MeOH as final products.

4.5. Refinery

In order to be consistent with the other processes of the park, it was necessary to simulate the refinery plant in order to obtain the needs of utilities. In the work of Zhang et al. (2008) there was no precision on this process but the quantity of the gas going to and from it, is indicated. With this information and other following assumptions, it was possible to simulate via PROSIM Plus® the whole refinery.

The objective of the refinery plant is to separate and produce petroleum products from crude oil, where are included several classes of fuels, asphalt, paraffin wax, lubricants etc. The procedure for a good distillation of the crude oil is dependent of the composition of the feedstock. Every refinery has its own proper specifications when it comes to the desired product. In general terms, all the products obtained differ on their boiling point and thus, can be recovered from different heights of the tower. In order to simulate the fractions of the products it was necessary to divide the process in atmospheric and vacuum distillation.

The thermodynamic model used in this case was the Peng–Robinson's model as being the most used when working with petroleum oils, as explained above. General flowsheet of the conceived refinery is illustrated in Fig. 8.

In order to simulate the fractions of the products it was necessary to divide the process in atmospheric and vacuum distillation. In the atmospheric part, a use of two-phase liquid-vapor separator was needed for the components of light hydrocarbons that are gas at room temperature and gases such as N_2, H_2S, CO_2, and air. The residue from the two-phase liquid-vapor separator was the inlet for the first distillation column which was used to separate the naphtha from the heavier hydrocarbons like diesel and kerosene and immediately afterwards a second distillation column to divide de diesel from the heavier hydrocarbons (Fig. 9).

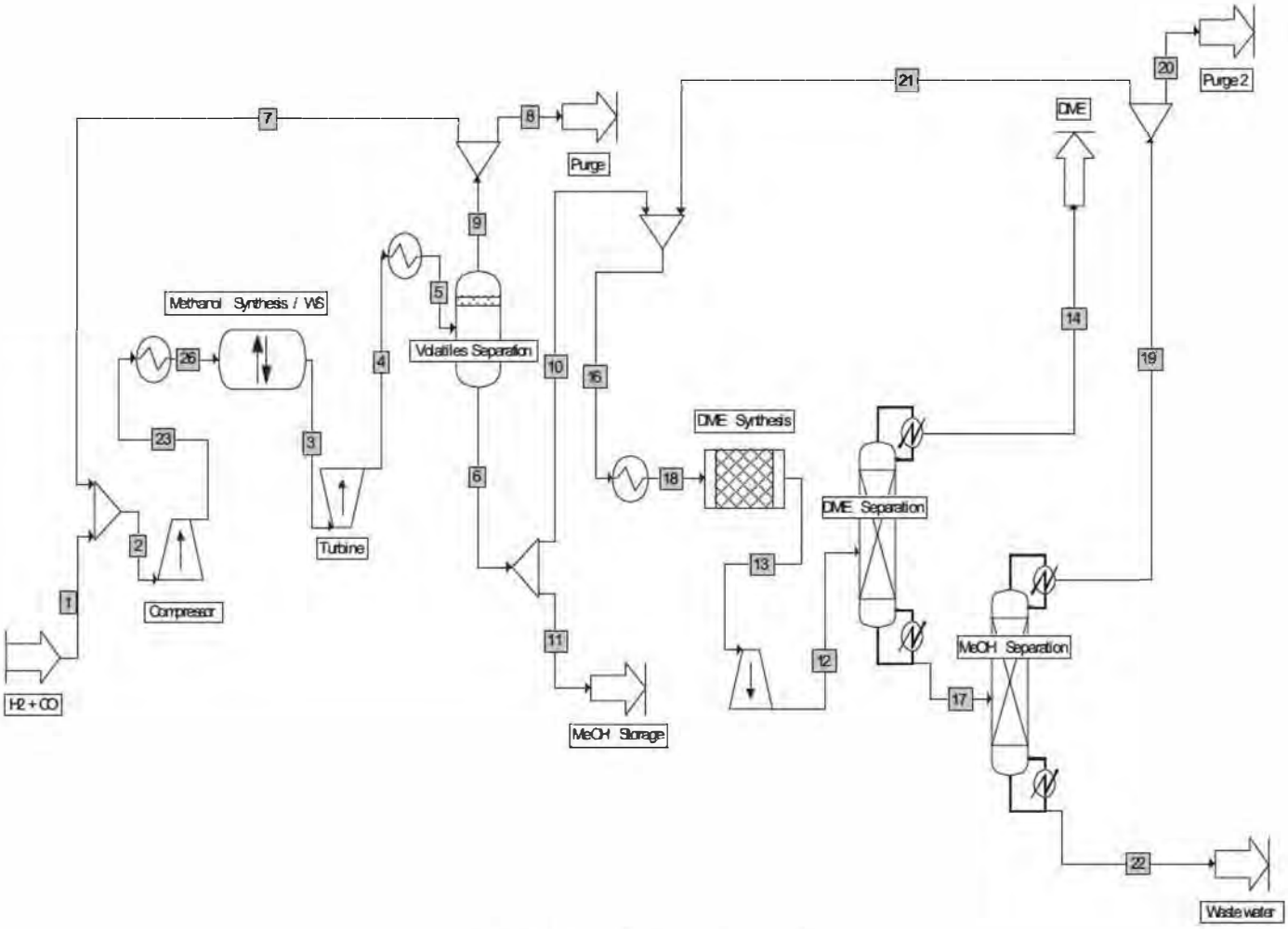

Fig. 7. MeOH/DME synthesis process flowsheet.

For the next fraction, it was necessary to make vacuum distillation in order to separate the hydrocarbons from C_{12} to C_{22} (as the lightest), C_{22} to C_{27} and everything over C_{29} as residue and which was considered as asphalt.

Naphtha reforming has an important role in the petro chemistry industry. The core of this process consists of three or four fixed-bed adiabatically operated reactors in series. The feedstock is mixed with a recycled gas stream containing 0.6–0.9 molar fraction of hydrogen which is heated again. The other product is named reformate which is blended for gasoline purposes and can be treated accordingly to the desired products of the refinery. Each reactor (Fig. 10) was made for a different process in the refining: the first one was made to simulate the dehydrogenation (Turaga et al., 2003). The next reactor was used to make the isomerization and the last one for the hydrocracking process. In this process, alkanes are broken into lower alkane chains thanks to catalyst that is usually used. Another benefit is to saturate the fractioned alkanes and then, to decrease the consumption of hydrogen.

4.6. Power plant

The power plant will be the main energy and steam supplier in the EIP, therefore is one of the most relevant units. The big amounts of energy produced will be distributed among the other facilities participating in this park. Thus, all enterprises will be linked, and this favors the symbiosis within the park.

In order to implement a flowsheet and simulation of the power plant, a gas turbine is used to produce most part of the power. It uses a mixture of natural gas (troll gas) and the gas from the refinery as feedstock, for the sake of consistency with Zhang et al. (2008). Operating conditions of unit operations and requirements were retrieved from Ertesvag et al. (2005). The Peng–Robinson model was used in this process simulation.

On the other hand, supplementary firing is one of the post-combustion processes employed to improve the power plant and gain some advantages. This complement produces an increase of the exhausts gas temperature without changing combustion conditions. Additionally, firing carburant again, will increase the quantity of CO_2 in flue gas and that could be a benefit for the following processes, as the CO_2 Capture. In our case, the feedstock carburant was part of the syngas, coming from coal gasification, not used in the MeOH and DME synthesis. Fig. 11 illustrates the flowsheet for the power plant.

The mixture of natural gas and refinery gas enters, together with the pre-compressed air to the gas turbine to produce both energy and exhaust gases. Afterwards, this gas preheats the crude oil for the refinery plant, and later is fed in the boiler with the syngas to generate the supplementary firing. Subsequently, the flue gas arrives to the HRSG (boiler) where, though the introduction of boiled water, an energy exchange takes place. At this stage, the remaining exhaust gas is recirculated to heat the natural gas, and sent to the CO_2 capture. On the other hand, low-pressure steam is produced by adding a steam turbine at the end of the process.

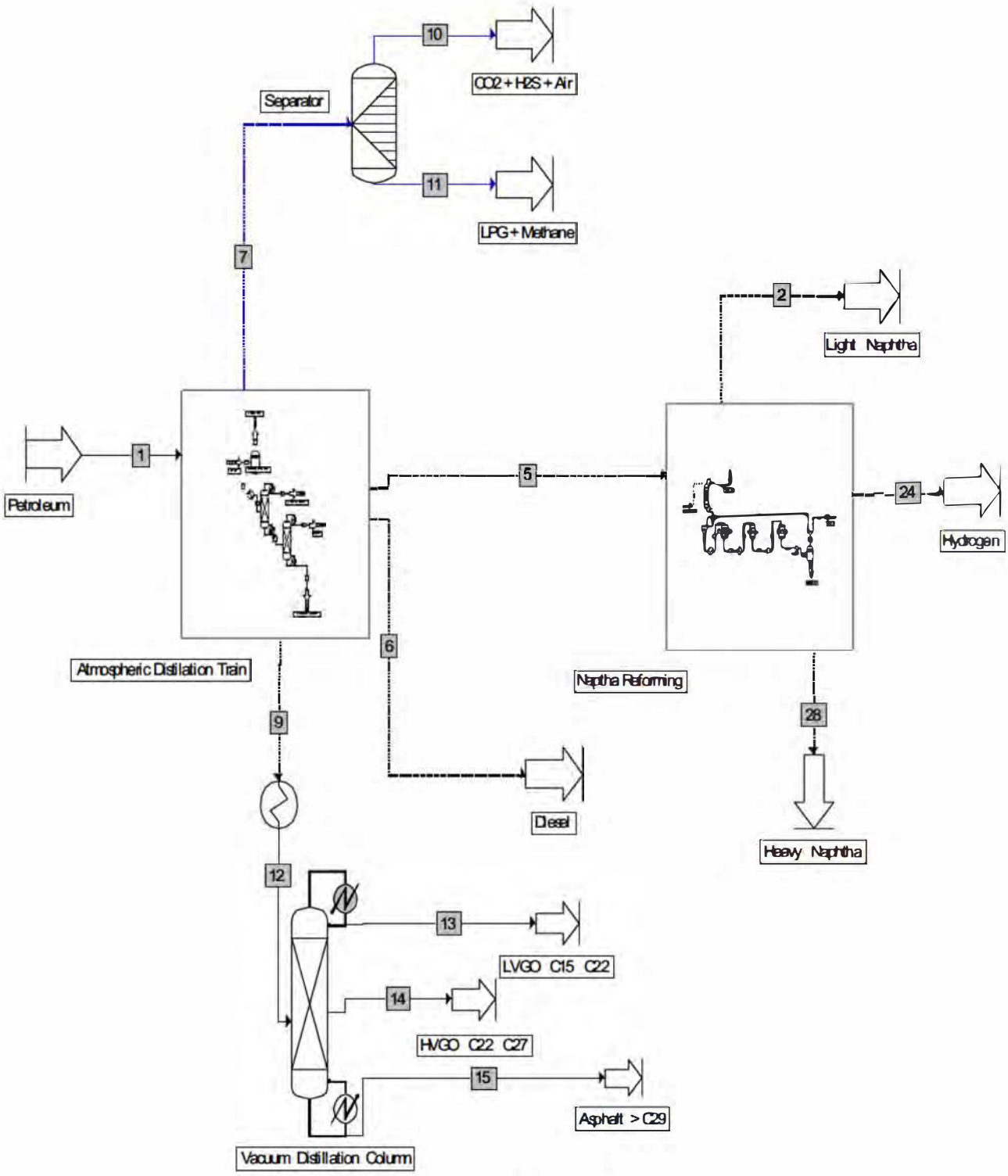

Fig. 8. General flowsheet of the conceived refinery.

4.7. Air separation

The air separation process presents the proposed EIP proposed by Zhang et al. (2008) and is considered as a potential important process for the conception of the optimal utilities network within the EIP. In consequence, a simple air separation facility is implemented and simulated in the present study, even though the original authors did not take into consideration such a process.

Initially three different technologies were contemplated: Pressure swing adsorption process (PSA), which uses the adsorption with zeolite as an alternative to liquefaction, membrane technologies, where the gas can be separated by synthetic membranes and it is also a non-cryogenic process and the cryogenic distillation process, which needs liquefaction to be implemented. The first two methods are usually used to produce relatively small amounts of air separation, and on the contrary, the cryogenic distillation process is the most common method in industry by producing higher

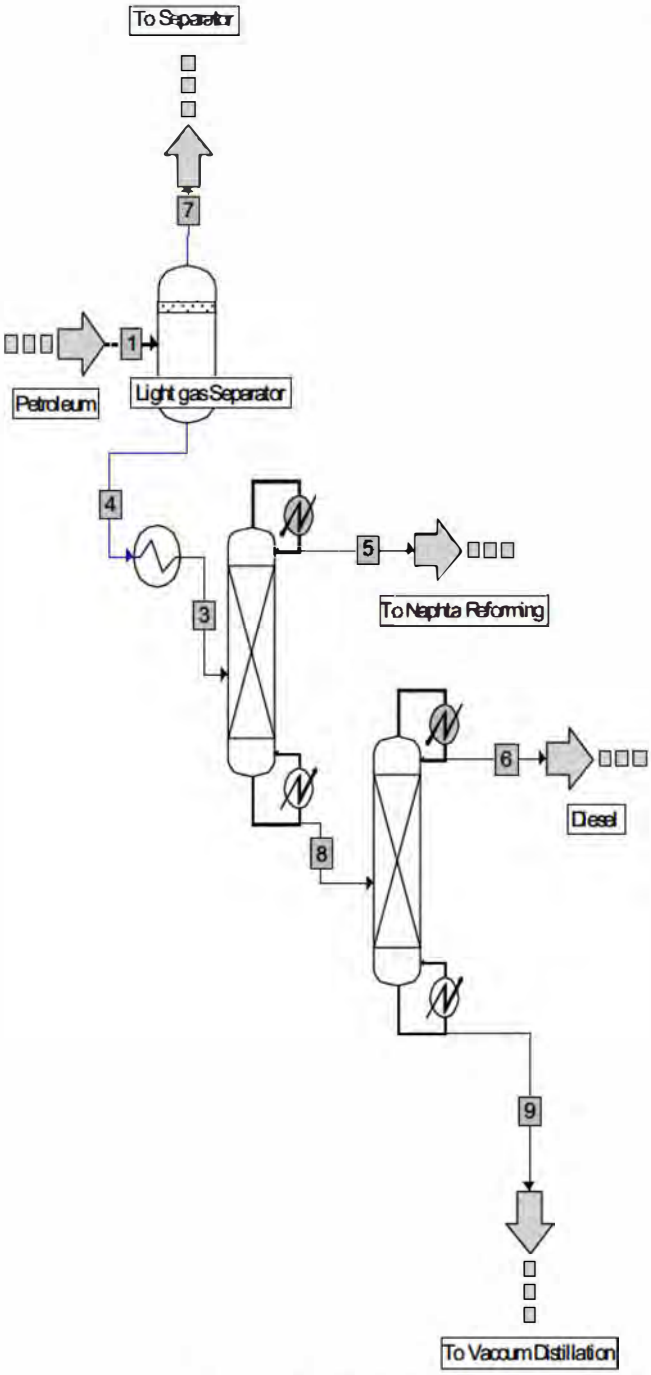

Fig. 9. Atmospheric distillation train.

amounts of production, ensuring the required purity. Hence, this kind of process may be very well suited to an EIP.

The air separation module was simulated based on Cornelissen and Hirs (1998), using low and high pressure distillation columns (Fig. 12). The SRK thermodynamic model is used.

The pre-compressed air is cooled by two heat exchangers to reach liquefaction, at about −174 °C and is fed to the high pressure column. In this unit, a portion of the nitrogen, in liquid state, is separated from the remaining mixture, oxygen and nitrogen, which will flow out through the bottom of this column and will reach the low pressure column. Here, liquid oxygen will exit as bottoms from the column being almost completely separated from nitrogen. It is then vaporized and sent to storage or distribution.

4.8. Potential participating enterprises and utility analysis

Once all processes have been defined and simulated, the EIP potential participating enterprises are defined. In fact, similarly to Zhang et al. (2008), each one of the processes simulated in this work would correspond to a potential participating enterprise. As a result, six enterprises would participate in this EIP, as it can be seen in Fig. 13.

Prior to the utility network planning step, it was required to define what were the processes potentially involved in energy (utility) exchanges, given the energy requirements obtained from the simulations. In this work, the exploitable processes for the utility network optimization are those which need an external contribution to produce the energy exchange. The clearest case would be heat exchangers, which must increase or decrease a stream temperature. Moreover, condensers and reboilers of distillation columns and reactors with energy requirements required as well utilities. On the contrary, electricity was not considered. In addition, note that fired heaters were not included in the present work neither. By taking into consideration these assumptions, different utilities were considered for the potential EIP with different operating temperature ranges (Table 2), by carefully exploring and analyzing operating temperatures and by choosing the mostly adapted potential utilities, taking into account their temperature ranges. Also, utilities which could be used in more than one process were considered as an important aspect to take into account. For instance, several different temperature ranges for the same utility (e.g. water) were considered, since only one temperature range would not suffice for the given energy requirements. Moreover, these different temperature ranges in utilities were considered as a standalone utility, for practicality. In addition, it was considered that several utilities have the potential of generating another utility after first use, i.e. by recycling it potentially to another process which may exploit it.

Utilities data and parameters, purchase cost and CO_2 equivalent emissions included were retrieved from Aspen Properties® utilities database. At this point, it is straightforward to calculate the utility massflow requirements of each process in order to be in accordance with the model described earlier. Defined processes with their respective utility massflow requirements (R) expressed in ton/hour are listed in Table 3.

Note that the power plant has 2 processes which generate exclusively LPS and HPS for use within the EIP (processes 2 and 3), i.e. they correspond to boilers.

5. Results and discussion

Results are presented for both the SLMFG and MLSFG problems introduced in the methodology above. On the other hand, in order to fulfill a significant analysis, annualized utility costs assuming 8200 h/yr as well as fresh utility consumption when enterprises do not participate in the utility network are beforehand calculated by optimizing each single-objective enterprise problem by itself (described by the model above), in other words, by optimizing the internal utility network. Nevertheless, a comparison between the results obtained in this work and those obtained by Zhang et al. (2008) is in fact not possible, since the final objective in both works is not the same. In fact, in their work, utility networks are not taken into account at the same level as in the present work, whereas in the present work no raw material exchanges are contemplated.

For instance, annualized utility costs and fresh utility consumption are reported in Table 4.

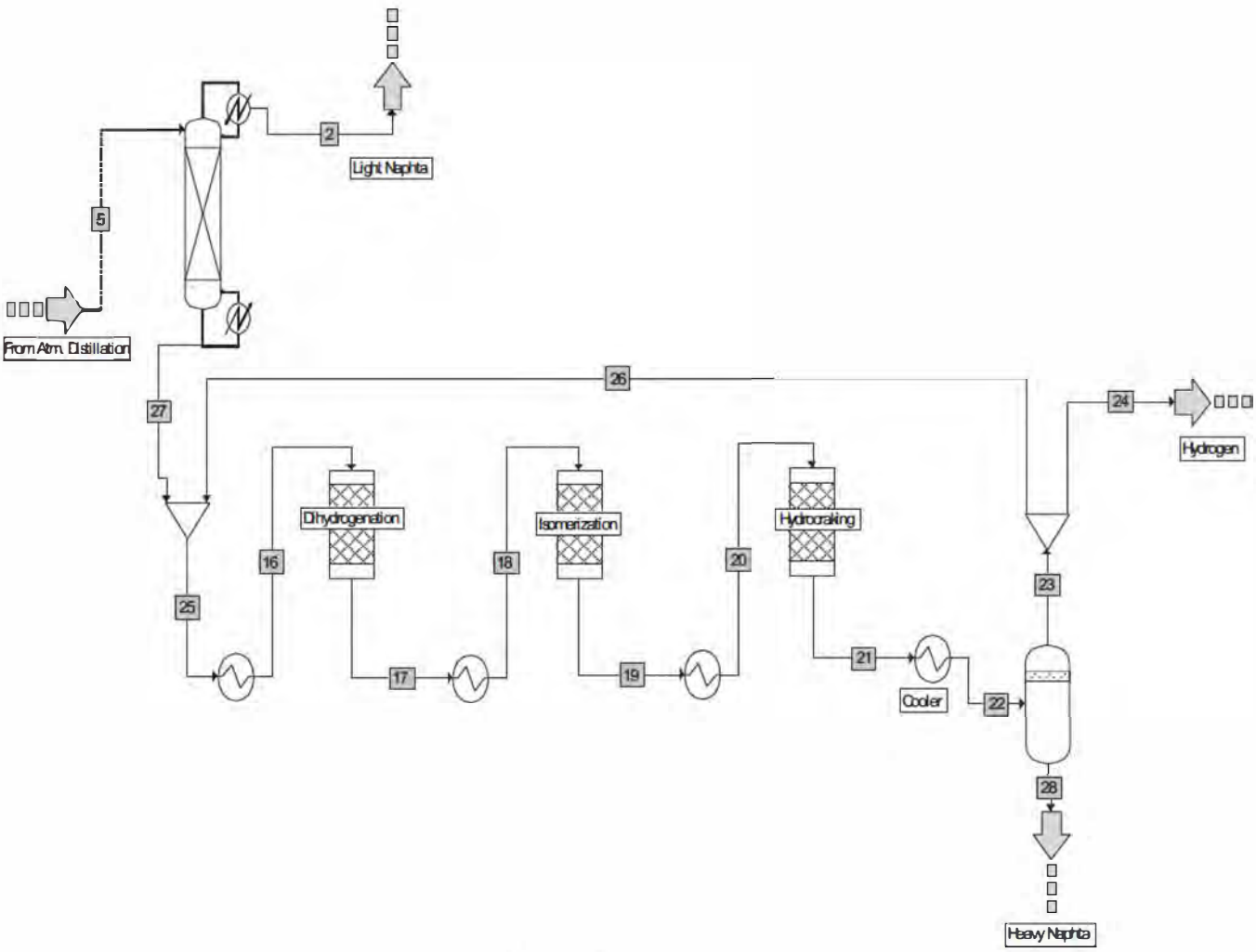

Fig. 10. Naphta reforming flowsheet.

Table 2
Utilities specification and parameters.

Utility	Temperature range (°C)	Acronym	Generate	Cost ($/tonne)	CO_2 emission (tonne CO_2/tonne utility)
Cooling					
Cooling water	5–20	CW	LPSG/HPSG/20W/MW	0.0133	3.509E-03
LPS generation	20–148	LPSG	LPS	5.02	1.748E-01
HPS generation	20–335	HPSG	HPS	6.39	1.686E-01
20°C water	20–70	20W	70W	0.0443	1.167E-02
Refrigerant 1	−40 – −30	R1	–	0.0443	7.495E-05
R1	−65 – −55	R2	–	0.0789	7.495E-05
R2	−103 – −93	R3	–	0.114	7.495E-05
Very low temperature	−270 – −260	VLT	–	0.119	7.495E-05
LPS generation 2	147–148	LPSG2	LPS	4.01	1.396E-01
HPS generation 2	334–335	HPSG2	HPS	2.73	7.207E-02
Heating					
70°C water	70–60	70W	60W	0.00889	2.336E-03
60°C water	60–40	60W	40W	0.0178	4.666E-03
40°C water	40–20	40W	LPSG/HPSG/20W/MW	0.0178	4.665E-03
Mild water	20–5	MW	CW	0.0133	3.509E-03
LPS	148–147	LPS	LPSG2	4.16	1.396E-01
HPS	335–334	HPS	HPSG2	4.30	7.207E-02

As can be seen, the air separation process is the enterprise which consumes the great bulk of fresh utility and on consequence the most elevated utility cost, given that it mainly needs cooling utilities which cannot be shared with other processes once used without regenerating them. In addition, it should be noted that the main part of fresh utilities correspond in fact to cooling utilities, i.e. 78,303.9 tons/hr. vs. only 1716.8 tons/hr. of hot utilities, mostly contributed by the air separation enterprise (which represents 48,984.7 tons/hr.). In the second place, the power plant does not need fresh flowrate of the utilities considered in the present work, since its main utility requirements concern fuel fired heaters to achieve high temperatures needed for the combustions.

Table 3
Processes utilities requirements.

Enterprise	Process	Utility	R (tonne/hr)	Cost ($)	CO_2 emission (tonne CO_2)
Coal gasification	1	HPSG	586.2	3745.8	98.8
	2	HPSG	473.0	3022.5	79.7
	3	HPSG	117.3	749.5	19.8
	4	HPSG	58.4	373.2	9.8
	5	LPSG	51.4	258.0	9.0
	6	20W	272.0	12.0	3.2
	7	CW	697.4	9.3	2.4
	8	20W	322.0	14.3	3.8
	9	CW	488.7	6.5	1.7
	10	R1	1939.4	85.9	0.1
	11	MW	540.5	7.2	1.9
CO_2 capture	1	MW	3.8	0.1	0.0
	2	60W	207.9	3.7	1.0
	3	CW	637.2	8.5	2.2
	4	LPS	19.9	91.7	2.8
	5	CW	41.2	0.5	0.1
	6	LPS	25.3	116.6	3.5
	7	LPS	0.1	0.5	0.0
	8	20W	604.6	26.8	7.1
	9	CW	3231.9	43.0	11.3
	10	CW	1794.1	23.9	6.3
	11	LPS	50.3	231.9	7.0
	12	CW	41.9	0.6	0.1
	13	LPS	66.2	305.2	9.2
MeOH and DME Synthesis	1	LPSG	68.4	343.4	12.0
	2	20W	884.7	39.2	10.3
	3	CW	933.9	12.4	3.3
	4	60W	234.0	4.2	1.1
	5	HPS	34.8	149.6	2.5
	6	LPSG	3.2	16.1	0.6
	7	LPSG	18.2	91.4	3.2
	8	20W	989.9	43.9	11.6
	9	CW	2538.1	33.8	8.9
	10	R1	8448.2	374.3	0.6
	11	CW	268.7	3.6	0.9
	12	40W	318.1	5.7	1.5
	13	CW	72.3	1.0	0.3
	14	60W	218.1	3.9	1.0
Refinery	1	60W	0.2	0.0	0.0
	2	CW	2860.3	38.0	10.0
	3	60W	1054.6	18.8	4.9
	4	LPS	141.2	650.9	19.7
	5	20W	448.1	19.9	5.2
	6	CW	4728.7	62.9	16.6
	7	R3	6.0	0.7	0.0
	8	HPS	155.3	667.8	11.2
	9	20W	525.4	23.3	6.1
	10	20W	1178.2	52.2	13.7
	11	HPS	12.9	55.5	0.9
	12	CW	529.7	7.0	1.9
	13	LPS	60.2	277.5	8.4
	14	20W	19.1	0.8	0.2
	15	HPSG	26.2	167.4	4.4
	16	LPSG	28.3	142.1	4.9
	17	20W	149.6	6.6	1.7
	18	CW	268.5	3.6	0.9
Power Plant	1	HPS	9.6	41.3	0.7
	2	LPSG2	–	–	–
	3	HPSG2	–	–	–
Air Separation	1	LPSG	27.5	138.1	4.8
	2	20W	188.2	8.3	2.2
	3	CW	482.5	6.4	1.7
	4	R1	377.2	16.7	0.0
	5	R1	2863.3	126.8	0.2
	6	R2	1835.5	144.8	0.1
	7	R3	2789.9	318.0	0.2
	8	VLT	6049.3	719.9	0.5
	9	VLT	8412.3	1001.1	0.6
	10	VLT	9194.9	1094.2	0.7
	11	VLT	2436.7	290.0	0.2
	12	VLT	6545.0	778.9	0.5
	13	VLT	8123.5	966.7	0.6
	14	MW	623.5	8.3	2.2
	15	40W	78.9	1.4	0.4

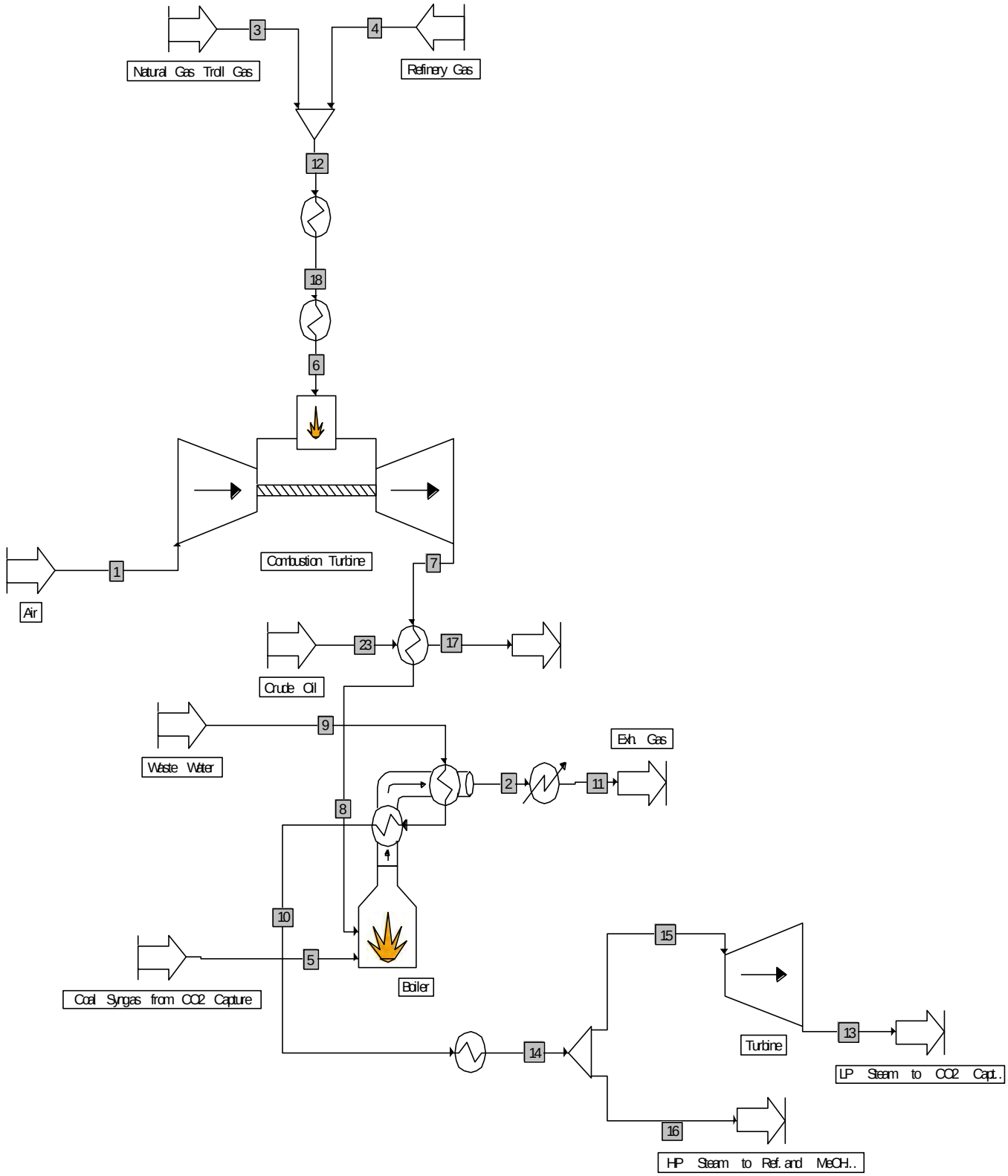

Fig. 11. Power plant flowsheet.

As aforementioned, fuel is not considered in this work. On the contrary, process 1 of the power plant requires HPS to operate which can be supplied by local HPS boilers and at the same time recover the condensed water to generate more HPS steam and operate in closed circuit. All other processes show normal operation, i.e. expected utility costs and consumption. Note that by optimizing each individual enterprise utility network savings in total utility consumption can be achieved (∼10%), providing hints to further potential savings in the EIP utility network optimization. As expected, the refinery is the lead CO_2 producing enterprise.

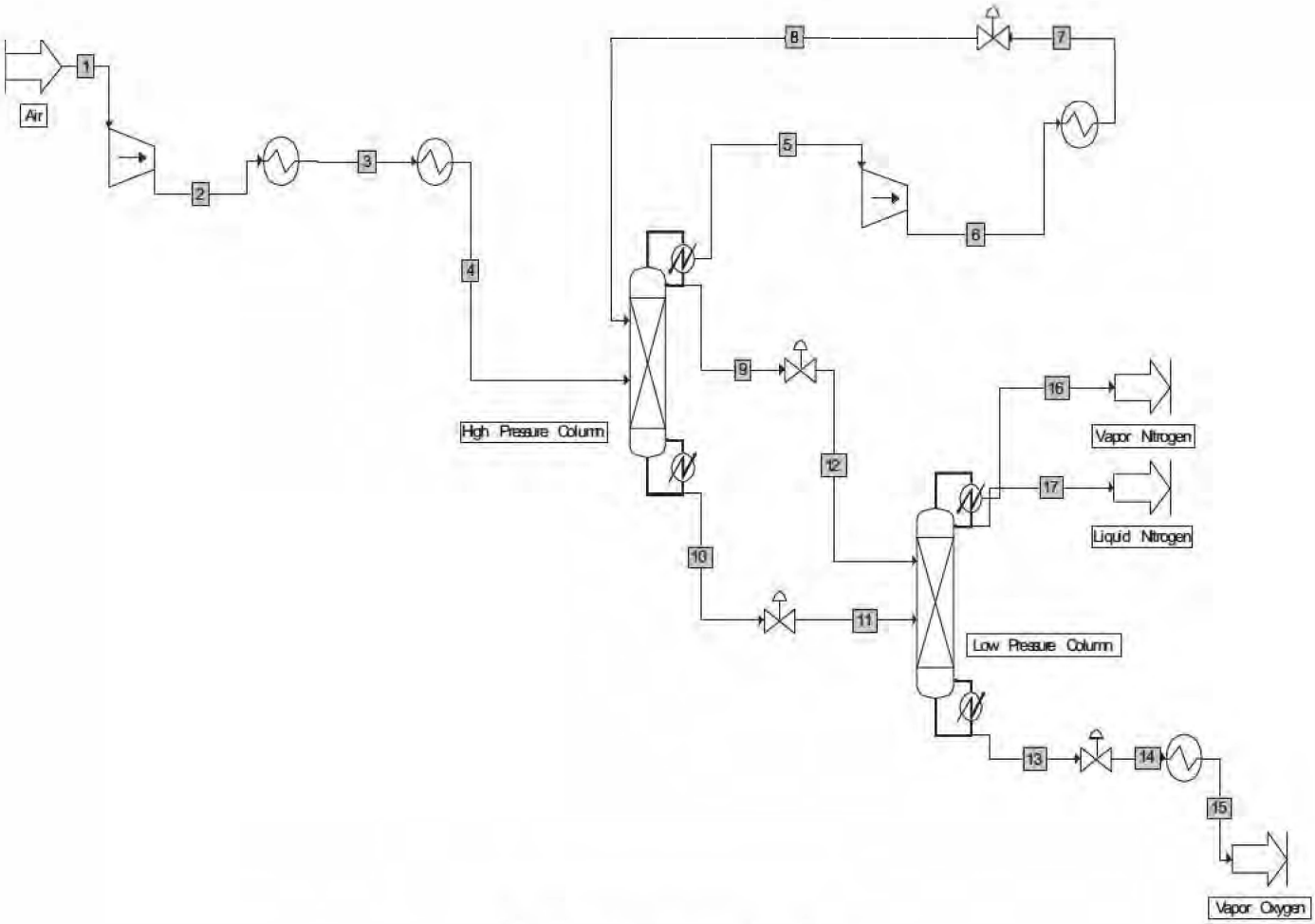

Fig. 12. Air separation process flowsheet.

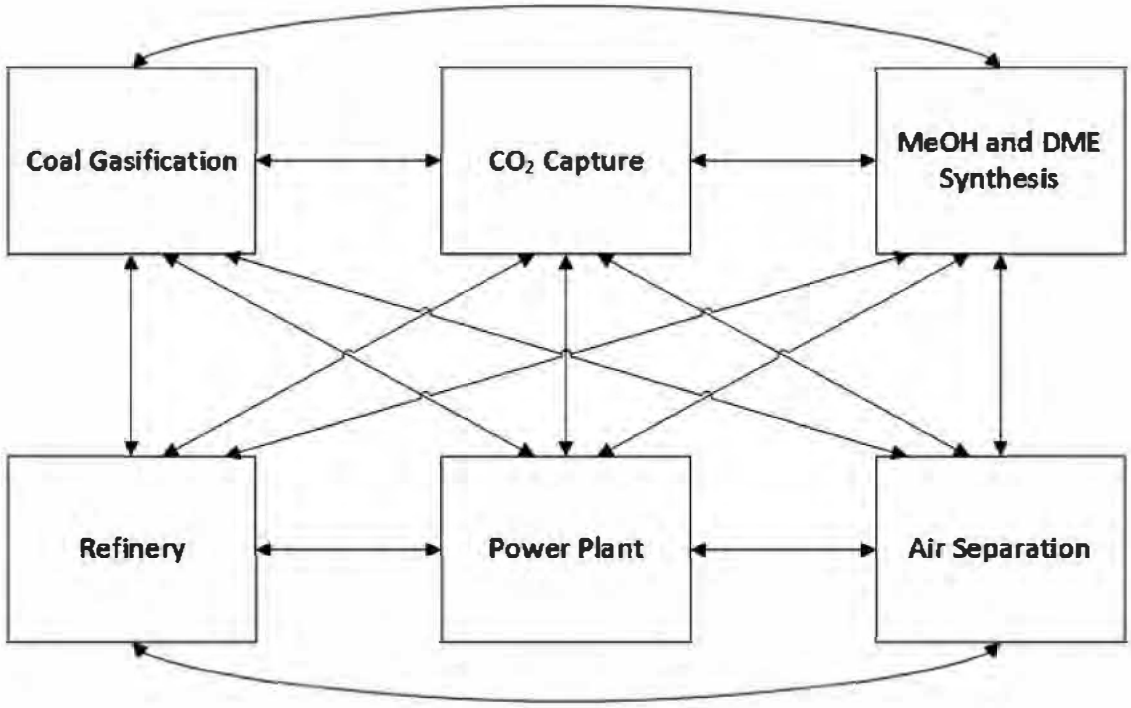

Fig. 13. Potential EIP participating enterprises.

Table 4
Results of enterprises operating by themselves.

Enterprise	Utility costs (MMUSD/yr)	Fresh utility consumption (tonne/hr)	CO_2 emissions (tonne/hr)
Coal gasification	11.94	3819.68	28.46
CO_2 capture	6.21	6112.17	43.7
MeOH and DME Synthesis	5.17	12396.12	16.99
Refinery	12.37	8708.44	63.83
Power plant	0.056	0	0
Air separation	45.04	48984.27	4.99
Total		**80020.7**	**157.98**

Table 5
Results for the MLSFG utility network optimization.

Enterprise	Utility costs (MMUSD/yr)	Relative gain (%)	Cold/hot fresh utility consumption (tonne/hr)	CO_2 emissions (tonne/hr)	Utility flowrate sent (tonne/hr)	Utility flowrate received (tonne/hr)
Coal gasification	2.78	76.74	3125.45/0	4.31	2263.73	2420.77
CO_2 capture	1.7	72.58	5746.26/23.54	23.45	2255.618	784.429
MeOH and DME synthesis	4.01	22.38	12261.25/0	14.01	1397.12	2636.72
Refinery	7.46	39.69	7225.6/142.65	45.25	3901.787	4215.654
Power plant	0.056	0	0/0	0	0	66.882
Air separation	44.99	0.126	49110.12/0	5.34	1224.067	917.867
Total		–	**77468.7/166.19**	**92.35**	**11042.32**	**11042.32**

Table 6
Results for the SLMFG utility network optimization.

Enterprise	Utility costs (MMUSD/yr)	Relative gain (%)	Cold/hot fresh utility consumption (tonne/hr)	CO_2 emissions (tonne/hr)	Utility flowrate sent (tonne/hr)	Utility flowrate received (tonne/hr)
Coal gasification	2.75	76.96	3125.45/0	4.31	1818.7	2418.73
CO_2 capture	2.13	65.67	5524.29/0.982	19.52	2310.68	1072.51
MeOH and DME synthesis	3.69	28.63	11923.24/0	12.83	2169.79	2257.14
Refinery	6.57	46.86	7785.57/137.12	46.44	2130.79	2785.14
Power plant	0.056	0	0/0	0	28.09	37.73
Air separation	44.98	0.133	49110.12/0	5.34	1031.32	918.06
Total		–	**77468.7/138.1**	**88.43**	**9489.4**	**9489.4**

Indeed, results from both the MLSFG and SLMFG for the utility network in an EIP context are presented in Tables 5 and 6 respectively.

From these results, it can be seen that as expected, fresh utility consumption as well as CO_2 emissions decrease compared from the case where each enterprise operates by itself, i.e. 3% in utility consumption for the MLSFG and the SLMFG formulations plus 41.5% and 44% in CO_2 emissions respectively. This decrease on utility consumption may seem insignificant, but as it can be seen most enterprises benefit from this decrease which incentives the fact of sharing utilities and most importantly on CO_2 emissions, where they are reduced nearly by half. For instance, the coal gasification enterprise has an overall relative gain of 76.87% regarding its base case, which is more than satisfactory and a consistent reduction of 84.85% in CO_2 emissions. In order to compare the two strategies of resolution, it is important to remember that the environmental and economic objectives depend on both the quantity used but also the type. For example, the refinery consumes less utility than the separation of the air by cons in terms of environmental impact the results are significantly different. The resolution of such a problem is complex that is why the strategies of resolution are used. The SLMF is expected to favor business gains while the MLSF is expected to promote environmental impact. Contrary to the results obtained in the previous study on water networks, the optimum points are very close there is a slight difference between the two strategies in terms of objective functions on the other hand the network obtained is totally different. By reviewing the reduction on CO_2 emissions and the sharing scheme in Figs. 14 and 15, utility sharing between Coal Gasification and CO_2 capture (as well as with other enterprises) allows the EIP to emit considerably less CO_2 into the atmosphere. In addition, it is important to note that Coal Gasification shares LPS and HPS with other enterprises, and since the latter utilities are among the most CO_2 producing ones, the emissions reduction is justified. Another important point to notice from these results is that a few differences are observed when both SLMF and MLSF are compared regarding CO_2 emissions. Indeed, in the model presented, through the simulation process stage, the needs of utilities have been clearly defined and they need to be satisfied. The satisfaction of the needs is done through closed loops and there is not a lot of available solutions able to satisfy these demands. This lack of freedom degree explains that there is not a lot of differences between the solutions of SLMF and MLSF. In Ramos et al. 2016, the model of water management was providing an higher degree of freedom on the satisfaction of the demand and the gap between the final outcomes of the MLSF and SLMF formulations were really important (the latter being clearly better). In the application of the same methodologies considered in this work the degree of freedom is intrinsically reduced, as mentioned above, and no huge difference between the results of both formulations can be observed. Neverthe-

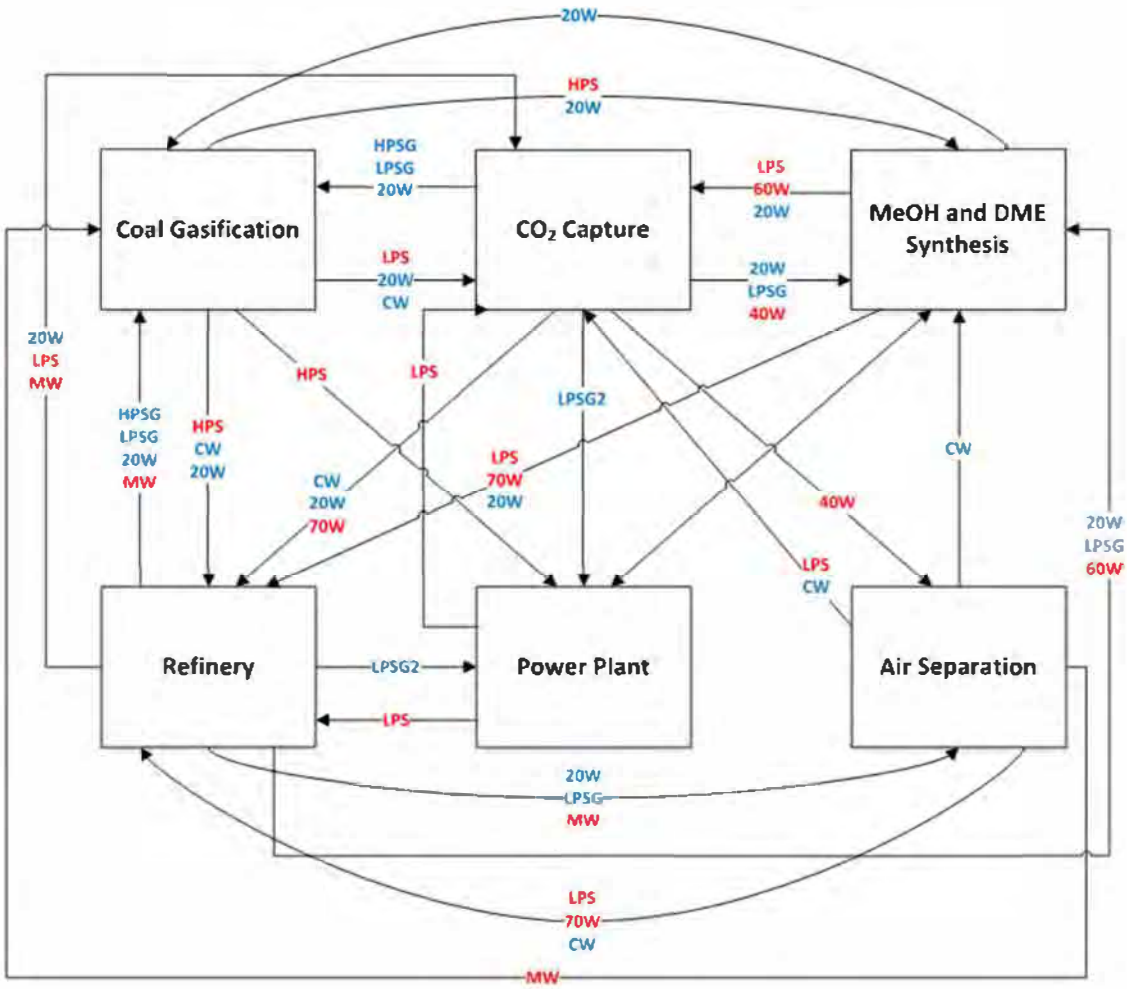

Fig. 14. Map of inter-enterprises exchanges of the SLMF solution.

Table 7
Results for the MLSFG utility network optimization w/o the air separation enterprise.

Enterprise	Utility costs (MMUSD/yr)	Relative gain (%)	Cold/hot fresh utility consumption (tonne/hr)	CO_2 emissions (tonne/hr)	Utility flowrate sent (tonne/hr)	Utility flowrate received (tonne/hr)
Coal gasification	2.75	76.97	3125.45	4.31	815.1	2420.77
CO_2 capture	1.56	74.8	5201.99/4.05	18.82	3442.32	1514.49
MeOH and DME synthesis	4.89	5.44	12261.25/0	14.01	3802.29	2405.51
Refinery	7.56	38.93	8393.33/184.87	55.24	1258.59	2918.12
Power plant	0.056	0	0/0	0	11.487	70.87
Total		–	**28982/188.9**	**92.37**	**9329.76**	**9329.76**

less this freedom is sufficient to allow a real improvement of the results compared with the stand-alone situation. These two applications give an idea of the applicability of the methodology and its limitations. On the other hand, it should be noted that when environmental issues are prioritized, i.e. SLMFG formulation, the decrease in fresh utility consumption is negligible, leading to a 4% difference in CO_2 emissions, which is not negligible. In fact, the sent and received utility flowrate columns in Tables 5 and 6 show how these resources are shared between enterprises. It is interesting to note that almost all hot utilities can be supplied by sharing between enterprises (not the case of cold utilities, since its regeneration is not considered) which in most cases represent most of the relative gain. Nevertheless, there are cases in which the equilibrium solution does not provide enterprises with a positive relative gain. It is always the case of the power plant and the air separation enterprise, by considering negligible its relative gain. In this case, the immediate consequence that may come to thought is that if either formulations solution is chosen, these enterprises will not participate in the EIP utility network. The power plant case is understandable, since its benefits from participating in the EIP are surely not coming by sharing the utilities taken into account in this study, but from other sources (Zhang et al., 2008). Although, the air separation enterprise case is different, since it is the most cooling-utility-intensive enterprise in the EIP, more specifically in refrigerants. As can be seen from Table 2, low temperature utilities in the present study are not possible to share unless they are re-

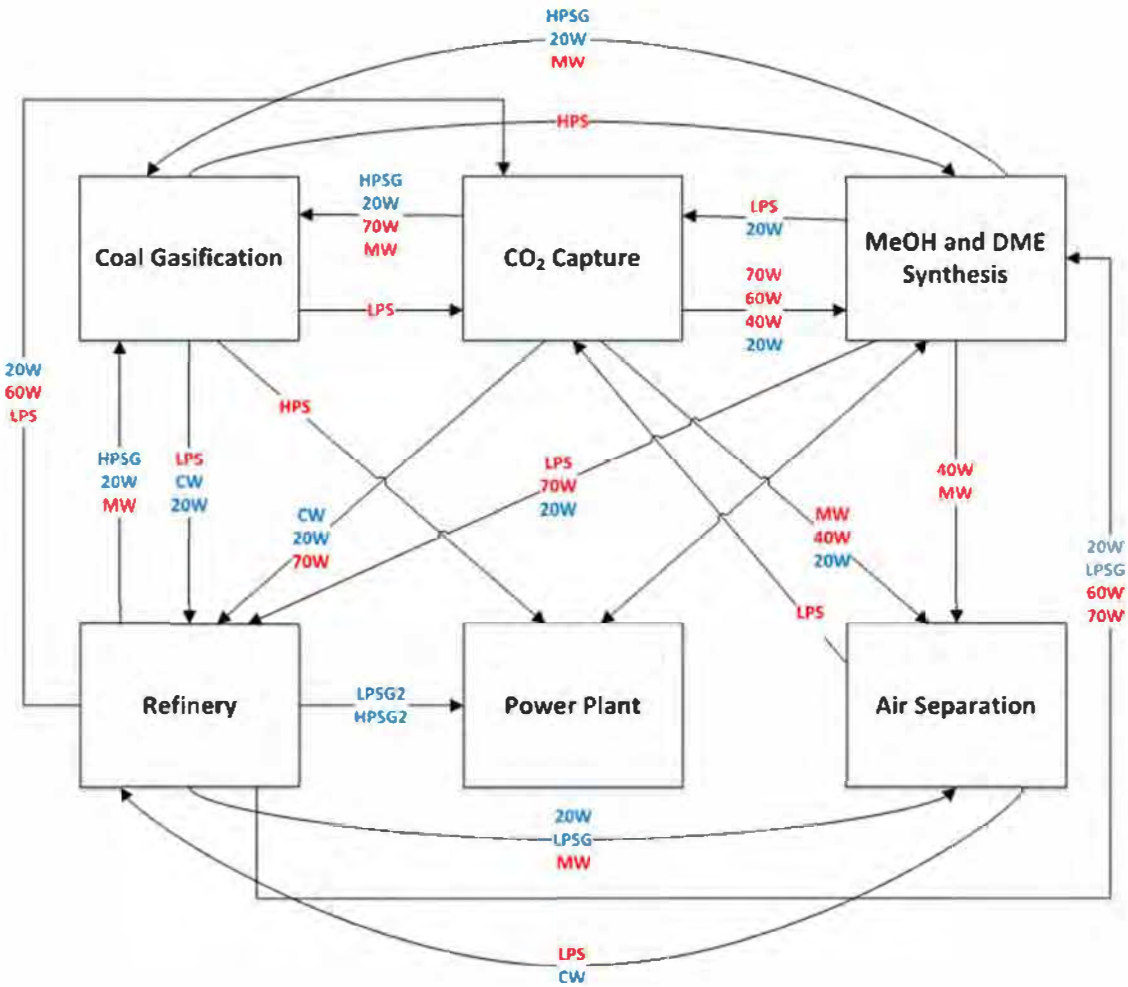

Fig. 15. Map of inter-enterprises exchanges of the MLSF solution.

Table 8
Results for the SLMFG utility network optimization w/o the air separation enterprise.

Enterprise	Utility costs (MMUSD/yr)	Relative gain (%)	Cold/hot fresh utility consumption (tonne/hr)	CO_2 emissions (tonne/hr)	Utility flowrate sent (tonne/hr)	Utility flowrate received (tonne/hr)
Coal gasification	2.72	77.23	3125.45/0	4.31	778.39	2420.77
CO_2 capture	2.58	58.37	5742.47/54.38	27.74	84.14	923.67
MeOH and DME synthesis	3.65	29.48	11720.77/0	12.12	89.75	3075.86
Refinery	7.2	41.8	8393.33/111.24	44.96	5709.82	232.15
Power plant	0.056	0	0/0	0	28.09	37.73
Total		–	**28982/165.6**	**89.12**	**6690.2**	**6690.2**

generated. In fact, of the roughly 49,110 ton/hr of utility consumption of this enterprise, all correspond to cold utilities. Thus, the latter explains why there is not considerable potential utility-related gain regarding the air separation enterprise. From the latter conclusion, in order to evaluate the potential case where the air separation enterprise does not participate on the utility network part of the EIP, the optimal utility network both in MLSFG and SLMFG formulations were solved. Results are shown on Tables 7 and 8 respectively.

From Figs. 14 and 15, we can see that both solutions are similar although a few differences in inter-enterprises exchanges. The main difference between the two cases is evidently the fresh cold utility consumption, since most of the contribution came from the air separation enterprise. On the other hand, as can be seen, the air separation enterprise contribution to hot utility fresh consumption is negligible compared to cold utility consumption. Relative gains among enterprises are somewhat similar when compared to the 6-enterprise potential EIP, specially the SLMFG formulation. Nevertheless, it should be noted that both MLSFG and SLMFG formulations for the 5-enterprise potential EIP shares the same overall fresh utility consumption, but it does not correspond to the same solution regarding the equilibrium of the enterprises. This phe-

nomenon is completely understandable, since the nature and formulation of the problem is not the same. In fact, it is expectable to obtain different equilibrium solutions from either problem. Moreover, it can be seen that CO_2 consumption between the two cases is maintained, due to the small contribution of the air separation enterprise. Given the relative gains obtained, the most interesting planning of the utility network within the 5 enterprise EIP will be that corresponding to the SLMFG formulation.

6. Conclusions and perspectives

In this study, the importance of process engineering in EIP planning is successfully addressed by creating utility sharing networks through process simulation and subsequently by modeling the problem as a MLFG optimization problem. Process engineering and modeling provide the necessary unit operation information in order to obtain successful results. The obtained results highlight the pertinence of Stackelberg–Nash equilibrium models in order to achieve both environmental and economic benefits. In addition, utility networks are planned with the proposed methodology generating savings in consumption, by reusing and exploiting them before discharging. On the other hand, the Stackelberg game structure is demonstrated to influence the results of the optimal configuration, which is completely coherent and expected.

As perspectives, a multi-leader-multi-follower game approach for modeling utility networks could be promising by defining different environmental authorities (energy consumption, water and different environmental impacts). Indeed, it is evident that environmental impacts measured through life-cycle analysis rather than CO_2 equivalents could bring important improvements to the designs obtained. On the other hand, it could be interesting to propose a model with power suppliers in the upper level e.g. local energy companies with the consideration of renewable energies that define process of utilities.

References

Alexander, B., Barton, G., Petrie, J., Romagnoli, J., 2000. Process synthesis and optimization tools for environmental design: methodology and structure. Comput. Chem. Eng. 24, 1195–1200.

Andiappan, V., Tan, R.R., Ng, D.K.S., 2016. An optimization-based negotiation framework for energy systems in an eco-industrial park. J. Cleaner Prod. 129, 496–507. doi:10.1016/j.jclepro.2016.04.023.

Ang, J., Fukushima, M., Meng, F., Noda, T., Sun, J., 2013. Establishing Nash equilibrium of the manufacturer-supplier game in supply chain management. J. Global Optim. 56, 1297–1312.

Aussel, D., Cervinka, M., Marechal, M., 2016. Deregulated electricity markets with thermal losses and production bounds: models and optimality conditions. RAIRO - Oper. Res. 50, 19–38.

Aviso, K.B., Tan, R.R., Culaba, A.B., Cruz Jr., J.B., 2010. Bi-level fuzzy optimization approach for water exchange in eco-industrial parks. Process Safety Environ. Protect. 88, 31–40. doi:10.1016/j.psep.2009.11.003.

Boix, M., Montastruc, L., Pibouleau, L., Azzaro-Pantel, C., Domenech, S., 2011. A multiobjective optimization framework for multicontaminant industrial water network design. J. Environ. Manage. 92, 1802–1808. doi:10.1016/j.jenvman.2011.02.016.

Boix, M., Montastruc, L., Pibouleau, L., Azzaro-Pantel, C., Domenech, S., 2012. Industrial water management by multiobjective optimization: from individual to collective solution through eco-industrial parks. J. Cleaner Prod. 22, 85–97. doi:10.1016/j.jclepro.2011.09.011.

Boix, M., Montastruc, L., Azzaro-Pantel, C., Domenech, S., 2015. Optimization methods applied to the design of eco-industrial parks: a literature review. J. Cleaner Prod. 87, 303–317.

Boix, M., Montastruc, L., Ramos, M., Gentilhomme, O., Domenech, S., 2017. Benefits analysis of optimal design of eco-industrial parks through life cycle indicators. Computer Aided Chemical Engineering 40, 1951–1956.

Brooke, A., Kendrick, D., Meeraus, A., Raman, R., 1998. GAMS User's Guide.

Chae, S.H., Kim, S.H., Yoon, S.-G., Park, S., 2010. Optimization of a waste heat utilization network in an eco-industrial park. Appl. Energy 87, 1978–1988. doi:10.1016/j.apenergy.2009.12.003.

Chang, T., Rousseau, R.W., Kilpatrick, P.K., 1986. Methanol synthesis reactions: calculations of equilibrium conversions using equations of state. Ind. Eng. Chem. Proc. Des. Dev. 25, 477–481. doi:10.1021/i200033a021.

Chen, X., Zhang, H., Zhang, M., Chen, J., 2017. Optimal decisions in a retailer Stackelberg supply chain. Int. J. Prod. Econ. 187, 260–270.

Chertow, M.R., 2000. Industrial symbiosis: literature and taxonomy. Ann. Rev. Energy Environ. 25, 313–337. doi:10.1146/annurev.energy.25.1.313.

Chew, I.M.L., Tan, R.R., Foo, D.C.Y., Chiu, A.S.F., 2009. Game theory approach to the analysis of inter-plant water integration in an eco-industrial park. J. Cleaner Prod. 17, 1611–1619. doi:10.1016/j.jclepro.2009.08.005.

Chew, I.M.L., Thillaivarrna, S.L., Tan, R.R., Foo, D.C.Y., 2011. Analysis of inter-plant water integration with indirect integration schemes through game theory approach: pareto optimal solution with interventions. Clean Tech. Environ. Policy 13, 49–62. doi:10.1007/s10098-010-0280-x.

Cornelissen, R.L., Hirs, G.G., 1998. Exergy analysis of cryogenic air separation. Energy Conver. Manag. 39, 1821–1826. doi:10.1016/S0196-8904(98)00062-4.

El-Halwagi, M.M., 1997. Pollution Prevention Through Process Integration: Systematic Design Tools. Academic press.

Ertesvag, I.S., Kvamsdal, H.M., Bolland, O., 2005. Exergy analysis of a gas-turbine combined-cycle power plant with precombustion CO_2 capture. Energy 30, 5–39.

Feng, L., Govindan, K., Li, C., 2017. Strategic planning: design and coordination for dual-recycling channel reverse supply chain considering consumer behavior. Eur. J. Oper. Res. 260, 601–612.

Fichtner, W., Frank, M., Rentz, O., 2004. Inter-firm energy supply concepts: an option for cleaner energy production. J. Cleaner Prod. Appl. Ind. Ecol. 12, 891–899. doi:10.1016/j.jclepro.2004.02.036.

Frosch, R.A., Gallopoulos, N.E., 1989. Strategies for manufacturing. Scientif. Am. 261, 106–115.

Gao, J., You, F., 2017a. Game theory approach to optimal design of shale gas supply chains with consideration of economics and life cycle greenhouse gas emissions. AIChE J., 63 7, 2671–2693.

Gao, J., You, F., 2017b. Economic and environmental life cycle optimization of non-cooperative supply chains and products systems: modeling framework, mixed-integer bilevel fractional programming algorithm and shale gas application. Sustainable Chem. Eng. 5, 3362–3381.

Hjaila, K., Puigjaner, L., Lainez, J.M., Espuña, A., 2017. Integrated game-theory modeling for multi-enterprise-wide coordination and collaboration under uncertain competitive environment. Comput. Chem. Eng. 98, 209–235.

Kantor, I., Betancourt, A., Elkamel, A., Fowler, M., Almansoori, A., 2015. Generalized mixed-integer nonlinear programming modeling of eco-industrial networks to reduce cost and emissions. J. Cleaner Prod. 99, 160–176. doi:10.1016/j.jclepro.2015.03.017.

Lou, H.H., Kulkarni, M.A., Singh, A., Huang, Y.L., 2004. A game theory based approach for emergy analysis of industrial ecosystem under uncertainty. Clean Technol. Environ. Policy 6, 156–161.

Lovelady, E.M., El-Halwagi, M.M., 2009. Design and integration of eco-industrial parks for managing water resources. Environ. Progress Sustainable Energy 28, 265–272. doi:10.1002/ep.10326.

Maali, Y., 2009. A multiobjective approach for solving cooperative n-person games. Electr. Power Energy Syst. 31, 608–610.

Montastruc, L., Boix, M., Pibouleau, L., Azzaro-Pantel, C., Domenech, S., 2013. On the flexibility of an eco-industrial park (EIP) for managing industrial water. J. Cleaner Prod. 43, 1–11. doi:10.1016/j.jclepro.2012.12.039.

Nair, S.K., Guo, Y., Mukherjee, U., Karimi, I.A., Elkamel, A., 2016. Shared and practical approach to conserve utilities in eco-industrial parks. Comput. Chem. Eng. 93, 221–233. https://doi.org/10.1016/j.compchemeng.2016.05.003.

Peldschus, F., Zavadskas, E.K., 2005. Fuzzy matrix games multi-criteria model for decision making in engineering. Informatica 16, 107–120.

Preciado, J.E., Ortiz-Martinez, J.J., Gonzalez-Rivera, J.C., Sierra-Ramirez, R., Gordillo, G., 2012. Simulation of synthesis gas production from steam oxygen gasification of Colombian coal using Aspen Plus®. Energies 5, 4924–4940. doi:10.3390/en5124924.

Ramos, M.A., Boix, M., Aussel, D., Montastruc, L., Domenech, S., 2016. Water integration in eco-industrial parks using a multi-leader-follower approach. Comput. Chem. Eng. 87, 190–207.

Ramos, M.A., Boix, M., Aussel, D., Montastruc, L., Vilamajo, P., Domenech, S., 2015. Water exchanges in eco-industrial parks through multiobjective optimization and game theory. Comput. Aided Chem. Eng..

Ramos, M.A., Boix, M., Montastruc, L., Domenech, S., 2014. Multiobjective optimization using goal programming for industrial water network design. Ind. Eng. Chem. Res. 53, 17722–17735.

Rubio-Castro, E., Ponce-Ortega, J.M., Serna-González, M., El-Halwagi, M.M., 2012. Optimal reconfiguration of multi-plant water networks into an eco-industrial park. Comput. Chem. Eng. 44, 58–83. doi:10.1016/j.compchemeng.2012.05.004.

Tan, R.R., Aviso, K.B., 2012. An inverse optimization approach to inducing resource conservation in eco-industrial parks. In: 11th International Symposium on Process Systems Engineering, pp. 775–779.

Tawarmalani, M., Sahinidis, N.V., 2005. A polyhedral branch-and-cut approach to global optimization. Math. Program. 103, 225–249.

Theo, W.L., Lim, J.S., Wan Alwi, S.R., Rozali, N.E.M., Ho, W.S., Abdul-Manan, Z., 2016. An MILP model for cost-optimal planning of an on-grid hybrid power system for an eco-industrial park. Energy 116, 1423–1441. doi:10.1016/j.energy.2016.05.043.

Turaga, U.T., Ramanathan, R., Rajesh, K.S., Khanrah, A., Sa, B., 2003. Catalytic naphtha reforming: revisiting its importance in the modern refinery. J. Scientif. Ind. Res. 62, 963–978.

Von Stackelberg, H., 2010. Market structure and equilibrium. Springer Science and Business media, New York.

Wang, G., Feng, X., Chu, K.H., 2013. A novel approach for stability analysis of industrial symbiosis systems. J. Cleaner Prod. 39, 9–16.

Xu, M., Lunsford, J.H., Goodman, D.W., Bhattacharyya, A., 1997. Synthesis of dimethyl ether (DME) from methanol over solid-acid Catalysts. Appl. Catalysis A 149, 289–301. doi:10.1016/S0926-860X(96)00275-X.

Yeomans, H., Grossmann, I.E., 1999. A systematic modeling framework of superstructure optimization in process synthesis. Comput. Chem. Eng. 23, 709–731. doi:10.1016/S0098-1354(99)00003-4.
Yue, D., You, F., 2014. Game-theoretic modeling and optimization of multi-echelon supply chain design and operation under Stackelberg game and market equilibrium. Comput. Chem. Eng. 71, 347–361.
Yue, D., You, F., 2017. Stackelberg-game-based modeling and optimization for supply chain design and operations: a mixed integer bilevel programming framework. Comput. Chem. Eng. 102, 81–95.
Zhang, X., Strømman, A.H., Solli, C., Hertwich, E.G., 2008. Model-centered approach to early planning and design of an eco-industrial park around an oil refinery. Environ. Sci. Technol. 42, 4958–4963.