HAL open science

Assigning Official National Administration Unit Code to Vietnam GADM Shapefile 2018 at Ward Level

Hoai Son Nguyen, Minh Ha-Duong

To cite this version:

Hoai Son Nguyen, Minh Ha-Duong. Assigning Official National Administration Unit Code to Vietnam GADM Shapefile 2018 at Ward Level. [Research Report] 2018-70, CIRED CNRS. 2018. hal-01917034

HAL Id: hal-01917034

https://hal.science/hal-01917034v1

Submitted on 9 Nov 2018

HAL is a multi-disciplinary open access archive for the deposit and dissemination of scientific research documents, whether they are published or not. The documents may come from teaching and research institutions in France or abroad, or from public or private research centers.

L'archive ouverte pluridisciplinaire **HAL**, est destinée au dépôt et à la diffusion de documents scientifiques de niveau recherche, publiés ou non, émanant des établissements d'enseignement et de recherche français ou étrangers, des laboratoires publics ou privés.

Distributed under a Creative Commons Attribution - NonCommercial 4.0 International License

CIRED Working Paper
N° 2018-70 - Novembre 2018

Assigning Official National Administration Unit Code to Vietnam GADM Shapefile 2018 at Ward Level

Hoai-Son Nguyen, Minh Ha-Duong
hoaisonkt@gmail.com / minh.haduong@gmail.com

Abstract

This report assigns official national administration unit codes to Vietnam GADM Shapefile 2018 at ward level. The output is a new shapefile with official administration unit codes. These codes allow to join geographical data in shapefile with social-economic data to perform spatial econometric analysis or graph the map of social economic data at ward level. The assigning process finishes with 11,154 out of 11,163 wards (99.91%) assigned official admin codes.

CIRED

Centre international de recherche sur l'environnement et le développement
Unité mixte de recherche CNRS - ENPC - Cirad - EHESS - AgroParisTech
Site web: www.centre-cired.fr Twitter: @cired8568
Jardin Tropical -- 45bis, avenue de la Belle Gabrielle 94736 Nogent-sur-Marne Cedex

TECHNICAL REPORT

Assigning Official National Administration Unit Code to Vietnam GADM Shapefile 2018 at Ward Level

This report was prepared by:

Hoai-Son NGUYEN [1, 2]
Minh HA-DUONG [1, 3]

[1] Clean Energy and Sustainable Development Lab (CleanED), 18 Hoang Quoc Viet, Cau Giay, Ha Noi, Vietnam
[2] National Economics University (NEU), Vietnam
[3] International Research Center on Environment and Development (CIRED), National Center for Scientific Research (CNRS), France
Email: hoaisonkt@gmail.com; minh.haduong@gmail.com

With financial support from **Wellcome Trust Seed Awards**
Grant number 205764/Z/16/Z
"Assessing energy precarity and heat related health risks from climate change in subtropical Asian cities"
coordinated by Dr. Leslie Mabon, Robert Gordon University

Contents

List of figures 3
List of tables 4
Summary 5
Objective 5
Results 5
Output format 5
1 Introduction 7
2 Administration hierarchy, shape files and official nation administration list 8
2.1 Administration hierarchy in Vietnam 8
2.2 GADM shapefile 8
2.3 GSO list 10
3 Methods 12
3.1 Objectives 12
3.2 Mismatches classification and resolution 12
4 Results 13
4.1 Matching process 13
4.1.1 Normalize and check for candidate key 13
4.1.2 Deal with differences in writing style convention 13
4.1.3 Deal with administration changes 15
4.2 Matching results 16
5 Example of using shapefile with social economic data 17
6 Conclusion 19

List of figures

Figure 1. Report objectives 7
Figure 2. Administration hierarchy in Vietnam 8
Figure 3. Objectives of the report in detail 12
Figure 4. Method to assign cdd25 to each household 18

List of tables

Table 1. Shapefile and the corresponding Stata datasets 9
Table 2. The structure of the shapefile 9
Table 3. Example of records in shapefile 9
Table 4. Example of records in unnormalized form in shapefile – admin unit type in prarentheses ... 10
Table 5. Example of records in unnormalized form in shapefile – district type in prefix 10
Table 6. Structure of GSO list 2014 10
Table 7. Example of GSO list 2014 data 11
Table 8. Comparison of admin unit number between shapefile and GSO list 11
Table 9. Example of differences in writing style – Leading zeros in name 13
Table 10. Example of differences in writing style – Capitalization 13
Table 11. Example of differences in writing style – Tone marks position 14
Table 12. Example of differences in writing style – Others 15
Table 13. Example of administration changes – District changes 15
Table 14. Example of administration changes – Ward changes 15
Table 15. Matching results 16
Table 16. List of unmatched cases 17
Table 17. Example of final shapefile 17
Table 18. Data description of VHLSS and GHCN 18
Table 19. Structure of the final example data 19
Table 20. Pearson'R correlation between temperature and average monthly income in Vietnam, Jun 2014 19

Summary

Objective

Shapefile is an important source for spatial econometrics and visualization in analysis. Spatial econometrics requires to connect social-economic data with the geographical information of analysis units such as central longitudes, latitudes or polygon borders. Shapefile is the popular form to store that geographical data. The shapefile format stores the data on geometric shapes like points, lines, and polygons. These shapes, together with the social-economic data linked to each shape, generate a dataset for spatial econometrics and visualization.

As we wrote this, Global Administrative Areas (GADM) shapefile of Vietnam version 3.4 (GADM 2018) seems to be the best choice for researchers. First, the shapefile is free. Second, the version 3.4 is updated to April 2018. It is the most updated shapefile to this moment and is suitable for using with recent updated data such as Vietnam Living Standard Survey (VHLSS) 2016 or Enterprise Survey 2016. Under the condition that the official shapefile provided by Vietnamese government is not updated regularly and hard to access, the GADM shapefile turns to be the better choice.

However, the GADM shapefile has only the administration unit names but does not have administration unit codes. It poses a challenge in joining with social-economic data since these data in Vietnam use administration unit codes instead of unit names. Thus, this report aims to assign national administration unit codes to the GADM shapefile. The new shapefile is then available to plug in any social-economic data in Vietnam to perform spatial economic analysis.

We employ the official administration list from General Statistics Offices (GSO) 2014 (GSO 2015) as a medium to assign the admin code to shapefile. Shapefile has the name of each admin unit and geographical data of that unit. Social-economic data has data on each admin unit and the national code of that admin unit. GSO list has both national code and name of each admin unit. By joining the GSO list with the shapefile via admin unit name, we have new shapefile including not only admin unit names and geographical data but also admin unit codes which can serve as a key to join with social economic data later.

Results

The assigning process is done by constructing a map table. The map table includes matched cases in admin unit names in shapefile and GSO list. The map table is filled in in three phases. The first is after the normalization of both files to ensure that each field contains only one information. The second is after dealing with differences in writing styles. The last one is after adjusting for administration changes from 2014 – the year of GSO list and 2018 – the year of shapefile.

In the map table, 11,154 out of 11,170 wards (99.86%) are matched between GADM shapefile and GSO list. Only 16 cases are not matched in which 9 cases are from shapefile and 7 cases are from GSO list. Thus, in the new shapefile, we assigned national code to 11,154 wards out of total 11,163 wards (99.91%) in the original GADM shapefile.

Output format

All the outputs are stored in a zip file named "vnshp.zip". The zip file has three folders and a license file.

- The "VN shapefile" folder stores new shapefile in shapefile format including vnshp.dbf, vnshp.shp and vnshp.shx.
- The "Supplementary" folder stores (i) the map table in csv format, (ii) Stata do file (script) for matching process, (iii) Example folder storing data and script of example of using new shapefile.

The shapefile is constructed under financial support from Wellcome Trust Seed Awards. The license of the shapefile is according to the Attribution – NonCommercial 4.0 Generic (CC BY – NC 4.0) of Creative Commons (Creative Commons Accessed 2018-07-18). You are free to copy and

redistribute the material in any medium or format as well as remix, transform, and build upon the material. The license is under the term that (i) You must give appropriate credit, provide a link to the license, and indicate if changes were made. You may do so in any reasonable manner, but not in any way that suggests the licensor endorses you or your use. And (ii) You may not use the material for commercial purposes.

Introduction

Shapefile is a useful source for spatial econometrics and visualization in analysis. Spatial econometrics require to connect social-economic data with the location of analysis units such as central longitudes, latitudes or polygon borders. In a social economic dataset, each analysis unit has data on the name or official code of its related administration unit. Meanwhile, shapefiles consist of a list of administration units with their location. Merging social economic data with shapefile is done by matching administration unit name or code.

Currently, Vietnam has two sources of shapefile including official and free sources. The official shape file has full information of administration units including location, names and official national codes which match with the admin unit code in national surveys. However, this source is hard to access. In addition, the shapefile is not updated regularly. The most updated official shapefile we can access is from 2008. The shapefile did not catch up with the changes in administration units from 2008 to present. In addition, the national admin code in that shapefile followed older system which already change after 2008. Thus, the shape file is no longer suitable for analysis with social economic data after 2008.

By contrast, the free sources have more updated shapefiles. To our best knowledge, the best free source of shapefile so far is Global Administrative Areas (GADM). The most updated shapefile of Vietnam in GADM is April 2018 which is suitable for using with recent updated data such as Vietnam Living Standard Survey (VHLSS) 2016 or Enterprise Survey 2016. However, the free shapefile has the list of administration unit names but official codes. The lack of official admin code imposes a challenge in merging with social economic data. In this case, the shapefile has admin units' name and location data. Meanwhile, survey data normally has the admin units' official codes and social-economic data. Merging the two datasets needs to match admin unit names in shapefile with admin unit codes in survey data.

This report aims to improve the free GADM shapefile by assigning administration official code to the file. We perform the task by utilizing the official administration list issued by General Statistics Office (GSO). The official list contains both administration unit names and codes. Merging the list with shapefile by admin unit name results in a new shapefile having admin unit codes. The new shapefile is then able to merge with any survey data which has admin unit code only.

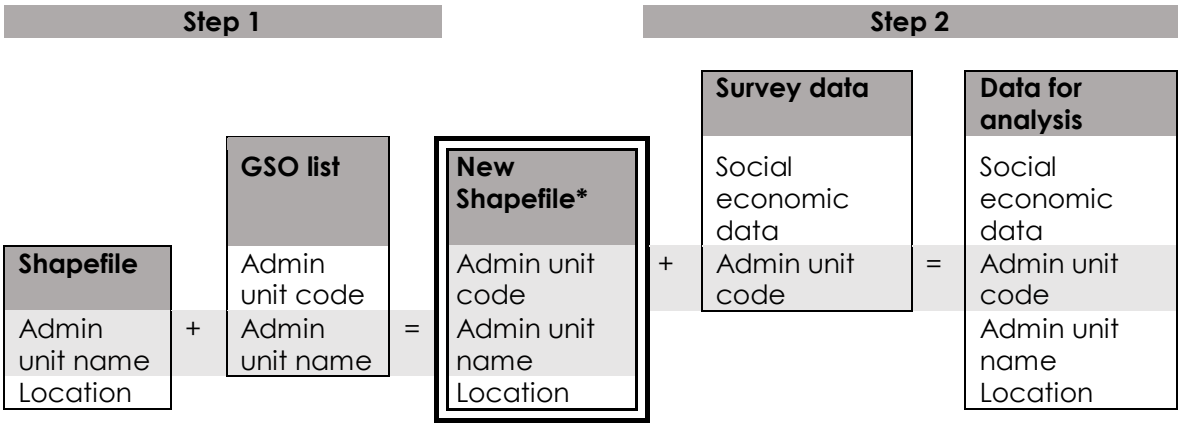

Note. * New shapefile is the output of the report
Figure 1. Report objectives
Source: Authors compiled.

This report focuses on shapefile at ward level. The GSO list at Dec 31, 2014 is employed for the report. All data processing is done with Stata 14. The report contains six parts. The first is the introduction. The second is a brief review on Vietnam administration hierarchy as well as GSO list and GADM shapefile. The third part describes the methods assigning admin unit code from GSO list to shapefile. The forth is the result following by a small example of how to use the new shapefile with survey data. The last part is a conclusion.

Administration hierarchy, shape files and official nation administration list

Administration hierarchy in Vietnam

The administration hierarchy in Vietnam includes 3 tiers (Vietnamese National Assembly 2013, 2015)

- 1st tier is city level including Province/Municipality
- 2nd tier is district level including urban/rural district, town, Provincial city, Municipality city
- 3rd tier is ward level including ward, commune, township

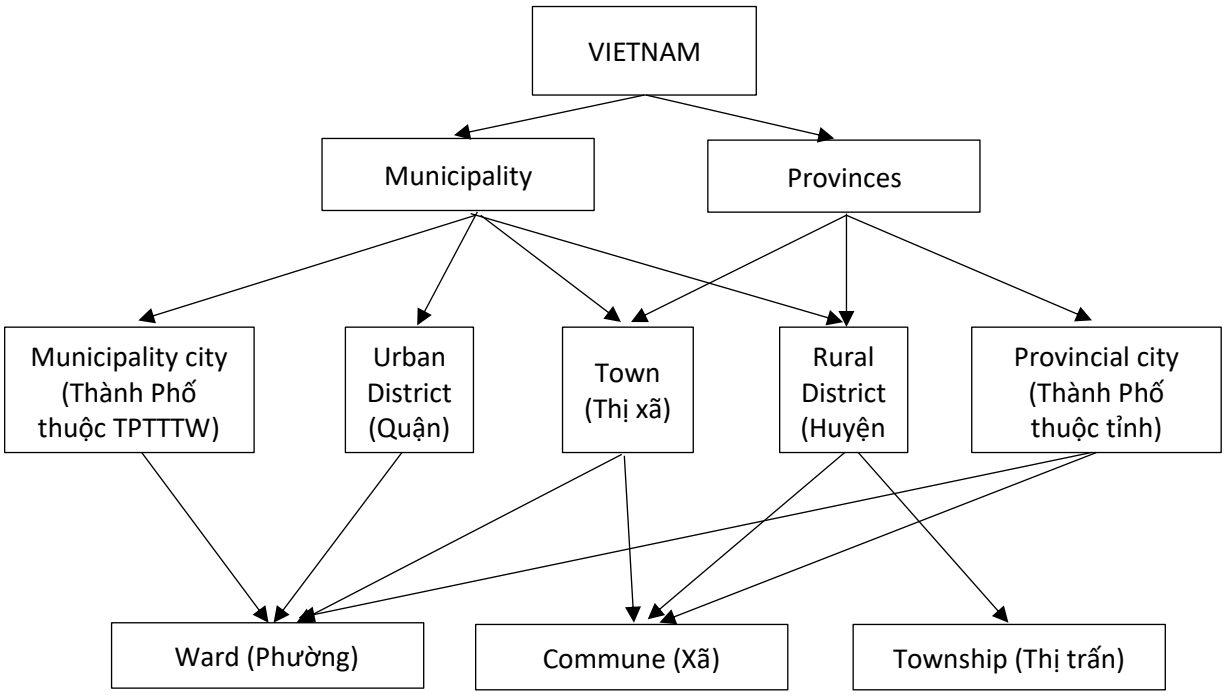

Figure 2. Administration hierarchy in Vietnam
Source: Author compiled

GADM shapefile

The most updated GADM shapefile is version 3.4, April 2018. The original GADM shape at ward level include five files with the same name "gadm36_VNM_3" with different suffixes including .shp, .dbf, .shx, .prj and .cpg (GADM 2018). We only need two files with the suffixes of .dbf an .shp. The .shp file contains the geometry data of each wards with a list of its vertices. The .dbf file contains wards' attributes with one record per ward. The relationship between the twofile is one-to-one based on record number. Attribute records in the dbf file must be in the same order as records in the shp file (Environmental Systems Research Institute 1998).

For the convenience in processing data with Stata, the original shapefile is converted to Stata datasets by a user-written command shp2dta (Crow 2015). The converted process is detail in following Table 1.

	Shapefile	Stata dataset converted	Description
1	Gadm36_VNM_3.shp	vncoord_centroids.dta	Wards' polygon data
2	Gadm36_VNM_3.dbf	vndb_centroids.dta	Wards' attribute including central longitude and latitude

Table 1. Shapefile and the corresponding Stata datasets
Source: Authors compiled.

The vndb_centroids.dta file covers general attributes of each ward. The vncoord_centroids.dta has information of the polygon information of the ward in term of the ward vertices longitude and latitude. The two files are connected by a field named "id" in former which is correspond to the values taken on by variable _ID in the latter. Since we focus on assigning national code to each ward, from hereafter we operate everything in the vndb_centroids file. From hereafter, the shapefile means the vndb_centroids file.

Fields	Description
id	Area ID to connect with vncoord_centroids – the polygon file
x_center	x-coordinate of area centroid (central longitude)
y_center	y-coordinate of area centroid (central latitude)
country	Country name
city	City name
district	District name
ward	Ward name
wardtype	Ward type

Note. Fields in bold are primary key
Table 2. The structure of the shapefile
Source: Authors compiled

In the shapefile, each record describes attributes of a single ward. There are two ways to characterize the identity of each ward (each row). By definition, "id" field is the first one. The "id" is unique for each row. By nature, the combination of "city, district, ward and ward type" is the second one. The file does not have two distinct rows having the same values for these four attributes. There is also no proper subset of these four attributes for which the above condition holds.

We have two candidate keys for the file. However, the "id" field is for polygon file connection purpose only. It is not the ward national official code nor presented in GSO list. Thus, the combination of "city, district, ward, wardtype" is selected as the primary composite key for the file.

id	city	district	ward	wardtype	x_center	y_center
1	An Giang	An Phú	An Phú	Thị trấn	105.0868	10.79434
2	An Giang	An Phú	Đa Phước	Xã	105.1162	10.74601
3	An Giang	An Phú	Khánh An	Xã	105.108	10.94508

Table 3. Example of records in shapefile
Source: Authors compiled

It should be noted that the shapefile is not normalized in term that each field contain only one information. Some ward or district name includes the ward type, district type in parentheses. These cases are for two wards/district having same name in a same district/city but differing ward type/district type.

Id	City	District	Ward	Wardtype
208	Bạc Liêu	Phước Long	Phước Long (Thị trấn)	Thị trấn
209	Bạc Liêu	Phước Long	Phước Long (Xã)	Xã
2301	Đồng Tháp	Hồng Ngự	Thường Thới Tiền	Xã
2302	Đồng Tháp	Hồng Ngự (Thị xã)	An Bình A	Xã

Table 4. Example of records in unnormalized form in shapefile – admin unit type in prarentheses
Source: Author compiled.

Besides, in shapefile all the district names do not include district type in prefix but Bắc Kạn district name.

Id	City	district	ward
567	Bắc Kạn	Thành Phố Bắc Kạn	Đức Xuân
568	Bắc Kạn	Thành Phố Bắc Kạn	Dương Quang

Table 5. Example of records in unnormalized form in shapefile – district type in prefix
Source: Author compiled.

The national training center is a special admin unit. It is a military area and does not belong to any ward.

GSO list

In this report, we assign admin code of 2014 from GSO (2015) to the shapefile.

Fields	Description
ward_code	**Wards' National code**
district_code	Districts' National code
city_code	City national code
ward	Ward name
district	District name
city	City name
wardtype	Ward type

Table 6. Structure of GSO list 2014
Source: Authors compiled

In the GSO list, each record describes a ward including ward name, ward type, the district and the city where the ward locates. Each ward, district and city name have a corresponding national admin code. The field ward_code is the primary key for the file. There are no two distinct rows having the same values of ward_code.

ward _code	district _code	city _code	Ward	district	city	wardtype
1	1	1	Phường Phúc Xá	Quận Ba Đình	Thành phố Hà Nội	Phường
4	1	1	Phường Trúc Bạch	Quận Ba Đình	Thành phố Hà Nội	Phường
6	1	1	Phường Vĩnh Phúc	Quận Ba Đình	Thành phố Hà Nội	Phường
7	1	1	Phường Cống Vị	Quận Ba Đình	Thành phố Hà Nội	Phường

Table 7. Example of GSO list 2014 data
Source: Authors compiled.

Table 7 shows that the data in GSO list is not normalized. All the fields of ward, district and city are not atomic. The fields include both admin unit names and admin unit types. For example, the ward in in the first row is "Phường Phúc Xá". The first part "Phường" is ward type which mean "a ward" as in Figure 2. The second part "Phúc Xá" is the ward name which is like ward name in shapefile. Similarly, the district in the first row is "Quận Ba Đình". The part "Quận" means "Urban district" and "Ba Đình" is the name of the district.

If the fields are normalized, we have a foreign key to join with the shapefile. The normalization is to separate the admin unit type from the admin unit name in each filed. We have four new fields of city, district, ward and ward type which is the same the primary composite key in the shapefile. Thus, the four new fields can act as a foreign composite key in joining with the shape file.

The new four fields are also a candidate key. There are no two records having the same value of the four fields. In that case, the relationship between the shapefile and the GSO list is one-to-one on the four fields basis. It allows to assign each ward code in GSO list to a corresponding one and only one ward id in the shapefile.

Table 8 below compares statistic of shapefile and GSO list according to the administration hierarchy.

Admin unit	Shapefile	GSO 2014 list
City level: Provinces and Municipalities	63	63
District level: Municipality cities, Urban districts, Towns, Rural Districts and Provincial cities	710	704
Ward level: Wards, Communes, Townships and other	11,163	11,161
Ward	1,568	1,545
Commune	8,972	9,001
Town	601	615
Island	2	
National Training Center	2	

Table 8. Comparison of admin unit number between shapefile and GSO list
Source: Authors compiled

Methods

Objectives

The report assigns national admin codes including city code, district code, ward code to shapefile. The output is the new shapefile that have the structure as in Figure 3 below.

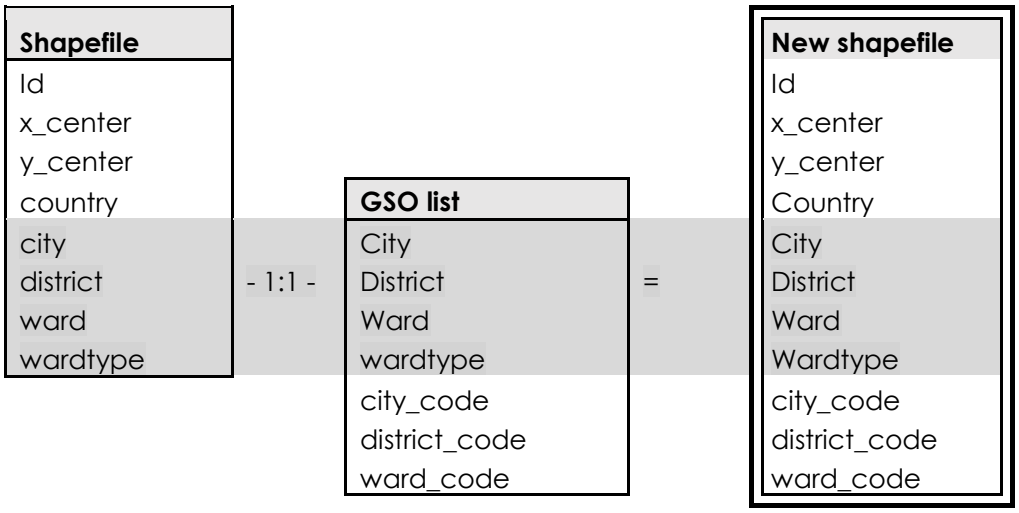

Figure 3. Objectives of the report in detail
Source: Authors compiled

Mismatches classification and resolution

We merge the shapefile with GSO list by matching the combination of city, district, ward and wardtype at each file. There are three possibilities where unmatched cases arise. We resolve them in this order.

- The first are the mismatches due to unnormalized form of the four fields in both files as mentioned in section 2.
- The second are the mismatches due to differences in writing style convention. This come from the fact that all the four fields are in string format.
- The third are the mismatches due to the administration changes. The GSO list is for 2014 while the shapefile is for 2018. From 2014 to 2018, some administration changes can arise such as changes in ward name, ward type or transfer from one district to another.

Thus, we propose overall organization of the procedure (implemented in Stata) to match shapefile and GSO list.

- Normalize both the shapefile and GSO list as indicated in section 2. The rule of thumb is that a field should contain only one attribute value, and not include the values of another field. In shape file, the ward type and district type are in parentheses removed from the ward name and district name. In GSO list, administration unit type is separated from admin unit name. In both files, the normalized "city, district, ward and wardtype" are stored in four new fields.
- Check that the normalized fields in both files are candidate key. The combination of the four fields are non-zero and unique.
- Initialize a map table with 10 columns. Four columns are for the normalized keys from GSO, four for the normalized keys from GADM, one for mismatches classification and one for comment. Determining the matching keys. Adding all the matches to the map table.

- Deal with the rows in GSO and GDAM files that are not in the map table. We match them manually case by case and add them to the map table.
  - We solve for cases of differences in writing style first.
  - Administration change cases are solved last with supported legal documents. Ideally, the changes in administration should be fill firstly in the map table since they are deterministic. However, we can only do that if we have full information on administration changes from 2014 to 2018 at the beginning. That seems impossible to get. Therefore, we search for changes in admin unit case by case after solving all unmatched cases that we have more information.

- Use the map table to assign the ward codes, district code and city code to the shapefile

Results

Matching process

1.1.1 Normalize and check for candidate key

After normalization, checking procedure confirms that all new four files of city district ward wardtype of the two files still are candidate key. They are non-zero and unique in both files. After normalization, there are 10,953 cases are matched by normalized key. There are 418 unmatched cases, in which 210 cases are from shapefile and 208 cases from GSO list.

1.1.2 Deal with differences in writing style convention

In dealing with differences in writing style, we found that the differences are categorized to (i) leading zero in name; (ii) capitalization; (iii) tone marks position and (iv) others. Below are examples of those mismatch categories.

(i) Leading zeros in name

The ward/district names in GSO list are in form of 2 digits such as "01" if the names are numeric. Meanwhile, the name in shp has no leading zero such as "1"

File	Ward	Wardtype	district	city
Gso	06	Phường	Quận 4	Hồ Chí Minh
Shp	1	Phường	Quận 10	Hồ Chí Minh

Table 9. Example of differences in writing style – Leading zeros in name
Source: Author compiled.

(ii) Capitalization

Some mismatched cases come from the differences in upper and lower cases as the following example.

File	ward	Wardtype	District	city
gso	Đại Áng	Xã	Thanh Trì	Hà Nội
shp	Đại áng	Xã	Thanh Trì	Hà Nội

Table 10. Example of differences in writing style – Capitalization
Source: Author compiled.

(iii) Tone marks position

The unmatched cases come from the differences in the position of tone marks. According to Wikipedia (Accessed 2018-07-18), in Vietnamese:

In syllables where the vowel part consists of more than one vowel (such as diphthongs and triphthongs), the placement of the tone is still a matter of debate. Generally, there are two methodologies, an "old style" and a "new style". While the "old style" emphasizes aesthetics by placing the tone mark as close as possible to the center of the word (by placing the tone mark on the last vowel if an ending consonant part exists and on the next-to-last vowel if the ending consonant doesn't exist, as in hóa, hủy), the "new style" emphasizes linguistic principles and tries to apply the tone mark on the main vowel (as in hoá, huỷ). In both styles, when one vowel already has a quality diacritic on it, the tone mark must be applied to it as well, regardless of where it appears in the syllable (thus thuế is acceptable while thúê is not). In the case of the ươ diphthong, the mark is placed on the ơ. The u in qu is considered part of the consonant. Currently, the new style is usually used in textbooks published by Nhà Xuất bản Giáo dục, while most people still prefer the old style in casual uses.

File	Ward	Wardtype	District	City
Shp	Hoà Long	Xã	Bà Rịa	Bà Rịa - Vũng Tàu
Gso	Hòa Long	Xã	Bà Rịa	Bà Rịa - Vũng Tàu
Shp	Phước Hoà	Xã	Tân Thành	Bà Rịa - Vũng Tàu
Gso	Phước Hòa	Xã	Tân Thành	Bà Rịa - Vũng Tàu
Shp	Tân Hoà	Xã	Tân Thành	Bà Rịa - Vũng Tàu
Gso	Tân Hòa	Xã	Tân Thành	Bà Rịa - Vũng Tàu

Table 11. Example of differences in writing style – Tone marks position
Source: Author compiled.

(iv) Others

The differences in this category mainly comes from the differences in transcription across ethnic group in Vietnamese. In these cases, the ward names have the same pronunciation but different in transcription such as “Bắc Ngà” and “Pắc Ngà”. These cases normally happen in mountain areas where there are many ethnic group live. The manual matching for the cases is not hard for Vietnamese but is difficult for foreign researchers. There are 22 out of 32 unmatched cases in category “Others” are due to the reason. The other cases are due to Roman numerals, blank space related mismatch or irregular character in ward name.

File	city_norm	district_norm	ward_norm	wardtype_norm	Note
shp	Cà Mau	Cà Mau	Tân Thành ()	Phường	Have parentheses in names
gso	Cà Mau	Cà Mau	Tân Thành	Phường	
shp	Gia Lai	Đăk Đoa	H'Neng	Xã	Blank space after apostrophe
gso	Gia Lai	Đăk Đoa	H' Neng	Xã	
shp	Đồng Tháp	Lấp Vò	Tân Khánh Trung	Xã	Redundant blank space between words
gso	Đồng Tháp	Lấp Vò	Tân Khánh Trung	Xã	
shp	Gia Lai	Mang Yang	Hà Ra	Xã	Same pronunciation but different transcription
gso	Gia Lai	Mang Yang	Hra	Xã	
shp	Sơn La	Bắc Yên	Bắc Ngà	Xã	
gso	Sơn La	Bắc Yên	Pắc Ngà	Xã	
shp	Sóc Trăng	Mỹ Xuyên	Hòa Tú 2	Xã	Roman numerals
gso	Sóc Trăng	Mỹ Xuyên	Hòa Tú II	Xã	

Table 12. Example of differences in writing style – Others
Source: Author compiled.

1.1.3 Deal with administration changes

During the period from 2014 to 2018, there are some administration changes. There is no change in city level. The changes are only at district and ward level. At district level, some districts changed their names, some were created from existing wards.

Shp				gso				
city	district	ward	wardtype	city	district	ward	wardtype	Legal documents
Bình Phước	Phú Riềng	Bình Sơn	Xã	Bình Phước	Bù Gia Mập	Bình Sơn	Xã	Nghị quyết 931/NQ-UBTVQH ngày 15/5/2015
Bình Phước	Phú Riềng	Bình Tân	Xã	Bình Phước	Bù Gia Mập	Bình Tân	Xã	Nghị quyết 931/NQ-UBTVQH ngày 15/5/2015

Table 13. Example of administration changes – District changes
Source: Author compiled.

At ward level, some ward types changed such as from commune/town to wards. Some wards change their name going with changes in their type.

Shp				gso				
city	district	Ward	wardtype	city	district	ward	wardtype	Legal documents
Bạc Liêu	Giá Rai	1	Phường	Bạc Liêu	Giá Rai	Giá Rai	Thị trấn	Nghị quyết 930 ngày 15/5/2015
Bạc Liêu	Giá Rai	Hộ Phòng	Phường	Bạc Liêu	Giá Rai	Hộ Phòng	Thị trấn	Nghị quyết 930 ngày 15/5/2015
Quảng Nam	Điện Bàn	Điện Dương	Phường	Quảng Nam	Điện Bàn	Điện Dương	Xã	Quyết định số 889/NQ-UBTVQH13 ngày 11/3/2015

Table 14. Example of administration changes – Ward changes
Source: Author compiled.

Matching results

With the four fileds of original files, there is no single matched case between GSO and Shapefile. After normalizing the databases format, 10,953 row pairs match. Resolving differences in writing style match another 141 row pairs. Accounting for administration changes match another 60. In total, 11,154 wards are matched. There are only 16 wards do not match, in which nine wards are from shape file and seven wards from GSO list.

Type of matched cases	Count	Percentage
Normalization	**10,953**	**98.06%**
Atomic normalization	10,953	98.06%
Differences in writing styles	**141**	**1.27%**
Leading zero in names	90	0.81%
Capitalization	8	0.07%
Tone mark position	10	0.09%
Others	33	0.30%
Administration changes	**60**	**0.53%**
Ward changes	35	0.31%
District changes	25	0.22%
Unmatched cases	**16**	**0.14%**
Unmatched	16	0.14%
Total	**11,170**	**100.00%**

Table 15. Matching results
Source: Author compiled.

Table 16 below shows the list of unmatched cases.

File	id	City	Distric	ward	wardtype
Shp	315	Bắc Giang	Lục Ngạn	Cấm Sơn	Trung tâm huấn luyện
Shp	350	Bắc Giang	Sơn Động	Cấm Sơn	Trung tâm huấn luyện
Shp	3096	Hải Phòng	Bạch Long Vĩ	Bạch Long Vĩ	Đảo
Shp	3314	Hậu Giang	Long Mỹ	Bình Thạnh	Phường
Shp	3320	Hậu Giang	Long Mỹ	Thuận An	Phường
Shp	3322	Hậu Giang	Long Mỹ	Vĩnh Tường	Phường
Shp	8515	Quảng Trị			
Shp	10556	Trà Vinh	Duyên Hải	1	Phường
Shp	10557	Trà Vinh	Duyên Hải	2	Phường
Gso		Hậu Giang	Long Mỹ	Long Mỹ	Thị trấn
Gso		Khánh Hòa	Trường Sa	Sinh Tồn	Xã
Gso		Khánh Hòa	Trường Sa	Song Tử Tây	Xã
Gso		Khánh Hòa	Trường Sa	Trường Sa	Thị trấn
Gso		Thanh Hóa	Nông Cống	Minh Thọ	Xã
Gso		Thanh Hóa	Đông Sơn	Đông Xuân	Xã
Gso		Trà Vinh	Duyên Hải	Duyên Hải	Thị trấn

Table 16. List of unmatched cases
Source: Author compiled.

The final updated shape file has the structure as the following.

id	x_center	y_center	ward _code	district _code	city _code	ward	wardtype	district	city
3497	106.7295	10.77221	27184	771	79	Phường 1	Phường	Quận 10	Hồ Chí Minh
3512	106.6499	10.75614	27247	772	79	Phường 1	Phường	Quận 11	Hồ Chí Minh
3550	106.5956	10.76355	27160	770	79	Phường 1	Phường	Quận 3	Hồ Chí Minh
3564	106.6545	10.7518	27298	773	79	Phường 1	Phường	Quận 4	Hồ Chí Minh
3579	106.6694	10.75343	27325	774	79	Phường 1	Phường	Quận 5	Hồ Chí Minh

Table 17. Example of final shapefile
Source: Author compiled.

Example of using shapefile with social economic data

The shapefile now has national administration codes. These codes are the key to plug social-economic data to shapefile. This part describes a small example of using shapefile and VHLSS with the national codes.

Suppose we doubt that in Vietnam, poor households live in hot areas in summer. If the hypothesis is true, it may suggest that the poor households are more vulnerable during summer thus, facing higher level of welfare inequality.

To check the hypothesis, we calculate the correlation between households' income per capita and the Cooling Degree Day (CDD) that the household face in June 2014 for simplicity. CDD is the amount of temperature that need to be cooled down to reach a certain base temperature for every day of

a month. The higher CDD of an area is, the hotter the weather of the area is. In this example, 25^{0}C is chosen as the base. The formula of cdd25 is the following

Cdd25 = ∑(tavg-25) for all days of a month which have average daily temperature (tvag) higher than 25oC.

The data on household income per capita is extracted from VHLSS 2014. The data on temperature to calculate cdd25 comes from Global Historical Climatology Network (GHCN) of National Centers for Environmental Information (NOOA); GHCN provides daily temperature of 15 weather stations across Vietnam.

VHLSS data on income		GHCN data on temperature	
Variable	**Description**	**Variable**	**Description**
tinh	GSO code of province (city_code)	station	Station code
huyen	GSO code of district (district_code)	name	Station name
xa	GSO code of ward (ward_code)	latitude	Latitude of the station
diaban	Enumerator Area	longitude	Longitude of the station
hoso	Household number	cdd25*	Cooling degree day at 25^{0}C
inc_month	Average monthly Income per capita		

Note. * original GHCN provide data on daily temperature, cdd25 is calculated based on the temperature
Table 18. Data description of VHLSS and GHCN
Source: Author compiled.

Our mission is to assign cdd25 on GHCN data to each household in VHLSS. We employ shape file to carry out the task. The method contains two steps detailed in Figure 3. The step 1 is proximity matching. The y-center and x-center are the latitude and longitude of the central point of each ward which together determine the position of the ward. For each ward, we calculate the distance from the ward to each station and choose the cdd25 of the nearest station as the cdd25 of the ward. The distance is calculated basing on latitude and longitude. The second step is merging the ward with cdd25 to each household to get household income. It should be noted that city_code, district_code and ward_code in shapefile are tinh, huyen, xa in VHLSS corresponding.

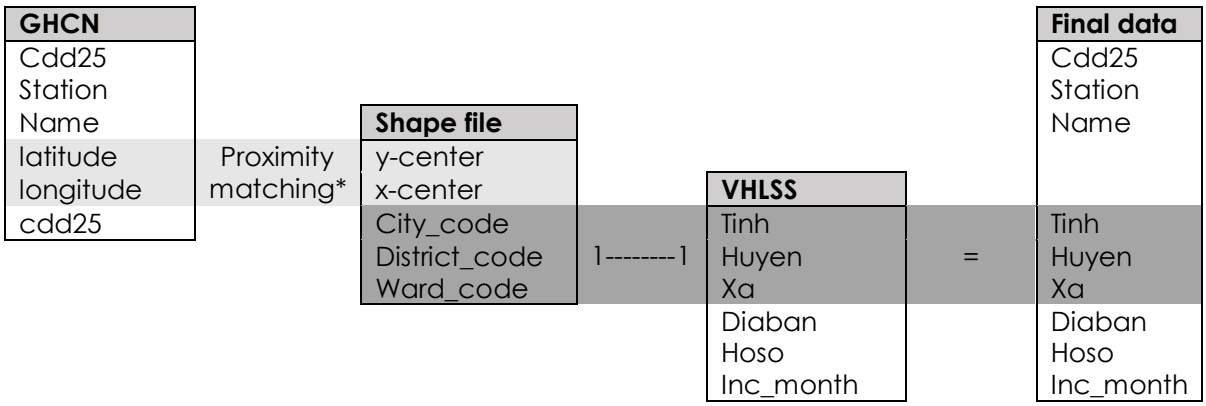

Figure 4. Method to assign cdd25 to each household
Source: Authors compiled

The Stata code for method in Figure 3 is provided in appendix B. The final data has the structure as the following.

Variable	Description
Station	Station code
Name	Station name
Cdđ25	Cooling degree day at the base of 25
Id	Id to merge with the polygon file
Tinh	GSO code of province
City	City name
Huyen	GSO code of district
District	District name
Xa	GSO code of ward
Ward	Ward name
Wardtype	Ward type
Diaban	Enumerator Area
Hoso	Household number
In_month	Average monthly Income per capita

Table 19. Structure of the final example data
Source: Authors compiled

With the above data, we can calculate the correlation between temperature and household income. Roughly speaking, we find no evidence for the hypothesis that in Vietnam, poor households live in hot areas.

	cdd25	inc_month
cdd25	1	
inc_month	0.0020 (0.8489)	1

Note. Number in parentheses is p-value.
Table 20. Pearson'R correlation between temperature and average monthly income in Vietnam, Jun 2014

Conclusion

In this report we assign official administration code to shapefile from GADM. As we wrote this, the GADM shapefile is the free and the most updated shapefile. However, it does not have official admin code for each admin unit. Without the admin code, data from shapefile cannot join with social economic data for analysis. Thus, we employ the official administration list from GSO 2014 as a medium to perform the task.

The assigning process was done by constructing a map table. The map table includes matched cases in admin unit names in shapefile and admin unit names in GSO list. The map table is filled in in three phases. The first is after the normalization of both files to ensure that each field contains only one information. The second is after dealing manually with differences in writing styles. The last one is after adjusting for administration changes from 2014 – the year of GSO list and 2018 – the year of shapefile. After the assigning process, there are 11,154 out of 11,163 wards (99.91%) assigned official admin codes. Only 16 cases are not matched between the shapefile and GSO list in which 9 cases are from shapefile.

The new shapefile with the official administration unit code are now available to plug in any social economic data in Vietnam. It can save time for researchers in doing spatial econometrics or graphing social-economic data at ward level. It is particularly useful for foreign researchers in analyzing Vietnamese data with shapefile since they do not have to match case by case manually in Vietnamese.

Though we already assigned ward codes to 99.91% of original GADM shapefile, we still have three points to improve in future. First, we only assigned GSO code at 2014 to the shape file. The reason is that GSO code 2014 is old enough to use with social-economic data at 2012 and at the same time, is updated enough to use with the lastest data at 2016. But soon, GSO codes at 2014 will be outdated when social-economic data for 2018 comes out. Thus, in next version, we will add GSO code at 2016 and 2018 to the shapefile.

Second, we matched manually some cases that is differences in writing stypes while these cases should be matched by program script. In this report, it is reasonable since the number of cases in this category is relatively small. There are 51 cases in total including 8 cases of capitalization, 10 cases of tone mark position and 33 special cases. However, in the next version, when the number of unmatched cases in this category may increase, we will develop script to handle these cases.

Finally, there are still 16 unmatched cases in which nine come from the original GADM shapefile. We highly appreciate any comment or feedback that help us to solve the unmatched cases. Please let us know if you have any idea on the issue. Thank you in advance for your support!

References

Creative Commons. n.d. "Attribution-NonCommercial 4.0 International (CC BY-NC 4.0)." Accessed July 18, 2018. https://creativecommons.org/licenses/by-nc/4.0/.

Crow, Kevin. 2015. *SHP2DTA: Stata Module to Converts Shape Boundary Files to Stata Datasets*. https://EconPapers.repec.org/RePEc:boc:bocode:s456718.

Environmental Systems Research Institute. 1998. "ESRI Shapefile Technical Description." ESRI White Paper. Environmental Systems Research Institute. https://www.esri.com/library/whitepapers/pdfs/shapefile.pdf.

GADM. 2018. "GADM Shapefile of Vietnam. Version 3.4." Global Administrative Areas (GADM). https://biogeo.ucdavis.edu/data/gadm3.6/shp/gadm36_VNM_shp.zip.

GSO. 2015. "GSO List of Administratinon Unit at Dec 31 2014." General Statistics Office Of Vietnam (GSO). https://www.gso.gov.vn/dmhc2015/.

Vietnamese National Assembly. 2013. *Vietnam's 2013 Constitution*. http://moj.gov.vn/vbpq/lists/vn%20bn%20php%20lut/view_detail.aspx?itemid=28814.

———. 2015. *Law on organizing the local government*. *77/2015/QH13*. https://thuvienphapluat.vn/van-ban/Bo-may-hanh-chinh/Law-No-77-2015-QH13-organizing-the-local-Government-284413.aspx.

Wikipedia. n.d. "Vietnamese Alphabet." Wikipedia. Accessed July 18, 2018. https://en.wikipedia.org/wiki/Vietnamese_alphabet#Tone_marks.

***Appendix A*. The list of manual matching cases in map table**.

shp_city_norm	shp_district_norm	shp_ward_norm	shp_wardtype_norm	gso_city_norm	gso_district_norm	gso_ward_norm	gso_wardtype_norm	type	comment
Bà Rịa - Vũng Tàu	Bà Rịa	Hòa Long	Xã	Bà Rịa - Vũng Tàu	Bà Rịa	Hoà Long	Xã	4	
Bà Rịa - Vũng Tàu	Tân Thành	Phước Hòa	Xã	Bà Rịa - Vũng Tàu	Tân Thành	Hoà	Xã	4	
Bà Rịa - Vũng Tàu	Tân Thành	Tân Hòa	Xã	Bà Rịa - Vũng Tàu	Tân Thành	Tân Hoà	Xã	4	
Bình Phước	Phú Riềng	Bình Sơn	Xã	Bình Phước	Bù Gia Mập	Bình Sơn	Xã	6	Nghị quyết 931/NQ-UBTVQH ngày 15/5/2015
Bình Phước	Phú Riềng	Bình Tân	Xã	Bình Phước	Bù Gia Mập	Bình Tân	Xã	6	Nghị quyết 931/NQ-UBTVQH ngày 15/5/2015
Bình Phước	Phú Riềng	Bù Nho	Xã	Bình Phước	Bù Gia Mập	Bù Nho	Xã	6	Nghị quyết 931/NQ-UBTVQH ngày 15/5/2015
Bình Phước	Phú Riềng	Long Bình	Xã	Bình Phước	Bù Gia Mập	Long Bình	Xã	6	Nghị quyết 931/NQ-UBTVQH ngày 15/5/2015
Bình Phước	Phú Riềng	Long Hà	Xã	Bình Phước	Bù Gia Mập	Long Hà	Xã	6	Nghị quyết 931/NQ-UBTVQH ngày 15/5/2015
Bình Phước	Phú Riềng	Long Hưng	Xã	Bình Phước	Bù Gia Mập	Long Hưng	Xã	6	Nghị quyết 931/NQ-UBTVQH ngày 15/5/2015
Bình Phước	Phú Riềng	Long Tân	Xã	Bình Phước	Bù Gia Mập	Long Tân	Xã	6	Nghị quyết 931/NQ-UBTVQH ngày 15/5/2015
Bình Phước	Phú Riềng	Phú Riềng	Xã	Bình Phước	Bù Gia Mập	Phú Riềng	Xã	6	Nghị quyết 931/NQ-UBTVQH ngày 15/5/2015
Bình Phước	Phú Riềng	Phú Trung	Xã	Bình Phước	Bù Gia Mập	Phú Trung	Xã	6	Nghị quyết 931/NQ-UBTVQH ngày 15/5/2015
Bình Phước	Phú Riềng	Phước Tân	Xã	Bình Phước	Bù Gia Mập	Phước Tân	Xã	6	Nghị quyết 931/NQ-UBTVQH ngày 15/5/2015
Bạc Liêu	Giá Rai	1	Phường	Bạc Liêu	Giá Rai	Giá Rai	Thị trấn	5	Nghị quyết 930 ngày 15/5/2015

Bạc Liêu	Giá Rai	Hộ Phòng	Phường	Bạc Liêu	Giá Rai	Hộ Phòng	Thị trấn	5	Nghị quyết 930 ngày 15/5/2015
Bạc Liêu	Giá Rai	Láng Tròn	Phường	Bạc Liêu	Giá Rai	Phong Thạnh Đông A	Xã	5	Nghị quyết 930 ngày 15/5/2015
Bắc Giang	Lục Ngạn	Cấm Sơn	Trung tâm huấn luyện					8	
Bắc Giang	Sơn Động	Cấm Sơn	Trung tâm huấn luyện					8	
Bắc Kạn	Bắc Kạn	Huyền Tụng	Phường	Bắc Kạn	Bắc Kạn	Huyền Tụng	Xã	5	Nghị quyết 892/NQ-UBTVQH13 ngày 11/3/2015
Bắc Kạn	Bắc Kạn	Xuất Hóa	Phường	Bắc Kạn	Bắc Kạn	Xuất Hoá	Xã	5	Nghị quyết 892/NQ-UBTVQH13 ngày 11/3/2015
Cao Bằng	Phục Hoà	Triệu Ẩu	Xã	Cao Bằng	Phục Hoà	Triệu ẩu	Xã	3	
Cà Mau	Cà Mau	Tân Thành ()	Phường	Cà Mau	Cà Mau	Tân Thành	Phường	7	
Cà Mau	Đầm Dơi	Tạ An Khương Nam	Xã	Cà Mau	Đầm Dơi	Tạ An Khương Nam	Xã	7	
Cà Mau	Đầm Dơi	Tạ An Khương Đông	Xã	Cà Mau	Đầm Dơi	Tạ An Khương Đông	Xã	7	
Gia Lai	Mang Yang	Hà Ra	Xã	Gia Lai	Mang Yang	Hra	Xã	7	
Gia Lai	Đăk Đoa	H'Neng	Xã	Gia Lai	Đăk Đoa	H' Neng	Xã	7	
Hà Nội	Hoàn Kiếm	Chương Dương Độ	Phường	Hà Nội	Hoàn Kiếm	Chương Dương	Phường	7	
Hà Nội	Thanh Trì	Đại Áng	Xã	Hà Nội	Thanh Trì	Đại áng	Xã	3	
Hà Tĩnh	Kỳ Anh	Kỳ Liên	Phường	Hà Tĩnh	Kỳ Anh	Kỳ Liên	Xã	5	Nghị quyết 903/NQ-UBTVQH13 ngày 10/4/2015

Hà Tĩnh	Kỳ Anh	Kỳ Long	Phường	Hà Tĩnh	Kỳ Anh	Kỳ Long	Xã	5	Nghị quyết 903/NQ-UBTVQH13 ngày 10/4/2015
Hà Tĩnh	Kỳ Anh	Kỳ Phương	Phường	Hà Tĩnh	Kỳ Anh	Kỳ Phương	Xã	5	Nghị quyết 903/NQ-UBTVQH13 ngày 10/4/2015
Hà Tĩnh	Kỳ Anh	Kỳ Thịnh	Phường	Hà Tĩnh	Kỳ Anh	Kỳ Thịnh	Xã	5	Nghị quyết 903/NQ-UBTVQH13 ngày 10/4/2015
Hà Tĩnh	Kỳ Anh	Kỳ Trinh	Phường	Hà Tĩnh	Kỳ Anh	Kỳ Trinh	Xã	5	Nghị quyết 903/NQ-UBTVQH13 ngày 10/4/2015
Hà Tĩnh	Kỳ Anh	Sông Trí	Phường	Hà Tĩnh	Kỳ Anh	Kỳ Anh	Thị trấn	5	Nghị quyết 903/NQ-UBTVQH13 ngày 10/4/2015
Hải Phòng	Bạch Long Vĩ	Bạch Long Vĩ	Đảo					8	
Hậu Giang	Long Mỹ	Bình Thạnh	Phường					8	
				Hậu Giang	Long Mỹ	Long Mỹ	Thị trấn	8	
Hậu Giang	Long Mỹ	Thuận An	Phường					8	
Hậu Giang	Long Mỹ	Trà Lồng	Phường	Hậu Giang	Long Mỹ	Trà Lồng	Thị trấn	5	http://baochinhphu.vn/Hoat-dong-dia-phuong/Thanh-lap-thi-xa-Long-My-tinh-Hau-Giang/234611.vgp
Hậu Giang	Long Mỹ	Vĩnh Tường	Phường					8	
Hồ Chí Minh	1	Cầu kho	Phường	Hồ Chí Minh	1	Cầu Kho	Phường	3	
Hồ Chí Minh	12	Tân Chánh Hiệp	Xã	Hồ Chí Minh	12	Tân Chánh Hiệp	Phường	5	Quyết định số 1195/QĐ-UB ngày 18/3/1997
Hồ Chí Minh	Cần Giờ	Long Hoà	Xã	Hồ Chí Minh	Cần Giờ	Long Hòa	Xã	4	
Hồ Chí Minh	Củ Chi	Phú Hoà Đông	Xã	Hồ Chí Minh	Củ Chi	Phú Hòa Đông	Xã	4	
Hồ Chí Minh	Tân Phú	Hoà Thạnh	Phường	Hồ Chí Minh	Tân Phú	Hòa Thạnh	Phường	4	
Hồ Chí Minh	Tân Phú	Tân Thới Hoà	Phường	Hồ Chí Minh	Tân Phú	Tân Thới Hòa	Phường	4	
				Khánh Hòa	Trường Sa	Sinh Tồn	Xã	8	

				Khánh Hòa	Trường Sa	Song Tử Tây	Xã	8	
				Khánh Hòa	Trường Sa	Trường Sa	Thị trấn	8	
Kon Tum	Ia H' Drai	Ia Dal	Xã	Kon Tum	Sa Thầy	Ia Dal	Xã	6	Nghị quyết 890/NQ-UBTVQH13 ngày 11/3/2015
Kon Tum	Ia H' Drai	Ia Dom	Xã	Kon Tum	Sa Thầy	Ia Dom	Xã	6	Nghị quyết 890/NQ-UBTVQH13 ngày 11/3/2015
Kon Tum	Ia H' Drai	Ia Tơi	Xã	Kon Tum	Sa Thầy	Ia Tơi	Xã	6	Nghị quyết 890/NQ-UBTVQH13 ngày 11/3/2015
Kon Tum	Ngọc Hồi	Plei Cần	Thị trấn	Kon Tum	Ngọc Hồi	Plei Kần	Thị trấn	7	
Kon Tum	Ngọc Hồi	Pờ Y	Xã	Kon Tum	Ngọc Hồi	Bờ Y	Xã	7	
Kon Tum	Tu Mơ Rông	Ngok Yêu	Xã	Kon Tum	Tu Mơ Rông	Ngọc Yêu	Xã	7	
Kon Tum	Tu Mơ Rông	Ngọk Lây	Xã	Kon Tum	Tu Mơ Rông	Ngọc Lây	Xã	7	
Kon Tum	Tu Mơ Rông	Đắk Tơ Kan	Xã	Kon Tum	Tu Mơ Rông	Đắk Tờ Kan	Xã	7	
Kon Tum	Đắk Glei	Đắk Plô	Xã	Kon Tum	Đắk Glei	Đắk Blô	Xã	7	
Lai Châu	Mường Tè	Pa ủ	Xã	Lai Châu	Mường Tè	Pa ủ	Xã	3	
Long An	Bến Lức	Thạnh Phú	Xã	Long An	Bến Lức	Thanh Phú	Xã	7	
Long An	Tân Thạnh	Nhơn Hòa	Xã	Long An	Tân Thạnh	Nhơn Hoà	Xã	4	
Lạng Sơn	Bắc Sơn	Đồng Ý	Xã	Lạng Sơn	Bắc Sơn	Đồng ý	Xã	3	
Ninh Bình	Tam Điệp	Yên Bình	Phường	Ninh Bình	Tam Điệp	Yên Bình	Xã	5	Nghị Quyết số 904/NQ-UBNTQH13 ngày 10/4/2015
Quảng Nam	Điện Bàn	Vĩnh Điện	Phường	Quảng Nam	Điện Bàn	Vĩnh Điện	Thị trấn	5	Quyết định số 889/NQ-UBTVQH13 ngày 11/3/2015
Quảng Nam	Điện Bàn	Điện An	Phường	Quảng Nam	Điện Bàn	Điện An	Xã	5	Quyết định số 889/NQ-UBTVQH13 ngày 11/3/2015
Quảng Nam	Điện Bàn	Điện Dương	Phường	Quảng Nam	Điện Bàn	Điện Dương	Xã	5	Quyết định số 889/NQ-UBTVQH13 ngày 11/3/2015
Quảng Nam	Điện Bàn	Điện Nam Bắc	Phường	Quảng Nam	Điện Bàn	Điện Nam Bắc	Xã	5	Quyết định số 889/NQ-UBTVQH13 ngày 11/3/2015

Quảng Nam	Điện Bàn	Điện Nam Trung	Phường	Quảng Nam	Điện Bàn	Điện Nam Trung	Xã	5	Quyết định số 889/NQ-UBTVQH13 ngày 11/3/2015
Quảng Nam	Điện Bàn	Điện Nam Đông	Phường	Quảng Nam	Điện Bàn	Điện Nam Đông	Xã	5	Quyết định số 889/NQ-UBTVQH13 ngày 11/3/2015
Quảng Nam	Điện Bàn	Điện Ngọc	Phường	Quảng Nam	Điện Bàn	Điện Ngọc	Xã	5	Quyết định số 889/NQ-UBTVQH13 ngày 11/3/2015
Quảng Ngãi	Nghĩa Hành	Hành Tín Đông	Xã	Quảng Ngãi	Nghĩa Hành	Hành Tín Đông	Xã	7	
Quảng Ninh	Đông Triều	Hưng Đạo	Phường	Quảng Ninh	Đông Triều	Hưng Đạo	Xã	5	Nghị quyết 891/NQ-UBTVQH13 ngày 11/3/2015
Quảng Ninh	Đông Triều	Kim Sơn	Phường	Quảng Ninh	Đông Triều	Kim Sơn	Xã	5	Nghị quyết 891/NQ-UBTVQH13 ngày 11/3/2015
Quảng Ninh	Đông Triều	Mạo Khê	Phường	Quảng Ninh	Đông Triều	Mạo Khê	Thị trấn	5	Nghị quyết 891/NQ-UBTVQH13 ngày 11/3/2015
Quảng Ninh	Đông Triều	Xuân Sơn	Phường	Quảng Ninh	Đông Triều	Xuân Sơn	Xã	5	Nghị quyết 891/NQ-UBTVQH13 ngày 11/3/2015
Quảng Ninh	Đông Triều	Đông Triều	Phường	Quảng Ninh	Đông Triều	Đông Triều	Thị trấn	5	Nghị quyết 891/NQ-UBTVQH13 ngày 11/3/2015
Quảng Ninh	Đông Triều	Đức Chính	Phường	Quảng Ninh	Đông Triều	Đức Chính	Xã	5	Nghị quyết 891/NQ-UBTVQH13 ngày 11/3/2015
Quảng Trị	Cồn Cỏ	Cồn Cỏ	Đảo					8	
Sóc Trăng	Mỹ Xuyên	Hòa Tú 2	Xã	Sóc Trăng	Mỹ Xuyên	Hòa Tú II	Xã	7	
Sóc Trăng	Trần Đề	Đại Ân 2	Xã	Sóc Trăng	Trần Đề	Đại Ân 2	Xã	7	
Sơn La	Bắc Yên	Bắc Ngà	Xã	Sơn La	Bắc Yên	Pắc Ngà	Xã	7	
Sơn La	Bắc Yên	Xín Vàng	Xã	Sơn La	Bắc Yên	Xím Vàng	Xã	7	
Sơn La	Mai Sơn	Cò Nòi	Xã	Sơn La	Mai Sơn	Cò Nòi	Xã	7	
Sơn La	Mai Sơn	Mường Chanh	Xã	Sơn La	Mai Sơn	Mương Chanh	Xã	7	
Sơn La	Mai Sơn	Nà Ớt	Xã	Sơn La	Mai Sơn	Nà ơt	Xã	7	
Sơn La	Mộc Châu	Quy Hướng	Xã	Sơn La	Mộc Châu	Qui Hướng	Xã	7	
Sơn La	Quỳnh Nhai	Nậm Ét	Xã	Sơn La	Quỳnh Nhai	Nậm ét	Xã	3	

Sơn La	Thuận Châu	Muội Nọi	Xã	Sơn La	Thuận Châu	Muổi Nọi	Xã	7	
Sơn La	Thuận Châu	Mường É	Xã	Sơn La	Thuận Châu	Mường é	Xã	3	
Sơn La	Thuận Châu	Nong Lay	Xã	Sơn La	Thuận Châu	Noong Lay	Xã	7	
Sơn La	Thuận Châu	Phỏng Lái	Xã	Sơn La	Thuận Châu	Phổng Lái	Xã	7	
Sơn La	Thuận Châu	Phỏng Lập	Xã	Sơn La	Thuận Châu	Phổng Lập	Xã	7	
Sơn La	Thuận Châu	Thôn Mòn	Xã	Sơn La	Thuận Châu	Thôm Mòn	Xã	7	
Sơn La	Thuận Châu	Tòng Cọ	Xã	Sơn La	Thuận Châu	Tông Cọ	Xã	7	
Sơn La	Thuận Châu	Tòng Lệnh	Xã	Sơn La	Thuận Châu	Tông Lạnh	Xã	7	
Sơn La	Thuận Châu	É Tòng	Xã	Sơn La	Thuận Châu	é Tòng	Xã	3	
				Thanh Hóa	Nông Cống	Minh Thọ	Xã	8	
Thanh Hóa	Sầm Sơn	Quảng Châu	Phường	Thanh Hóa	Quảng Xương	Quảng Châu	Xã	6	Nghị quyết 39/2016/NQ-HĐND ngày 8/12/2016
Thanh Hóa	Sầm Sơn	Quảng Cư	Phường	Thanh Hóa	Sầm Sơn	Quảng Cư	Xã	5	Nghị quyết 39/2016/NQ-HĐND ngày 8/12/2016
Thanh Hóa	Sầm Sơn	Quảng Hùng	Xã	Thanh Hóa	Quảng Xương	Quảng Hùng	Xã	6	Nghị quyết 91/2014/NQ-HĐND ngày 4/7/2014
Thanh Hóa	Sầm Sơn	Quảng Minh	Xã	Thanh Hóa	Quảng Xương	Quảng Minh	Xã	6	Nghị quyết 91/2014/NQ-HĐND ngày 4/7/2014
Thanh Hóa	Sầm Sơn	Quảng Thọ	Phường	Thanh Hóa	Quảng Xương	Quảng Thọ	Xã	6	Nghị quyết 39/2016/NQ-HĐND ngày 8/12/2016
Thanh Hóa	Sầm Sơn	Quảng Vinh	Phường	Thanh Hóa	Quảng Xương	Quảng Vinh	Xã	6	Nghị quyết 39/2016/NQ-HĐND ngày 8/12/2016
Thanh Hóa	Sầm Sơn	Quảng Đại	Xã	Thanh Hóa	Quảng Xương	Quảng Đại	Xã	6	Nghị quyết 91/2014/NQ-HĐND ngày 4/7/2014

				Thanh Hóa	Đông Sơn	Đông Xuân	Xã	8	
Thái Nguyên	Phổ Yên	Ba Hàng	Phường	Thái Nguyên	Phổ Yên	Ba Hàng	Thị trấn	5	Nghị quyết sô 932/NQ-UBTVQH13 ngày 15/5/2015
Thái Nguyên	Phổ Yên	Bãi Bông	Phường	Thái Nguyên	Phổ Yên	Bãi Bông	Thị trấn	5	Nghị quyết sô 932/NQ-UBTVQH13 ngày 15/5/2015
Thái Nguyên	Phổ Yên	Bắc Sơn	Phường	Thái Nguyên	Phổ Yên	Bắc Sơn	Thị trấn	5	Nghị quyết sô 932/NQ-UBTVQH13 ngày 15/5/2015
Thái Nguyên	Phổ Yên	Đồng Tiến	Phường	Thái Nguyên	Phổ Yên	Đồng Tiến	Xã	5	Nghị quyết sô 932/NQ-UBTVQH13 ngày 15/5/2015
Thái Nguyên	Sông Công	Lương Sơn	Phường	Thái Nguyên	Thái Nguyên	Lương Sơn	Xã	5	Nghị quyết sô 932/NQ-UBTVQH13 ngày 15/5/2015
Thái Nguyên	Thái Nguyên	Chùa Hang	Phường	Thái Nguyên	Đồng Hỷ	Chùa Hang	Thị trấn	5	Nghị quyết số 422/NQ-UBTVQH14 ngày 18/8/2017
Thái Nguyên	Thái Nguyên	Huống Thượng	Xã	Thái Nguyên	Đồng Hỷ	Huống Thượng	Xã	6	Nghị quyết số 422/NQ-UBTVQH14 ngày 18/8/2017
Thái Nguyên	Thái Nguyên	Linh Sơn	Xã	Thái Nguyên	Đồng Hỷ	Linh Sơn	Xã	6	Nghị quyết số 422/NQ-UBTVQH14 ngày 18/8/2017
Thái Nguyên	Thái Nguyên	Sơn Cẩm	Xã	Thái Nguyên	Phú Lương	Sơn Cẩm	Xã	6	Nghị quyết số 422/NQ-UBTVQH14 ngày 18/8/2017
Thái Nguyên	Thái Nguyên	Đồng Bẩm	Phường	Thái Nguyên	Thái Nguyên	Đồng Bẩm	Xã	5	Nghị quyết số 422/NQ-UBTVQH14 ngày 18/8/2017
Thái Nguyên	Thái Nguyên	Đồng Liên	Xã	Thái Nguyên	Phú Bình	Đồng Liên	Xã	6	Nghị quyết số 422/NQ-UBTVQH14 ngày 18/8/2017
Thừa Thiên Huế	Huế	Đúc	Phường	Thừa Thiên Huế	Huế	Phường Đúc	Phường	7	
Tiền Giang	Gò Công Đông	Tăng Hòa	Xã	Tiền Giang	Gò Công Đông	Tăng Hoà	Xã	4	
Tiền Giang	Tân Phước	Thạnh Hòa	Xã	Tiền Giang	Tân Phước	Thạnh Hoà	Xã	4	
Trà Vinh	Duyên Hải	1	Phường					8	
Trà Vinh	Duyên Hải	2	Phường					8	
				Trà Vinh	Duyên Hải	Duyên Hải	Thị trấn	8	
Trà Vinh	Duyên Hải	Đôn Châu	Xã	Trà Vinh	Trà Cú	Đôn Châu	Xã	6	Nghị quyết sô 934/NQ-UBTVQH13 ngày 15/5/2015

Trà Vinh	Duyên Hải	Đôn Xuân	Xã	Trà Vinh	Trà Cú	Đôn Xuân	Xã	6	Nghị quyết sô 934/NQ-UBTVQH13 ngày 15/5/2015
Đà Nẵng	Hải Châu	Hải Châu I	Phường	Đà Nẵng	Hải Châu	Hải Châu I	Phường	7	
Đắk Lắk	Ea Kar	Cư Yang	Xã	Đắk Lắk	Ea Kar	Cư Jang	Xã	7	
Đồng Tháp	Lấp Vò	Tân Khánh Trung	Xã	Đồng Tháp	Lấp Vò	Tân Khánh Trung	Xã	7	