HAL
open science

Design of a water allocation and energy network for multi-contaminant problems using multi-objective optimization

Sofía de León Almaraz, Marianne Boix, Ludovic Montastruc, Catherine Azzaro-Pantel, Zuwei Liao, Serge Domenech

To cite this version:

Sofía de León Almaraz, Marianne Boix, Ludovic Montastruc, Catherine Azzaro-Pantel, Zuwei Liao, et al.. Design of a water allocation and energy network for multi-contaminant problems using multi-objective optimization. Process Safety and Environmental Protection, 2016, 103, pp.348-364. 10.1016/j.psep.2016.03.015 . hal-01907327

HAL Id: hal-01907327

https://hal.science/hal-01907327v1

Submitted on 29 Oct 2018

HAL is a multi-disciplinary open access archive for the deposit and dissemination of scientific research documents, whether they are published or not. The documents may come from teaching and research institutions in France or abroad, or from public or private research centers.

L'archive ouverte pluridisciplinaire **HAL**, est destinée au dépôt et à la diffusion de documents scientifiques de niveau recherche, publiés ou non, émanant des établissements d'enseignement et de recherche français ou étrangers, des laboratoires publics ou privés.

Open Archive Toulouse Archive Ouverte (OATAO)

OATAO is an open access repository that collects the work of some Toulouse researchers and makes it freely available over the web where possible.

This is an author's version published in: http://oatao.univ-toulouse.fr/20516

Official URL: https://doi.org/10.1016/j.psep.2016.03.015

To cite this version:

De León Almaraz, Sofía and Boix, Marianne and Montastruc, Ludovic and Azzaro-Pantel, Catherine and Liao, Zuwei and Domenech, Serge Design of a water allocation and energy network for multi-contaminant problems using multi-objective optimization. (2016) Process Safety and Environmental Protection, 103. 348-364. ISSN 0957-5820

Any correspondance concerning this service should be sent to the repository administrator: tech-oatao@listes-diff.inp-toulouse.fr

Design of a water allocation and energy network for multi-contaminant problems using multi-objective optimization

S. De-León Almaraz[a], *M. Boix*[a,*], *L. Montastruc*[a], *C. Azzaro-Pantel*[a], *Z. Liao*[b], *S. Domenech*[a]

[a] *Université de Toulouse, Laboratoire de Génie Chimique U.M.R. 5503 CNRS/INP/UPS. 4 allée Emile Monso, 31432 Toulouse Cedex 4, France*

[b] *State Key Laboratory of Industrial Control Technology, Zhejiang University, Hangzhou 310027, Zhejiang, China*

Keywords:
WAN
HEN
WAHEN
Pinch
Mathematical programming
Change of phase

A B S T R A C T

In this paper, a solution strategy based on an optimization formulation is proposed for the design of Water Allocation and Heat Exchange Networks (WAHEN) in the process industries. Such typical large problems involve many processes, regeneration units and multi-contaminants. For this purpose, a two-stage methodology is proposed. The first step is the Water Allocation Network (WAN) design by multi-objective optimization, based on the minimization of the number of network connections and of the global equivalent cost (which includes three criteria, i.e., freshwater, regenerated water and wastewater). The ε-constraint method is used to deal with the multi-criteria problem. In a second step, the Heat Exchange Network (HEN) is solved by two approaches, Pinch analysis and mathematical programming (MP). In both cases the HEN structure is found when the minimal energy requirement and the total annual cost are minimized for Pinch and MP, respectively. These results are compared and the best HEN network is then coupled to the WAN to verify the feasibility of the network. A case study including a change of phase among the streams is solved. The results show that this two-step methodology can be useful for the treatment of large problems.

1. Introduction

Water risks are often considered purely in terms of water quantity or quality. However, other components such as geographical location, availability over time, reliability and price (SBC Energy Institute, 2014) exist and have to be considered to tackle this multidimensional issue. On the one hand, the demand reduction by water substitution, the use of recycled water, the improvement of water processing, the decrease in water pollution relying on regulations and the water price increase constitute the most important water challenges. On the other hand, the improvement of water supply that involves infrastructure alternative networks or alternative supply (e.g., wastewater treatment), transportation and storage is also a challenging issue.

In the specific case of process industries, water can be used for extraction and production of sources, processing and transformation. A huge amount of water is also used for cleaning, transporting substances or pollutants, heating and cooling, etc., the last two uses that correspond to temperature adjustments need energy to get temperature targets from the water streams. Water and energy are highly interconnected (the so-called water-energy "nexus") and their relationship will remain under stress (SBC Energy Institute, 2014).

* *Corresponding author*. Tel.: +33 5 34 32 36 66; fax: +33 5 34 32 37 00.
E-mail address: Marianne.Boix@ensiacet.fr (M. Boix).

Depending on the source, water can be classified as freshwater, regenerated (recycled) water and wastewater. Freshwater (e.g., tap water) can be entered into the system from surface, urban or underground sources. This kind of water is assumed to be zero contaminant (but for specific processes additional purification processes are required). Once the water is used in a process it can be discharged as wastewater or sent to treatment units to remove the contaminant load for reuse purpose. In this case, two types of treatment exist, first treatment for process reuse (respecting the contaminant bounds defined for each process) and second treatment of wastewater before its discharge out of the plant respecting the regulations. The reuse of water is possible in plants equipped with treatment units and water exchange among plants can be offered by industrial eco-parks. Industrial eco-parks, also commonly known as eco-hubs or eco-parks, manage to reconcile business and the environment, by exchanging materials, energy and information, so as to achieve a triple environmental, social, and financial goal, known as industrial symbiosis. One problem related to the reduction of water consumption in industries is the lack or scarcity of regeneration units. Another problem to reuse water is linked to the multiple contaminants that must be treated by the processes. As reported in the dedicated literature, the study of a multi-contaminant water network can be simplified by using the commonly called "key parameter" approach. The study of only one "key" contaminant has been presented in (Wang and Smith, 1994; Bagajewicz et al., 2000), however, sometimes it is difficult or impossible to target the key contaminant. Moreover, for multi-objective WAN design, a study based on the key contaminant is valid for the reach of the minimum freshwater target but cannot be implemented for designing an optimal water network regarding several objectives (Boix et al., 2011).

Instead of using empirical methods, systemic methodologies based on modeling and optimization can be used to improve the use of water and to design their networks. Several options exist in designing Water Allocation Networks (WAN), Heat Exchange Networks (HEN) or both of them in either sequential or simultaneous approaches referring to Water Allocation and Heat Exchange Network (WAHEN).

The design of optimal WAN minimizing both economic and environmental objectives has been extensively reported in the literature. The general model can be solved by conceptual tools (Alva-Argáez et al., 1999; Foo, 2009; Alva-Argáez et al., 2007; Hou et al., 2014). The water pinch method was first applied to WAN in (Wang and Smith, 1994). In this work, the multi-contaminant problems are analyzed by the identification of the key contaminant considering reused and recycled water. The use of mathematical programming is very common to design the WAN and the type of the involved formulation depends on the nature of the constraints and of the objective function. The model can be formulated either with Non Linear Programming (NLP) or Mixed Integer Non Linear Programming (MINLP). The WAN superstructure was first defined by Takama et al. (1980) where the problem is transformed into a series of sub-problems without inequality constraints by employing a penalty function. Savelski and Bagajewicz (2000) considered wastewater reuse on the basis of a single contaminant by MINLP by the minimization of the total amount of water. Bagajewicz et al. (2000) treated the WAN problem as two interacting subsystems, that are the freshwater and wastewater reuse allocation and the wastewater treatment problem. Karuppiah and Grossmann (2006) proposed a model that globally minimizes freshwater and regenerated wastewater by the use of a deterministic spatial branch and contract algorithm. Some stochastic tools such as genetic algorithms have also been used (Tsai and Chang, 2001). Poplewski et al. (2011) applied the adaptive random search as a stochastic technique to find the optimal network. A detailed literature review of WANs with mathematical models can be found in (Bagajewicz, 2000; Grossmann et al., 2014; Bagajewicz and Faria, 2009).

The most optimized criterion in the WAN design is the freshwater flow rate; other criteria such as regenerated water, mass load, total cost and interconnections are also mentioned. Multi-objective optimization has been addressed in (Feng et al., 2008; Tudor and Lavric, 2011; Boix et al., 2011; Deng et al., 2013; De-León Almaraz et al., 2015).

The WAN optimization is a complex task, especially when multiple contaminants are treated in the same plant with particular emphasis on selecting the use of many regeneration units. The existence of several contaminants has been identified in many works (Takama et al., 1980; Wang and Smith, 1994; Bagajewicz et al., 2000; Gunaratnam et al., 2005; Karuppiah and Grossmann, 2006; Alva-Argáez et al., 2007; Feng et al., 2008; Dong et al., 2008; Leewongtanawit and Kim, 2008; Kim et al., 2009; Tudor and Lavric, 2011; Poplewski et al., 2011; Hu et al., 2011; Boix et al., 2011; Ahmetović and Kravanja, 2013; Deng et al., 2013; Hou et al., 2014; Ibrić et al., 2014; De-León Almaraz et al., 2015; Yan et al., 2016a), some of these works involve not only WAN but also HEN optimization. However, the water treatment or recycling in the network has been considered in fewer works (Takama et al., 1980; Gunaratnam et al., 2005; Karuppiah and Grossmann, 2006; Feng et al., 2008; Dong et al., 2008; Poplewski et al., 2011; Boix et al., 2011; Tudor and Lavric, 2011; Ibrić et al., 2014; Yang et al., 2014). This is an important issue because one of the problems in reducing the water consumption in industries is the lack of regeneration units or the bad use of them. In the mathematical model, the addition of constraints related to the regeneration units gives more complexity to the WAN design especially when several processes and contaminants are also involved resulting in a large-size problem.

The problem size definition could vary but in the literature, a "large-size" or "complex" network has been labeled in (Takama et al., 1980; Karuppiah and Grossmann, 2006; Ibrić et al., 2014; Leewongtanawit and Kim, 2008; Liu et al., 2015) for problems that represent an industrial network with more than 3 processes, 3 regeneration units and 3 contaminants. This type of configuration increases the combinatorial nature of the problem especially when the HEN is also solved because many hot and cold streams are also integrated.

With respect to heat exchange network synthesis, some methodologies have been developed using conceptual design approaches (such as Pinch analysis, source-demand energy composite curves, graphical thermodynamic rule, heat surplus diagrams, and water energy balance diagrams), mathematical programming (MP) and hybrid models. Nowadays, the most used process integration technique is the Pinch analysis first presented in (Linnhoff and Hindmarsh, 1983) and published in several works (e.g., Savulescu et al., 2005; Allen et al., 2009). This technique is the simplest one but relies on heuristic rules and proposes a good HEN configuration by the maximization of heat recovery optimization. The steps that need to be followed in the Pinch analysis are: (a) identification of the energy targets through composite curves and grand composite curve, (b) establishing the optimum ΔT_{min}, for the process, (c) obtaining the new composite curve and grand composite curve with the optimum ΔT_{min},

(d) obtaining the pinch point and the minimum energy requirement (MER) for hot and cold utilities, (e) the problem is then partitioned into sub-networks disallowing exchangers to be placed across the pinch point establishing the proper HEN based on this results (Morar and Agachi, 2010). Pinch has evolved over time to analyze detailed streams analysis per process to identify the cheapest ways when heat recovery is maximized to reduce the utilities use, etc.

Besides, mathematical modeling to design the HEN has also been largely explored by the scientific community. The main advantage of this approach is that it can be coupled in some cases with the WAN formulation to have a one-step optimization. In mathematical modeling there are five main types of heat integration problems: area targeting, simultaneous area and energy targeting (Yee et al., 1990a), modeling of multi-streams exchangers, synthesis (Yee and Grossmann, 1990), simultaneous process and HEN synthesis (Yee et al., 1990b). Similarly to the WAN problem, the HEN model can be NLP or MINLP. In the general formulation, the total annual cost (utility cost, area cost and fixed charges for exchanger units) are optimized.

Different strategies have been developed to design the WAHEN which can be optimized sequentially from the WAN flow sheet or simultaneously. Although the sequential method could be considered as an old method, some recent works have used the two-step optimization. Jeżowski et al. (2007) used adaptive random search for WAN design and genetic algorithms (GA) for the HEN design. Boix et al. (2012) proposed a multi-objective optimization based on a two-stage approach for WAN and subsequently HEN optimization to solve water and energy allocation problem with four criteria, i.e., freshwater consumption, energy consumption, number of interconnections and number of heat exchangers. Ibrić et al. (2014) proposed an efficient two-step solution strategy for obtaining a set of multiple locally optimal solutions. Firstly, the NLP/MINLP targeting model was solved in order to provide an initialization point and constraints for solving the second MINLP model minimizing the total annual cost (TAC) of the network. Short et al. (2016) used the model of Yee and Grossmann (1990) to initialize solutions and improve it to converge on a real design.

Recently, simultaneous approaches have been widely used for non-isothermal streams mixing (Bogataj and Bagajewicz, 2008), in the case of mono-contaminant or multi-contaminant networks (Liao et al., 2011; Leewongtanawit and Kim, 2008; Dong et al., 2008; Bogataj and Bagajewicz, 2008; Ahmetović and Kravanja, 2014; Chen et al., 2014; Hou et al., 2014; Zhou et al., 2015; Yan et al., 2016b). A thorough review of the related works can be found in (Morar and Agachi, 2010; Ahmetović et al., 2015). Another approach is based on the use of artificial intelligence tools such as multi-objective GA (Agarwal and Gupta, 2008) and simulated annealing (Dolan et al., 1990). Finally, there are also some hybrid models, for example, the study of Manan et al. (2009) that presents a new technique for simultaneous minimization of water and energy in process plants through a combination of numerical and graphical tools.

Comparing both sequential and simultaneous approaches, both of them have advantages and drawbacks. The main limitation of sequential methods is that on the one hand the WAN configuration is imposed with a given cost and thus leading to a suboptimal network solution when tackling HEN optimization in a second phase. A different network design could be obtained with simultaneous optimization and the HEN designed for an allocated water network may not correspond to a minimum operation cost. On the other hand, this methodology has also specific advantages. First of all, it can capture a tradeoff among several criteria and not only the TAC. Second, it can be applied to larger problems and the possibility to study the water regeneration in the first step exists. A water-energy allocation network can be designed more easily by solving the sequential mathematical model than the simultaneous mathematical model, thus leading to an efficient although suboptimal solution. Finally, it can greatly reduce the complexity of subsequent HEN design and at the same time to make possible to solve larger and more complex HEN networks.

Meanwhile simultaneous optimization is difficult to be implemented for large problems because of the combinatorial aspect. In most works, the regeneration of water cannot be considered with this approach except in the study of (Dong et al., 2008) where a problem with 3 processes, 1 contaminant 2 treatment units is solved, thus highlighting the difficulty to deal with larger problems and the integration of regeneration units. The improvement of simultaneous WAHEN networks with several treatment units remains a challenge. As presented in (Ahmetović et al., 2015), several papers published in the literature have addressed these issues but only small and medium size problems were solved due to the abovementioned complexities of the overall synthesis problem. New solution strategies and tools are thus required for solving large-scale water, wastewater, and heat exchanger networks simultaneously due to high computational costs. Anyway, the efforts to simultaneously WAHEN optimization are extremely important especially for solving the overall synthesis problems including large-scale and industrial examples.

In that context, the objective of this work is to propose and validate a robust methodology for designing Water Allocation and Heat Exchange Networks (WAHEN) for large problems with several processes, regeneration units and contaminants. The methodology proposed in this work will be supported by the case study of a simplified petroleum refinery (Gunaratnam et al., 2005) with five processes, three contaminants and three regeneration units. To our knowledge, the HEN has not been yet carried out for the abovementioned case study. It must be highlighted that the temperature targets were lacking in the original case study, this explains why a data analysis was carried out in this work to fill this lack. The originality of this work is that different input and output temperatures are integrated in each process and each regeneration unit and that the change of phase of some streams in the HEN can occur, which has not been reported in the WAHEN literature to our knowledge. A two-step sequential procedure is proposed for the combined design of WAN and HEN. In the WAN step, the multi-objective optimization methodology previously presented in (De-León Almaraz et al., 2015) is tackled. The optimization criteria for the WAN involves the minimization of freshwater flow rate, interconnections, regenerated water and wastewater by the application of the ε-constraint method. In the HEN design step, two different methodologies will be applied, i.e., Pinch analysis and mathematical programming in order to compare and validate the obtained results by the minimization of utilities requirement and TAC. The use of conceptual tools and mathematical modeling in the second step is particularly appropriate to generate comparative scenarios. These results will serve as a reference to move forward the simultaneous WAHEN design.

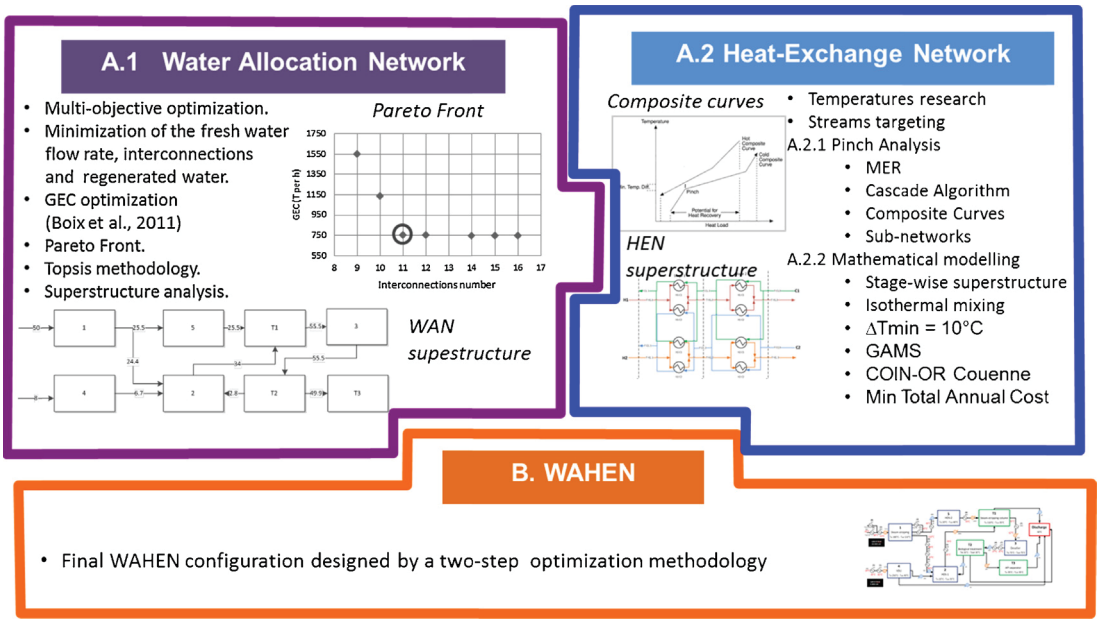

Fig. 1 – Framework for the WAHEN optimization.

The remainder of this paper is organized as follows: Section 2 is dedicated to the methodology presentation including the WAN and HEN general formulations and the solution strategy. The case study is presented in Section 3. Section 4 is dedicated to the result analysis. Finally, conclusions and perspectives are given.

2. Methodology

2.1. *Problem statement*

Both for simultaneous and sequential approaches (in mathematical programming), the use of several sets related to multiple options for processes, regeneration units and contaminants, increases the number of variables leading to a combinatorial problem in which large problems are difficult to solve. Moreover, for either WAN or HEN formulations, the use of binary variables (if necessary) and the non-linearity of the problem increase the computational complexity. For HEN optimization, both conceptual tools and mathematical modeling offer good trade-offs. In the case of simultaneous optimization, the initialization step is very important to reach feasible solutions. In our study, the exploration and validation of methodologies to solve large multi-contaminant problems are mandatory in order to identify potential barriers, propose new strategies and move forward the one-step optimization.

The general WAHEN framework presented in Fig. 1 considers two stages (A and B). In stage A, step A.1 consists in optimizing the WAN by multi-objective optimization following the methodology presented by Boix et al. (2011); the use of this procedure was previously justified in (De-León Almaraz et al., 2015) and is briefly explained in Section 2.2. Step A.2 is the HEN optimization comparing two well-known frameworks, the Pinch analysis (Linnhoff and Hindmarsh, 1983) and the mathematical model of Yee and Grossmann (1990). Stage B consists of the simultaneous representation of the WAHEN for feasibility analysis.

It must be emphasized that only few works have been reported to tackle such problems in the literature. Dong et al. (2008) presented an interesting approach to apply simultaneous optimization of the WAHEN by the minimization of the TAC. Many processes, generation units and contaminants can be treated but only medium problems were solved and the multi-contaminant case does not consider treatment units. Liu et al. (2015) solved also similar problems but, the combinatorial complexities are avoided by the application of simpler case studies (e.g., 15 process units, 1 contaminant and 1 treatment unit). Ibrić et al. (2014) solved problems closer to those presented in the proposed work (e.g., 4 processes, 2 contaminants and 2 treatment units/3 processes, 3 contaminants and 3 treatment units) by the use of a two-step solution strategy including targeting and design steps. The main difference with the methodology presented in this work is the possibility to apply multi-objective optimization, to target input and output temperatures and to analyze the change of phase.

2.2. *General superstructure of the Water Allocation Network (WAN)*

A general superstructure for WAN modelling is presented in Fig. 2. From a given number of processes (j, k) and regeneration units (l, m), all the possible connections between them may exist, except regeneration recycling to the same regeneration unit or from a process to the same one.

The input water flow rate in a process unit can be freshwater, used water coming from other processes and/or recycled water coming from a regeneration unit. Each task performed by a given process contaminates its input water up to a given mass fraction. Several contaminants (i) can exist in the system. Input or output contaminant mass fractions (ppm) which are imposed by the user, will constitute bounds for the optimization problem. The water output for such a process may be directly discharged and distributed to all other processes units then to regeneration units. Similarly, for a regeneration unit the input water may come from either processes unit or other regeneration units. The regeneration units have a given processing capacity. Regenerated water may be reused in the processes or directed to other regeneration units. The amount of pollutant i generated by a process j denoted $M_{i,j}$ is expressed in mass flow rate (g h^{-1}) in order to have consistent units with

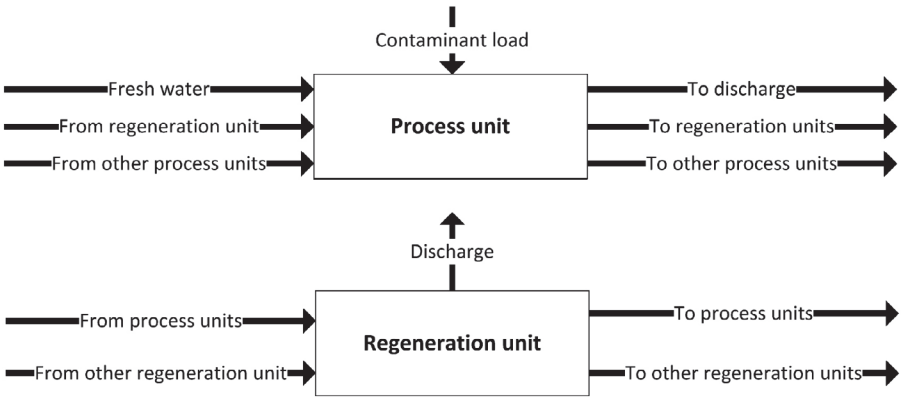

Fig. 2 – Generic elements of the superstructure (Boix et al., 2011).

the water flow rate ($t\,h^{-1}$) and the contaminant mass fraction (ppm). In this work we assume that the values of inlet and outlet concentrations of contaminant and the mass load of the water process units are constant and that freshwater is free of contaminant. Finally, for water balance in discharge, water input may come from any process unit or regeneration unit depending on maximal contaminant load limit.

For reasons of brevity, the equations are not presented here but the whole mathematical model can be found in Appendix A. The model includes water balances, mass balances of contaminant in processes and discharge, bounds on inlet and outlet concentrations of each process and regeneration unit. In general, the variables are the water flow rates in the whole system. Although the approach is a "black box", some parameters must be clearly defined, i.e., the number of units (process and regeneration), the concentration bounds for each process (ppm), the contaminant load in each process ($g\,h^{-1}$) and the performance of the treatment units for each the contaminant (fractional yields).

Several objective functions presented in the works of (Boix et al., 2011; Feng et al., 2008) can be used to solve a multi-contaminant problem with many regeneration units minimizing the total flow rate of freshwater (*FW*) in the network ($T\,h^{-1}$) and the regeneration unit flow rate ($T\,h^{-1}$). These are important criteria as they are antagonist and different solution strategies to solve the multi-objective problem can be proposed. Moreover, the interconnections among processes and treatment units could also be minimized.

In this work, the optimization of four criteria is proposed, i.e., the interconnections (*Y*), the fresh water flow rate (*FW*), the regenerated water (*RW*) and the wastewater (*WW*). Although four objectives are minimized, the number of objective functions (OF) can be reduced to two by the use of a global cost function that include *FW*, *RW* and *WW* as proposed by Boix et al. (2011). This OF is called Global Equivalent Cost (GEC) and is expressed in equivalent of water flow rate ($T\,h^{-1}$). The GEC allows expressing the overall cost of the network in amount of freshwater. In GEC calculation in Eq. (E1), the *FW*, *RW* and *WW* are weighted by their contributions relative to the freshwater (equal to 1). Consequently, three criteria are merged into only one according to the following relation:

$$\mathrm{GEC} = FW + \alpha RW + \beta WW \tag{E1}$$

In E1, α and β are cost elements respectively related to the regenerated water cost and post-treatment cost for water sent to the discharge; α depends on the type of regeneration technology (see Table 2) and β is fixed to 5.625 according to (Bagajewicz and Faria, 2009).

The second objective function to be minimized is the number of interconnections in the network (presented in E2) where the number of connections is given by the sum of the binary variables *Y* among the processes *j* where Y_j^{FW} is the input connection of freshwater to a process *j*, $Y_{j,k}$ represents a connection between processes *j* and *k*, $Y_{j,l}$ is the connection between processes *j* and regeneration unit *l* and vice versa for the case of $Y_{l,j}$ and finally $Y_{l,m}$ is the link between regeneration units.

$$\text{Interconnections} = \sum_j Y_j^{FW} + \sum_{j,k} Y_{j,k} + \sum_{j,l} Y_{j,l} + \sum_{l,j} Y_{l,j} + \sum_{l,m} Y_{l,m} \quad j \neq k, l \neq m \tag{E2}$$

The general model involving some nonlinear constraints is then defined as an NLP formulation but if the interconnections criterion is added, the model becomes of MINLP nature because of the use of binary variables *Y* related to the existence or not of an interconnection between processes and/regeneration units. The use of binary variables gives more complexity to the model and generalized disjunctive programming (GDP) is used. In the WAN problem, each disjunction is treated through a Big-*M* constraint (see also Section 2.4.1). *M* is a large number and will be related to the binary variables (see Appendix A). This formulation is easy to code and very useful in the implementation of the ε-constraint method. The MINLP model has been validated as a good trade-off in (De-León Almaraz et al., 2015).

2.3. *General superstructure of the Heat Exchange Network (HEN)*

In the design of the HEN for the sequential approach, the WAN superstructure of the abovementioned model is the base flow sheet. In addition, the HEN requires stream targeting for pairing (matching) them. As previously explained, two methodologies will be applied to the same case study in order to compare the results. In this section, the Pinch analysis and the mathematical model proposed by Yee and Grossmann (1990) are briefly presented.

2.3.1. *HEN design by Pinch analysis*

The Pinch analysis is developed to build a base solution for the case study of Gunaratnam et al. (2005) that has not been

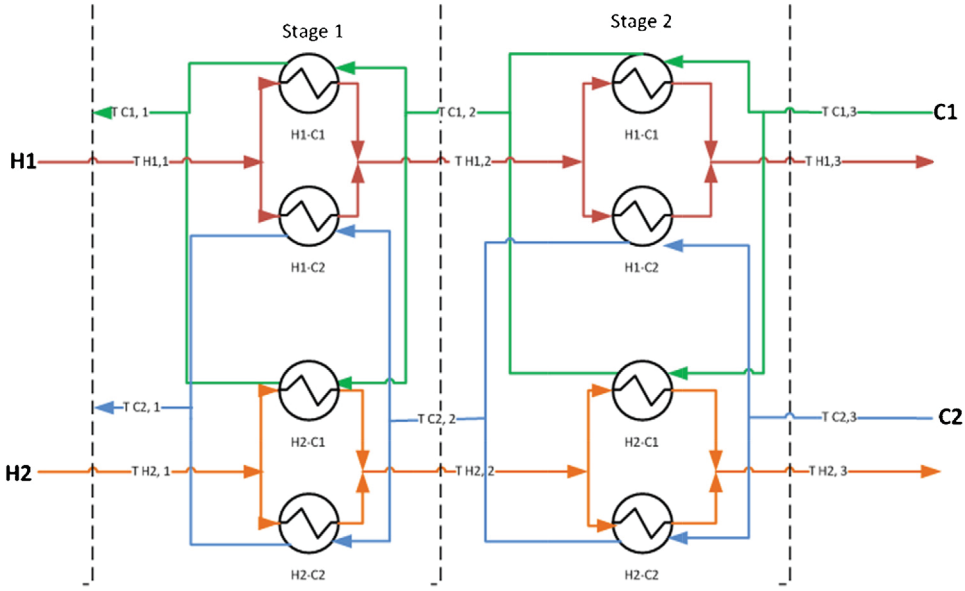

Fig. 3 – Heat exchanger network superstructure.

previously solved for the HEN design. This solution step will give us a reference about the relevance, advantages and disadvantages of Pinch vs. mathematical programming. In this approach the minimum energy requirement (MER) is found by the elaboration of composite curves. The Pinch point with ΔT_{min} equal to10 °C is identified so that the design of heat sub-networks can be carried out. The Pinch method offers several advantages because is the simplest technique, easy to use and with immediate results. Its efficiency and applicability to many industrial saving energy problems has been demonstrated, but a global WAHEN optimization with only one stage is not possible as a conceptual tool. Even if this methodology is easy to be implemented, the use many heuristic rules is required to find a good trade-off between the "calculation" time and the efficiency of the solution keeping the MER target but at the same time limiting the number of sub-streams and heat exchangers (with small areas).

2.3.2. *HEN design by mathematical programming*

In this study, the model presented by Yee and Grossmann (1990) is implemented. A general two-stage representation for heat integration is shown in the superstructure in Fig. 3.

Given are:

- the process flow sheet or the WAN superstructure;
- a set of hot process streams HP to be cooled;
- a set of cold process CP streams to be heated;
- heat capacity flow rates (FCp) and the initial target temperatures (TIN);
- a set of hot utilities (HU) and cold utilities (CU) and their corresponding temperatures; and
- economic data such as costs of utilities, exchangers, etc.

The number of stages NOK = max (N_h and N_C) in (Yee and Grossmann, 1990) where N_h and N_C are the total number of hot and cold streams respectively. In this study, some variations in the NOK value are considered: NOK ≦ max (N_h and N_C) will be used as also presented in (Yan et al., 2016b). With this modification, two advantages are found, first reducing the number of binary variables and the continuous variables related to them and second avoiding the problem to find a solution in the upper bound of the NOK or very close to the maximal number of stages. It has been found that if this is the case, a new optimization should be done to relax the problem. A post-optimal analysis with the Lagrange parameters could improve the setting of the NOK parameter.

The decision variables involve the utility energy requirement for the network (auxiliary utilities as fuel, steam, cooling water, refrigeration, etc.), matches between streams and/or stream-utility and the number of heat exchangers. Binary variables are introduced to represent the existence of each potential heat exchanger in the superstructure. Continuous variables are assigned to operating temperatures, heat loads and areas of each exchanger.

The general model involves overall heat balances for each stream, stream energy balances at each stage, assignment of known stage temperatures, calculation of hot and coal utility loads, logical constraints and calculation of approach temperatures. Only one type of hot and cold utility is considered. Isothermal mixing is assumed to use linear constraints. For simplicity, utility streams are assumed to be placed at the extreme ends of the sequence of stages.

With this model, the network configuration and flows for all branches is found. This approach does rely neither on the assumption of fixed temperature approaches such as the heat recovery approach temperature (HRAT) or the exchanger minimum approach temperature (EMAT), nor on the prediction of the pinch point for the partitioning into sub-networks, and on the number of exchangers and matches (Yee and Grossmann, 1990). With this model, the pinch point location is not predetermined but rather optimized simultaneously. In this work, we assume that the process and treatment units work isothermally and continuously and no water and heat losses or gains are considered. The liquid water streams have a constant heat capacity ($c_p = 4.18\,kJ\,kg^{-1}\,K^{-1}$).

The objective is to determine the heat exchanger network which exhibits the lowest annual cost by minimizing the utility cost, area cost and fixed charges for exchanger units simultaneously (see (E3)). The Total Annual Cost (TAC) is the addition of the investment cost of heat exchangers (i.e., exchanger cost C^{EC} multiplied by the binary variables related to the exchangers between hot-cold streams $Z_{i,j,k}$ and utilities exchangers zcu_i and zhu_i. Area cost is equal to the area cost coefficient for heat exchangers and utility units C^A

multiplied by its area A as shown in Eq. (E4)); the utility cost (by the addition of the cost of HU and CU (C_{HU} and C_{CU}) by the energy exchanged between streams and hot (qhu) or cold (qcu) utilities) and the cost of water (CW).

$$\mathrm{TAC} = \sum_{i,j,k} C_{i,j}^{EC} \times z_{i,j,k} + \sum_{i} C_{i}^{EC} \times zcu_i + \sum_{j} C_{j}^{EC} \times zhu_j + \sum_{i,j,k} C_{i,j}^{A} \times \left(A_{i,j,k}^{int}\right)^{\beta} + \sum_{i} C_{i}^{A} \times \left(A_{i}^{uhu}\right)^{\beta} + \sum_{j} C_{j}^{A} \times \left(A_{j}^{ucu}\right)^{\beta} + \sum_{i} C_{CU} qcu_i + \sum_{j} C_{HU} qhu_j + \mathrm{CW} \tag{E3}$$

The nonlinearity of the model is given by the area calculation where the logarithmic mean temperature difference (LMDT) is approximated using the (Chen, 1987) equation, see an example in Eq. (E4) where the area of inter-streams heat exchanger is calculated. In this expression, $q_{i,j,k}$ is the energy exchanged between hot stream i and cold stream j in stage k, $dt_{i,j,k}$ is the approach between i and j at location k and hh_i and hc_j are partial heat transfer coefficients for hot and cold stream-individual film.

$$A_{i,j,k}^{int} = \frac{q_{i,j,k} \times \left(\frac{1}{hh_i} + \frac{1}{hc_j}\right)}{\left(dt_{i,j,k} \times dt_{i,j,k+1} \times \frac{dt_{i,j,k}+dt_{i,j,k+1}}{2}\right)^{1/3}} \tag{E4}$$

The HEN mathematical model can also be found in the GAMS library as the SYNHEAT model (Yee and Grossmann, 1990). For comparison, the same way to calculate the TAC is applied to the HEN configuration found by Pinch analysis.

2.4. *Solution strategy*

2.4.1. *WAN design by multi-objective optimization*

The solution strategy for stage A.1 (WAN design) for multi-objective optimization uses lexicographic and ε-constraint methods. Lexicographic problems arise naturally when conflicting objectives exist in a decision problem but for reasons outside the control of the decision maker the objectives have to be considered in a hierarchical manner (Khorram et al., 2010), in the case of this methodology, it is useful to generate a pay-off table. This method can be viewed as "a priori" approach with aggregation using constraints in a decoupled method. In order solve the multi-objective problem, the following procedure known as the sequential method is adopted: first, minimize $f1(x)$, and determines an optimal solution $x^*(f1(x^*) = \beta 1)$. Next, the problem is solved minimizing $f2(x)$ subject to $f1(x^*) = \beta 1$, and so on until the last objective function fn is optimized. This procedure allows finding lower and upper bounds for each objective function to be used in the ε-constraint method. As previously presented in Section 2.2, the chosen WAN formulation involves two criteria: $f1$ = interconnections and $f2$ = GEC. In order to find the solution range, we optimized each objective function separately and followed the lexicographic method for each of them.

In the ε-constraint method, introduced by Haimes et al. (1971) all but one objective are converted into constraints by setting an upper or lower bound to each of them, and only one objective is to be optimized (Liu and Papageorgiou, 2013). By varying the numerical values of the upper bounds, a Pareto front can be obtained. The main difficulty of this method lies in determining Nadir points (where the criteria are their worst values) but the previous application of the lexicographic method reduce this difficulty as reported in (Mavrotas, 2007, 2009). In our specific case, the $f1$ (number of interconnections) is converted into a model constraint and $f2$ (GEC) is optimized each time that the ε-value of $f1$ is modified in the set of its intermediate values among the upper and lower bounds for $f1$. Following this procedure, the Pareto front (a set of trade-off solutions equivalent to WAN superstructure) can be obtained. Finally, a Multi-Criteria Aid Decision Making (MCDM) tool based on the so-called M-TOPSIS method (Ren et al., 2007) (Modified Technique for Order of Preference by Similarity to Ideal Solution) is used to choose the best trade-off solution. The MINLP problem is solved in GAMS (Brooke et al., 1988) using the Bonmin solver. This part of the methodology was applied in (De-León Almaraz et al., 2015) and results concerning the Pareto Front and the multi-objective approach can be found. In this study, the WAN configuration following this methodology is the starting point.

One particular challenge in the WAN formulation is the correct setting of some parameters used for generalized disjunctive programming (GDP). GDP representation has been very useful to represent WAN and HEN process networks by the use of two main methods: Big-M, HR reformulation (Lee and Grossmann, 2001). In the WAN problem, each disjunction is treated through a Big-M constraint. For example in Eq. (E5), M is a large number, $Yp^{j\to k}$ represents a binary variable, if $Yp^{j\to k}$ is 1 and M is large enough, then the water flow rate between j and k ($wp_i^{j\to k}$) could be zero or lower than M. In this way the disjunction programming is represented by a set of Big-M constraints (all equation can be found in (Boix et al., 2011)

$$wp^{j\to k} \le Yp^{j\to k} \times M \tag{E5}$$

Two main indicators can be evaluated for GDP: how large the reformulation is (the larger the reformulation is the most difficult will be for the solver to find a solution) and the relaxation, to analyze what happens with the feasible region when the binary variables are all transformed to continuous variables, if the new relaxed feasible solution is larger than in the MINLP problem, to find a feasible solution is more difficult, because of this, the value of the Big-M should be as tight as possible. It is very important to find a tight Big-M value to avoid the optimizer to branch in a wrong direction because of a weak relaxation. A general way to target the Big-M value can be done by trying a very large number and if a feasible solution is found, the Big-M value can be decreased gradually in order to help the optimizer to make good branching decisions, the Lagrange post-optimal analysis can also be useful. In this work we dealt directly with this problem and the sensitivity of the Big-M for the WAN optimization.

2.4.2. *HEN design and change of phase approach*

HEN optimization of Stage A.2.1 is solved following the Pinch method under the MER constraint, the TAC is then calculated. Stage A.2.2 is solved by mono-objective optimization (minimizing the total annual cost) in GAMS with the model presented in (Yee and Grossmann, 1990) solved by Couenne.

2.4.3. *Strategy for change of phase for the HEN design*

Some real problems present the particularity to have different inlet and outlet water temperatures for a process and a change

Table 1 – Case study process data. All references (except temperature) from (Feng et al., 2008; Gunaratnam et al., 2005).

Process j	Contaminant	C^{in}_{max} (ppm)	C^{out}_{max} (ppm)	Mass load (g h^{-1})	Inlet temp. (°C)	Outlet temp. (°C)	Temp. (New references)
Stream stripping	HC	0	15	750	180	110	Berné and Cordonnier (1991); IPP (2015)
	H_2S	0	400	20,000			
	SS	0	35	1750			
HDS-1	HC	20	120	3400	20	35	Gary et al. (2007); Oil and Gas Journal (1995)
	H_2S	300	12,500	414,800			
	SS	45	180	4590			
Desalter	HC	120	220	5600	75	75	Wauquier (1998) and also based on: Forero et al. (2001)
	H_2S	20	45	1400			
	SS	200	9500	520,800			
VDU	HC	0	20	160	250	40	Wauquier (1998); NPTEL (n.d.)
	H_2S	0	60	480			
	SS	0	20	160			
HDS-2	HC	50	150	800	'20	40	Gary et al. (2007); Oil and Gas Journal (1995)
	H_2S	400	8000	60,800			
	SS	60	120	480			

of phase could take place. For example, in the considered case study, in the steam stripping unit (a physical separation process where one or more components are removed from a liquid stream by a vapor stream) the steam enters at 180 °C at 10 bar pressure (see Table 1) and the condensed water exits the unit at 110 °C at 1.5 bar pressure (assumed targets based in Berné and Cordonnier, 1991; IPP, 2015). As the processes are considered as black boxes, the internal change of phase is beyond the limits of this work. Nevertheless, the change of phase of HEN targeted streams have to be taken into account. If for example, the WAN optimized network results in a water connection from freshwater (20 °C) to the steam stripper (inlet temperature = 180 °C), the change of phase occurs. In order to calculate the latent and sensible heat and to take advantage of the flexibility that the two-step methodology for the WAHEN design offers, the total heat for a specific stream with change of phase could be calculated as follows:

(1) Optimize the WAN in order to obtain the matches between processes and to target the hot and cold streams.
(2) Identify the heat capacity for liquid targets, in this work, a constant value of $c_p = 4.18$ kJ/kg °C is assumed.
(3) Identify the latent value of vaporization (LV) for a given steam target.
(4) Calculate the apparent heat capacity (fictive heat capacity) of the steam target by the use of in Eq. (E6). This value allows taking into account the heat amount when evaporation is required.

$$^{*}c_{ps} = \frac{LV_s + c_{p1}(T_s - T_l)}{(T_s - T_l)} \quad \text{(E6)}$$

where, $^{*}c_{ps}$ is the apparent heat capacity (kJ/kg °C) of the steam target. LV_s is the latent value (kJ/kg).of the steam target (previously identified), c_{pl} is the liquid water heat capacity (kJ/kg °C) and T_s and T_l are temperatures (°C) for steam and liquid targets respectively.

(5) Calculate the total heat (Q in kW) for the match as shown in Eq. (E7), where F is the flow rate.

$$Q = F\,(^{*}c_{ps})\,(T_s - T_l) \quad \text{(E7)}$$

With this procedure, the total heat when evaporation exists is obtained, however, it is necessary to distinguish between the sensible and the latent heat because only the former can be used for heat exchange between streams; the latent heat should be supplied by utilities. The latent heat (LH) can be found as follows:

$$LH = LV \times F \quad \text{(E8)}$$

The sensible heat (SH) could be calculated simply by in Eq. (E9):

$$SH = F\left(c_{pl}\right)(T_l - T_s) \quad \text{(E9)}$$

The validity of the calculation of $^{*}c_{ps}$ can be justified: Q = LH + SH. In the Pinch analysis and mathematical approach, it is not possible to work with the Q value because most of the heat is supplied by utilities. In order to avoid unnecessary complexity to the problem, the idea is to use the SH value to design the Heat Exchange Network and after the optimization adding the LH value which will be provided by the utilities (see an example in Fig. 10). In order to illustrate the procedure, the previous example of a stream with $T_l = 20$ °C and $T_s = 180$ °C is analyzed. Respective value of $c_{pl} = 4.18$ kJ/kg °C and $^{*}c_{ps} = 16.76$ kJ/kg °C are obtained with $LV_s = 2013.56$ kJ/kg. The flow rate is 50 t h^{-1}. A total heat value, (Q) equal to 37,255 kW is obtained (hot utility is required) with LH = 27,966 kW and SH = 9289 kW. The sensible heat is then used for match exchange in the mathematical model.

3. Case study

A case study for a simplified petroleum refinery (Gunaratnam et al., 2005) is treated and analyzed to design the WAHEN. The problem consists of 5 water processes (O1: stream stripping, O2: hydro desulfurization (HDS-1), O3: desalter, O4: vacuum distillation unit (VDU) and O5: HDS-2) and 3 treatment units (T1: steam-stripping column, T2: biological treatment unit, T3: API separator) with three contaminants (i.e., hydrocarbon (HC), hydrogen sulfide (H_2S), and suspended solids (SS)). The regeneration units are defined by their given efficiency depending on the contaminant under treatment. The regeneration units treat wastewater up to a fixed post-regeneration concentration for each contaminant. The database presented in Tables 1 and 2 have been used for the WAN design. In

Table 2 – Performance of the treatment units.

Regeneration unit l	Removal ratio Gunaratnam et al. (2005)			α based on Bagajewicz and Faria (2009)	Inlet temp. (°C)	Outlet temp. (°C)	Temp. reference
	HC	H_2S	SS				
T1	0	0.999	0	3.13	110	35	Berné and Cordonnier (1991)
T2	0.7	0.9	0.98	2.34	30	30	
T3	0.95	0	0.5	0.89	35	35	

Table 3 – Cost and operating parameters for the HEN (Zhou et al., 2015).

Parameter	Description	Value	Unit
C_i^{FW}	Cost of fresh water	0.375	\$ per T
C_{HU}	Cost of hot utility	377	\$ per kW (annualized cost)
C_{CU}	Cost of cold utility	189	\$ per kW (annualized cost)
C_{fixed}	Fixed charges for heat exchangers and utility units	8000	\$ per year
C_{area}	Area cost coefficient for heat exchangers and utility units	1200	\$ per m^2 (annualized cost)
β	Exponent parameter for area cost	1	Assumption
$U_{l,m} - h_{l,m}$	Overall and partial heat transfer coefficients for hot and cold streams	$U = 0.8$, $h = 1.6$	kW/(m^2 °C)
$U_{m,HU} - h_{m,HU}$	Overall and partial heat transfer coefficients for cold stream and hot utility	$U = 1.2$, $h = 4.8$	kW/(m^2 °C)
$U_{k,CU} - h_{l,CU}$	Overall and partial heat transfer coefficients for hot stream and cold utility	$U = 0.8$, $h = 1.6$	kW/(m^2 °C)
T_{HU}^{in}	Inlet temperature of hot utility	150	°C
T_{HU}^{out}	Outlet temperature of hot utility	150	°C
T_{CU}^{in}	Inlet temperature of cold utility	10	°C
T_{CU}^{out}	Outlet temperature of cold utility	20	°C
H^{op}	Hours of plant operation	8000	H per year
c_p	Heat capacity of water	4.18	kW/(kg °C)

previous works (Gunaratnam et al., 2005; Feng et al., 2008; Boix et al., 2011), the HEN optimization has not been implemented due to lack of data. As previously explained, the originality of this work is that different input and output temperatures are integrated in each process and regeneration unit and that the change of phase of some streams in the HEN can take place. For the abovementioned simplified petroleum refinery and processes, high temperatures are needed in some cases and the inlet and outlet temperatures are different. Additional information is required for the HEN design as economic and technical data related to heat exchangers and utilities and their respective costs. They are displayed in Table 3.

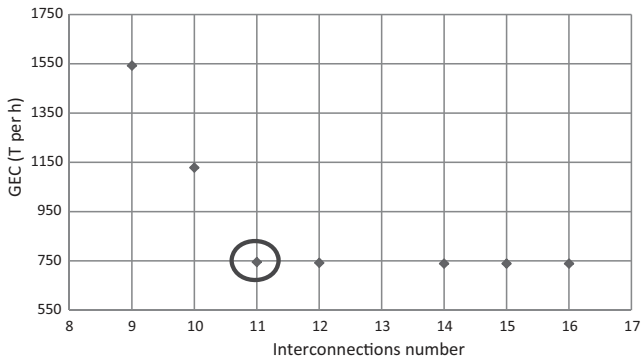

Fig. 4 – Minimum GEC for each value of connections (De-León Almaraz et al., 2015).

4. Results and discussion

4.1. *Stage A.1: Water Allocation Network*

Some previous results obtained for Water Allocation Network by multi-objective optimization are presented in (De-León Almaraz et al., 2015). In this work, we focus only in the superstructure obtained by minimizing the GEC and the interconnections as previously explained in Section 2. The MINLP model involves 234 continuous variables, 77 discrete variables and 455 equations. The optimization runs were implemented with an Intel (R) Core (TM) 17-3540 CPU @3.00 GHz processor machine.

The bi-objective optimization parameterized by the interconnection number (between processes or regeneration units) is carried out in the range of 9–16 connections optimizing the GEC. According to the Pareto front (see Fig. 4), with an increasing interconnection number, the GEC decreases but, above 14 interconnections, the GEC remains almost the same, this can be due to the fact that the number of connections does not have an impact on the cost. If both the GEC and interconnection numbers are considered, the most preferred network includes 11 connections between processes/treatment units or 15 total connections considering discharge. According to the TOPSIS analysis this configuration uses 58 T h^{-1} of freshwater and regenerates 164 T h^{-1}of used water. The GEC of this network solution is 745 T h^{-1} when *FW* and *RW* flow rates are considered and 1071 T h^{-1} when also the *WW* is taken into account. The WAN network is shown in Fig. 5. It is highlighted that the main advantage of this configuration is the use of less interconnections where low flow rates are discarded. The results obtained in the study of (Feng et al., 2008) are useful for validation proposes. The main difference when using the number of interconnections as a criterion to be optimized is that low water flow rates are discarded. In Fig. 5, the temperatures are displayed, with this information is possible to target hot and cold streams and to work on the design of the HEN. A difference in inlet and outlet temperature is given in

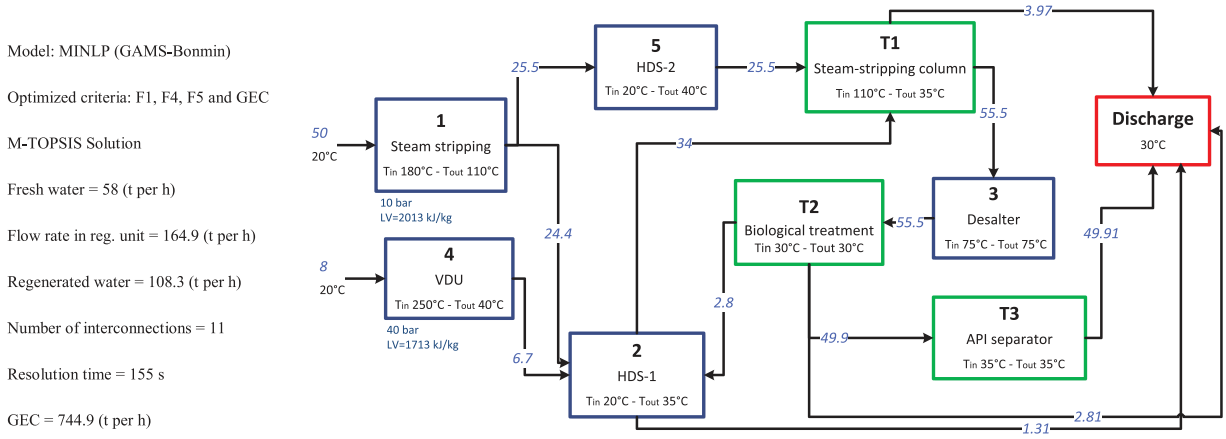

Fig. 5 – WAN solution for the MINLP formulation.

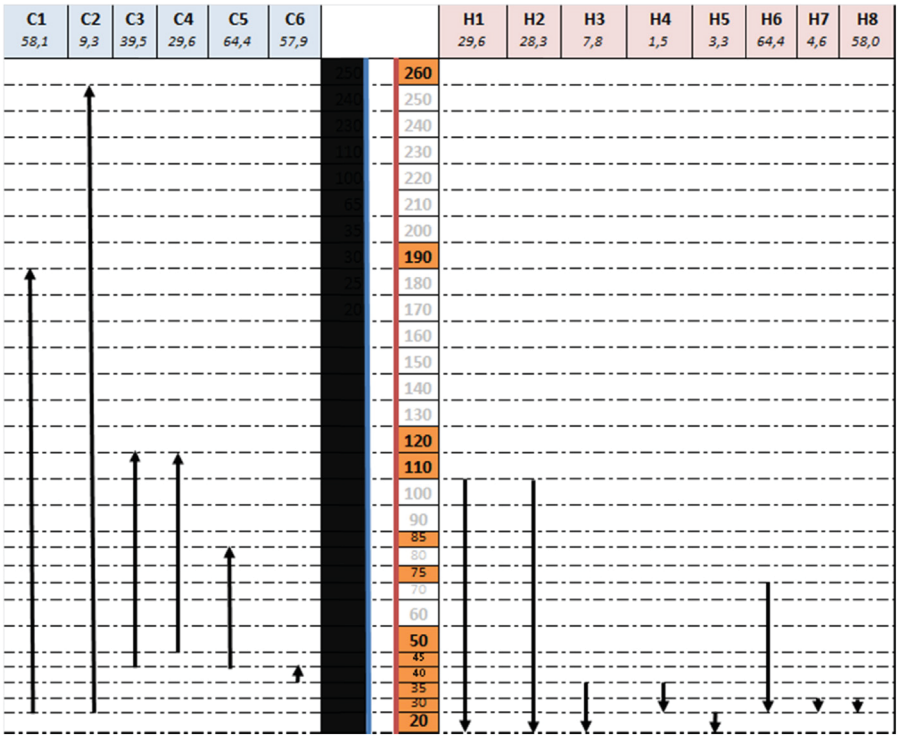

Fig. 6 – Temperature intervals representation.

some processes (e.g., the inlet water temperature in process 1 (steam stripping) is 180 °C (steam with a latent heat value of 2013.56 kJ/kg at 10 bar) and its outlet temperature is 110 °C at 1.4 bar). For this case study, the phase change has been analyzed concluding that for vapor and liquid streams is possible to distinguish between sensible and latent heat. The first one can be used for heat exchange between streams; the last one should be supplied by utilities. An exhaustive research of temperature targets has been carried out because these parameters are very sensible in the model determining the HEN design.

4.2. *Stage A.2.1: Heat Exchange Network by Pinch analysis*

From the WAN configuration, 6 cold streams and 8 hot streams are targeted. In order to have reference results for our case study in the HEN stage, the heuristic Pinch methodology has been applied. The objective is to identify the solutions with the minimal energy requirement (MER). The temperature intervals are shown in Fig. 6. In the Grand Composite Curve (see Fig. 7) the Pinch point is found at 40 °C, the need of 1638 kW of CU and 12,334 kW of HU are detected. In our specific case study, 32,000 kW are necessary for evaporation purposes but this is latent heat and cannot be supplied by HU. For the streams where saturated water vapor is used and the phase change takes place, the pressure and latent values are used. The sensible heat is then used for match exchange. The resulting configuration is presented in Fig. 8 where no heat exchangers are placed across the pinch point. This network has a total of 22 heat exchangers and requires a total of 6985 kg and a total annual cost of M$ 6.43 having the main impact in utility cost (M$ 4.96). The detailed cost for utilities, heat exchangers surface, water, etc. can be found in Table 4.

4.3. *Stage A.2.2: Heat Exchange Network by mathematical programming*

The stage-wise model resulted for the case study in NOK = 4 even if the maximum number of streams is 8, then we have

Table 4 – Cost results for HEN design for Pinch analysis and mathematical model.

A.2.1 Pinch analysis						A.2.2 Mathematical model					
Ex. number	Match	Q (kW)	Area (m^2)	Exchanger cost (M$)	Utility (M$)	Ex. number	Match	Q (kW)	Area (m^2)	Exchanger cost (M$)	Utility (M$)
1	H1-C1	2073	112.4	$ 0.134	–	1	H1.C2.1	424	29.5	$ 0.035	–
2	H2-C1	1984	244.6	$ 0.293	–	2	H1.C2.3	140	12.0	$ 0.014	–
3	H5d-C6	470	30.7	$ 0.036	–	3	H1.C3.1	1500	90.8	$ 0.108	–
4	H5e-C2	1184	148.0	$ 0.177	–	4	H2.C1.2	894	66.5	$ 0.079	–
5	H5a-C2	279	30.3	$ 0.036	–	5	H2.C1.3	317	30.6	$ 0.036	–
6	H5b-C3	33	3.8	$ 0.004	–	6	H2.C4.1	869	27.2	$ 0.032	–
7	H5c-C5	290	36.3	$ 0.043	–	7	H6.C1.3	707	67.8	$ 0.081	–
8	C1-H5	93	19.6	$ 0.023	–	8	H6.C5.1	1761	174.1	$ 0.208	–
9	C2-H1	580	763	$ 0.091	–						
Total		6985	702.0	$ 0.842	–	*Total*		6611	498.3	$ 0.598	$–
Hot utility						Hot utility					
1	HU-C1	4653	33.6	$ 0.040	$ 1.754	1	HU-C1	7376	37.2	$ 0.044	$ 2.780
2	HU-C2	1731	23.0	$ 0.027	$ 0.652	2	HU-C2	1575	12.9	$ 0.015	$ 0.593
3	HU-C3	1776	8.6	$ 0.010	$ 0.669	3	HU-C3	1462	6.2	$ 0.007	$ 0.551
4	HU-C4	2072	9.4	$ 0.011	$ 0.781	4	HU-C4	1202	5.0	$ 0.006	$ 0.453
5	HU-C5	2107	8.7	$ 0.010	$ 0.794	5	HU-C5	814	3.1	$ 0.003	$ 0.306
						6	HU-C6	289	0.9	$ 0.001	$ 0.109
Total		12,339	83.4	$ 0.100	$ 4.651	*Total*		12,719	65.3	$ 0.078	$ 4.794
Cold utility						Cold utility					
1	CU-H1	499	47.4	$ 0.056	$ 0.094	1	CU-H1	600	51.6	$ 0.061	$ 0.113
2	CU-H2	566	49.0	$ 0.058	$ 0.106	2	CU-H2	465	44.9	$ 0.053	$ 0.087
3	CU-H3	155	13.4	$ 0.016	$ 0.029	3	CU-H3	156	13.5	$ 0.016	$ 0.029
4	CU-H4	15	0.9	$ 0.001	$ 0.002	4	CU-H4	15	0.9	$ 0.001	$ 0.002
5	CU-H5	32	4.0	$ 0.004	$ 0.006	5	CU-H5	33	4.1	$ 0.005	$ 0.006
6	CU-H6	63	5.2	$ 0.006	$ 0.011	6	CU-H6	428	29.3	$ 0.035	$ 0.080
7	CU-H7	23	1.7	$ 0.002	$ 0.004	7	CU-H7	29	2.1	$ 0.002	$ 0.005
8	CU-H8	289	20.8	$ 0.024	$ 0.054	8	CU-H8	290	20.9	$ 0.025	$ 0.054
Total		1642	142.5	$ 0.171	$ 0.310	*Total*		2017	167.3	$ 0.200	$ 0.381

Fixed cost for 22 heat exchangers = M$ 0.176.
Water cost = M$ 0.174.

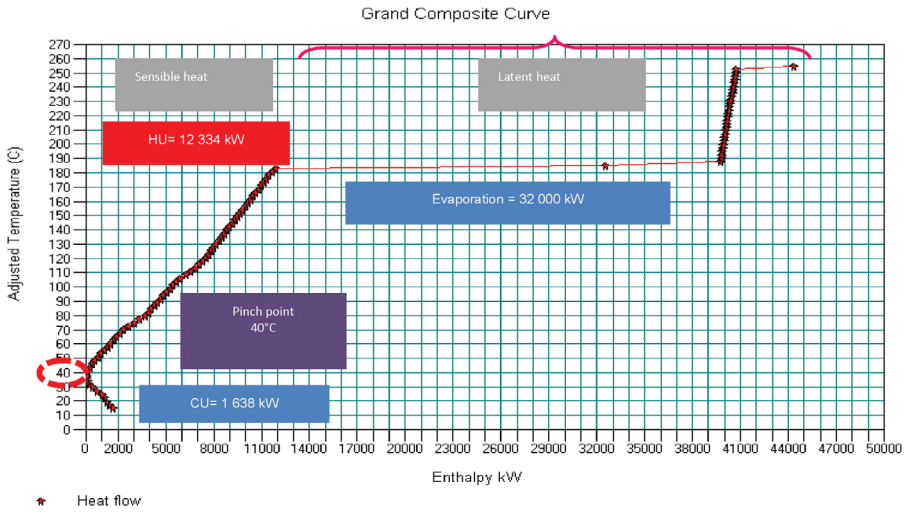

Fig. 7 – Grand Composite Curve.

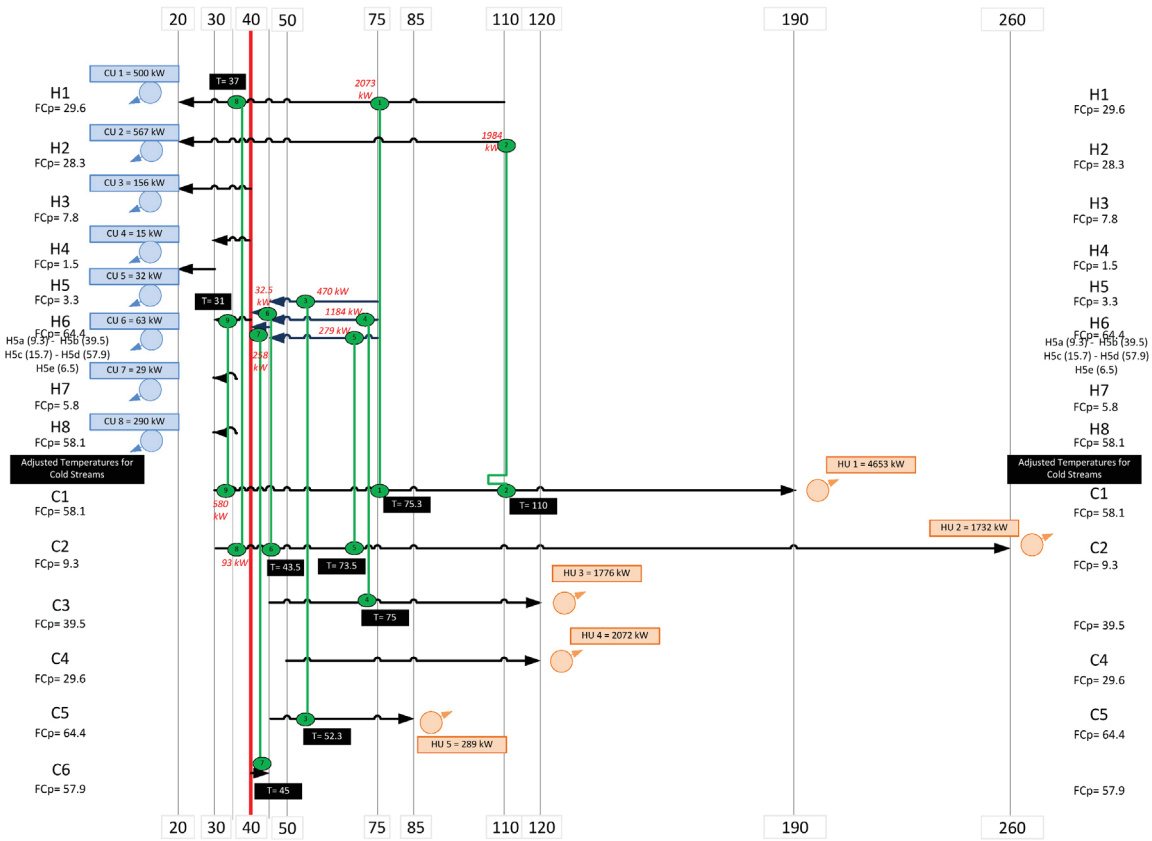

Fig. 8 – HEN configuration by Pinch analysis.

Table 5 – General results of Pinch and Mathematical approaches.

Approach	Results	New equipment[a]	Total Area (m^2)	Q (kW)	Investment cost (M$)	Utility cost (M$)	TAC (M$)
Pinch analysis	Exchangers	9	702.00	6985	1.28	4.96	6.43
	Heaters	5	83.50	12,339			
	Coolers	8	142.50	1642			
	Total	22	928	20,966			
HEN synthesis	Exchangers	8	498.40	6611	1.05	5.17	6.40
	Heaters	6	65.25	12,719			
	Coolers	8	167.35	2017			
	Total	22	731	21,347			

[a] Some heat exchangers can be join for both cases.

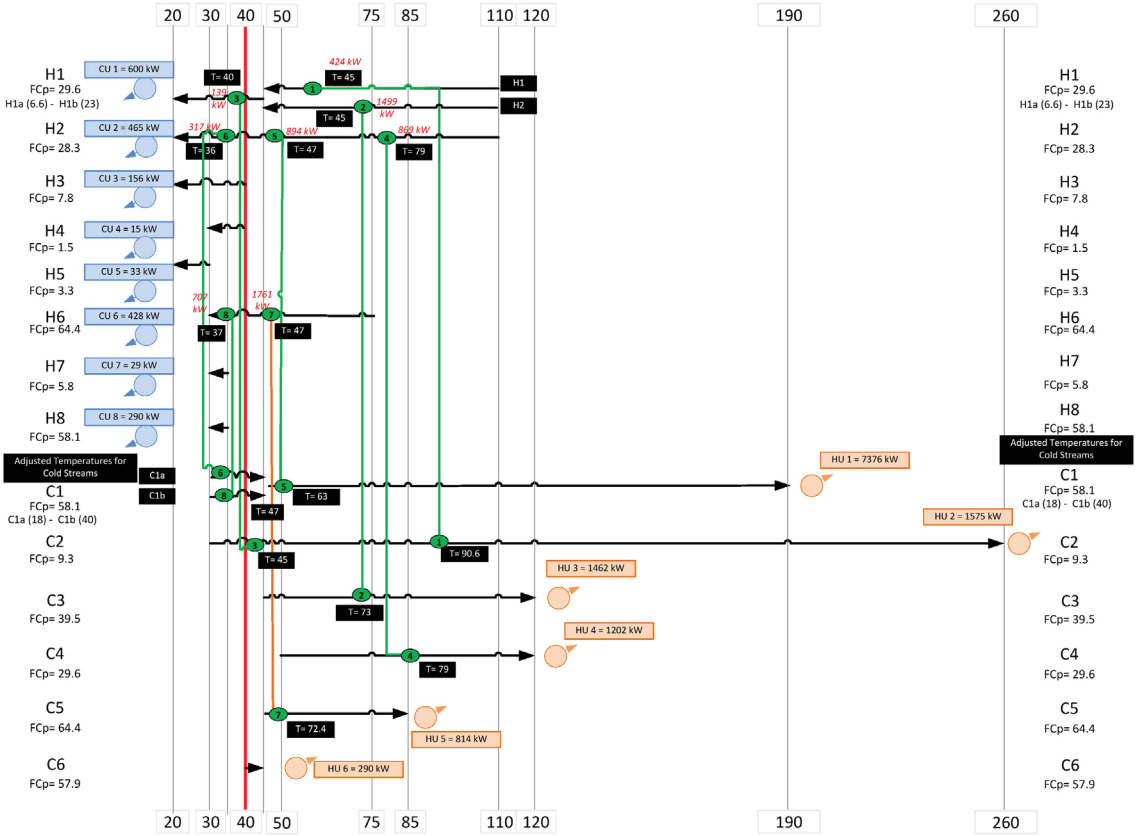

Fig. 9 – HEN configuration by mathematical programming.

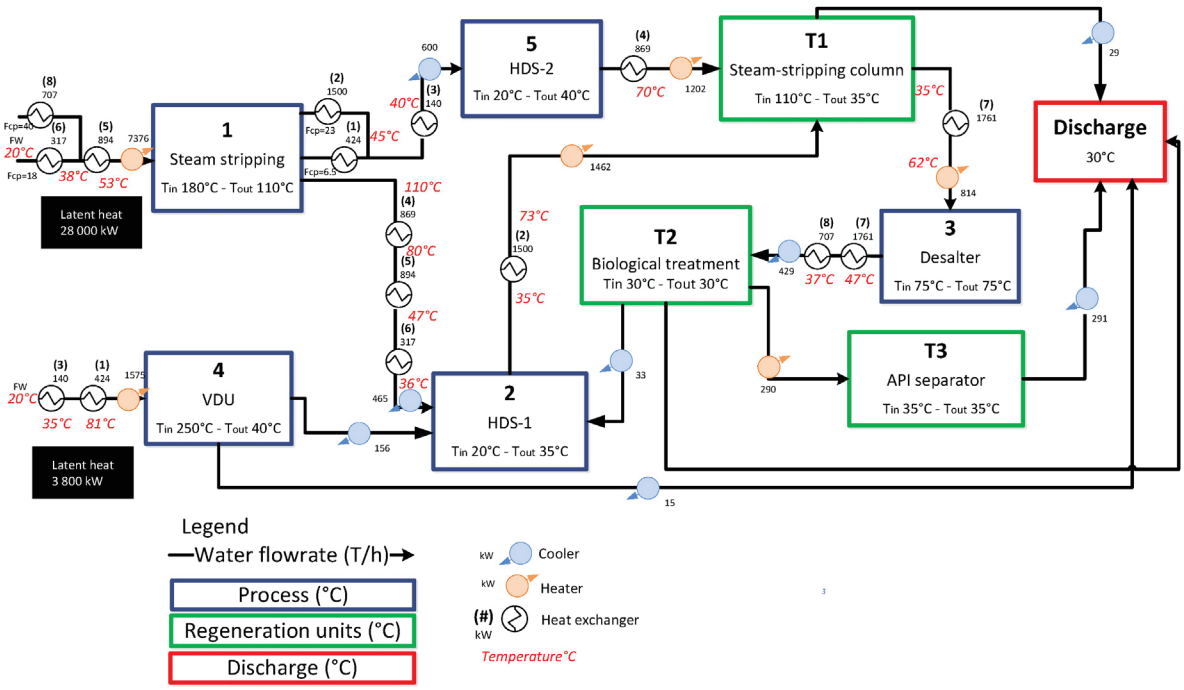

Fig. 10 – Optimized WAHEN configuration.

a four-stage superstructure where exchange may take place across the pinch point. The model size involves 627 continuous variables and 158 discrete variables. The GAMS solver used is Couenne with a computational time of around 2.5 h. The resulting HEN is displayed in Fig. 9. This configuration is slightly cheaper than the one designed by Pinch method (6.4 vs. 6.43 M$). The total number of heat exchangers is the same but the distribution of heat exchanger is different. The cost for utilities, heat exchangers surface, water, etc. is presented in detail in Table 4.

4.4. *Stage B: Simultaneous representation of WAHEN*

The result comparison between both HEN approaches can be found in Table 5. The WAHEN design is presented in Fig. 10. The optimized WAN configuration (see Fig. 5) is coupled

with the network obtained by the mathematical programming approach because these resulted in a cheaper network (Fig. 9). This type of representations seems useful for real time implementation purposes in order to assess the feasibility of the network, to add extra constraints, to avoid certain matches and to set preferred matches, etc.

5. Conclusions and perspectives

In this paper, a sequential design methodology for WAHEN has been developed and applied to a large multi-contaminant network considering 5 processes, 3 regeneration units and 3 contaminants. A detailed preliminary study on the design of reliable databases was carried out in this study and is mandatory in real projects before the application of our methodology, because the WAN and HEN problems are mainly modeled by balance equations through equality constraints. Consequently, any change in the input parameters has a great influence on the results of both the water and energy networks. In the first WAN optimization step by multi-objective optimization, the framework of (Boix et al., 2011) was extended by an optimization step minimizing the interconnections and the GEC through lexicographic and ε-constraint methods. Taking into account several contaminants and regeneration units results in a complex network design but the proposed methodology guarantees a good trade-off solution from the Pareto front. The flow sheet obtained from this step was used as a starting point to design the HEN by two well-known methodologies for comparison purposes: Pinch and mathematical programming (Yee and Grossmann, 1990). The Pinch analysis is easy to implement and a good solution is found by the minimization of the energy requirement. In the considered example, 6 cold streams and 8 hot streams are targeted and in the specific case study, the composite curves show that a large amount of energy is needed for evaporation because in some processes a phase change takes place. Only sensible heat is considered for potential matches in the HEN. In this work, the usefulness of hybrid conceptions (mathematical programming for WAN design and conceptual tools for HEN design) was validated. Moreover, the problem of heat exchanger network synthesis (HENs) resulted in a large-scale combinatorial problem with a nonlinear mixed integer formulation. The total annual cost was optimized. A network with relatively good performances is found rapidly but the search for a better solution than the one obtained with the Pinch analysis is more computational intensive. The implementation of changes to the initial code is easy to implement and competitive networks can be found. The final representation of the WAHEN networks could be useful for practical purposes in order to validate the feasibility of matches and to include user preferences as new constraints in the model. The main advantage of the HEN mathematical model is the possibility to couple it with the WAN formulation to move forward the one-step optimization approach which will constitute the basis of our further works with the consideration of non-isothermal mixing.

Acknowledgements

This work was supported by the French National Research Agency (ANR) in the framework of the French-Chinese WAENO project.

Appendix A.

Water Allocation Network

Mathematical model (Boix et al., 2011).

Nomenclature

Greek letters	
α	cost factor for regenerated water
β	cost factor for waste water
Subscripts	
i	component, with $i = 1$ for fresh water and $i \neq 1$ for contaminants
Superscript	
j, k	processes
m, n	regeneration units
Parameters	
M_i^j	amount of contaminant i generated by the process j (g/l)
$C_{\max ij}^{in}$	maximal inlet concentration of contaminant i for the process j (ppm)
$C_{\max ij}^{out}$	maximal outlet concentration of contaminant i for the process j (ppm)
U	a large value
$RR_{i,m}$	performance of the treatment unit m for the contaminant i (fractional yields)
Variables	
w_i^j	freshwater flow rate going to the process j ($T\,h^{-1}$)
$wp_i^{j\to k}$	partial flow rate of the component i between two processes j and k ($T\,h^{-1}$)
$wpr_i^{j\to m}$	partial flow rate of the component i from the process j to the regeneration unit m ($T\,h^{-1}$)
wd_i^j	discharged partial mass flow of the component i from the process j ($T\,h^{-1}$)
$wr_i^{m\to n}$	partial mass flow of the component i between two regeneration units m and n ($T\,h^{-1}$)
$wrp_i^{m\to j}$	partial mass flow of the component i from the regeneration unit m to the process j ($T\,h^{-1}$)
wrd_i^m	discharged partial mass flow of the component i from the regeneration unit m ($T\,h^{-1}$)
$C_{pi,j}^{in}$	inlet concentration of contaminant i for the process j (ppm)
$C_{pi,j}^{out}$	outlet concentration of contaminant i for the process j (ppm)
$C_{ri,m}^{in}$	inlet concentration of contaminant i for the regeneration m (ppm)
$C_{ri,m}^{out}$	outlet concentration of contaminant i for the regeneration m (ppm)
CD_i	discharged concentration of contaminant i (ppm)
ENC	equivalent number of connections

Binary variables

Yw_j	1 if freshwater flow rate exists for the process j or 0 otherwise
$Yp_{j,k}$	1 if water flow rate between two processes j and k exists or 0 otherwise
$Ypr_{j,m}$	1 if water flow rate going from the process j to regeneration unit m exists or 0 otherwise
$Yr_{m,n}$	1 if water flow rate between two regeneration units m and n exists or 0 otherwise
$Yrp_{m,j}$	1 if water flow rate going from the regeneration unit m to the process j exists or 0 otherwise
Ypd_j	1 if discharged water flow rate going from process j exists or 0 otherwise
Yrd_m	1 if discharged water flow rate going from the regeneration unit m exists or 0 otherwise;

Objective function

F_1	fresh water flow rate at the network entrance ($T\,h^{-1}$)
F_2	water flow rate at inlets of regeneration units ($T\,h^{-1}$)
F_w	waste water flow rate ($T\,h^{-1}$)
F_3	number of connections into the network
GEC	global equivalent cost in fresh water ($T\,h^{-1}$)
R	contribution of the regenerated water flow rate in GEC ($T\,h^{-1}$)
W	contribution of the waste water flow rate in GEC ($T\,h^{-1}$)

(a) Objective functions

$$F_1 = \sum_j w_i^j \tag{A.1}$$

$$F_2 = \left(\sum_l \left(\sum_m w_r^{m\to i} + \sum_j w_{pr}^{j\to l}\right)\right) \tag{A.2}$$

$$F_3 = \sum_K Y_K \tag{A.3}$$

$$GEC = F_1 + \alpha F_2 + \beta F_W \tag{A.4}$$

(b) Flow rates mass balances:

- For a given process j, the inlet water ($i = 1$) flow rate is equal to the outlet water flow rate:

$$w_i^j + \sum_k wp_i^{k\to j} + \sum_m wrp_i^{m\to j} = wd_i^j + \sum_k wp_i^{j\to k} + \sum_m wpr_i^{j\to m} \tag{A.5}$$

- For a given regeneration unit m, the inlet water flow rate is equal to the outlet water flow rate:

$$\sum_n wr_i^{n\to m} + \sum_j wpr_i^{j\to m} = wrd_i^m + \sum_j wrp_i^{m\to j} + \sum_n wr_i^{m\to n} \tag{A.6}$$

- The overall fresh water flow rate is equal to the total discharged water flow rate: v.

$$\left(w_i^j + \sum_k wp_{i>1}^{k\to j} + \sum_m wrp_{i>1}^{m\to j}\right) C_{pi,j}^{in} + M_{i>1}^j = \left(w_i^j + \sum_k wp_{i>1}^{k\to j} + \sum_m wrp_{i>1}^{m\to j}\right) C_{pi,j}^{out} \tag{A.7}$$

(c) Contaminant mass balances:

$$\sum_k wp_{i>1}^{k\to j} C_{pi,j}^{out} + \sum_m wrp_{i>1}^{m\to j} C_{ri,m}^{out} = C_{pi,j}^{in}\left(w_i^j + \sum_k wp_{i>1}^{k\to j} + \sum_m wpr_{i>1}^{m\to j}\right) \tag{A.8}$$

- For a given regeneration unit m, the inlet contaminant flow rate is equal to the outlet contaminant flow rate:

$$\sum_n wr_{i>1}^{n\to m} + \sum_j wpr_{i>1}^{j\to m} = wrd_{i>1}^m + \sum_j wrp_{i>1}^{m\to j} + \sum_n wr_{i>1}^{m\to n} \tag{A.9}$$

- The total discharged contaminant flow rate is equal to the sum of contaminant mass loads of each process j:

$$\sum_m wrd_i^m C_{ri,j}^{out} + \sum_j wd_i^j C_{pi,j}^{out} = CD_i\left(\sum_m wrd_i^m + \sum_j wd_i^j\right) \tag{A.10}$$

(d) Constraints

- *Contaminants*

$$C_{pi,j}^{in} \le C_{max\,ij}^{in} \tag{A.11}$$

$$C_{pi,j}^{out} \le C_{max\,ij}^{out} \tag{A.12}$$

$$C_{ri,j}^{in} - C_{ri,j}^{out} = C_{ri,j}^{in} RR_{i,m} \tag{A.13}$$

- *Binary variables*

$$w_i^j \le Yw^j \times U \tag{A.14}$$

$$wp_i^{j\to k} \le Yp^{j\to k} \times U \tag{A.15}$$

$$\mathrm{wpr}_{i>1}^{j\to m} \le \mathrm{Ypr}^{j\to m} \times U \tag{A.16}$$

$$\mathrm{wd}_{i>1}^{j} \le \mathrm{Ypd}^{j} \times U \tag{A.17}$$

$$\mathrm{wr}_{li>1}^{n\to mj} \le \mathrm{Yr}^{n\to mj} \times U \tag{A.18}$$

$$\mathrm{wrp}_{i>1}^{m\to j} \le \mathrm{Yrp}^{m\to j} \times U \tag{A.19}$$

$$\mathrm{wrd}_{i>1}^{m} \le \mathrm{Yrd}^{m} \times U \tag{A.20}$$

References

Agarwal, A., Gupta, S.K., 2008. Multiobjective optimal design of heat exchanger networks using new adaptations of the elitist nondominated sorting genetic algorithm, NSGA-II. Ind. Eng. Chem. Res. 47, 3489–3501, http://dx.doi.org/10.1021/ie070805g.

Ahmetović, E., Ibrić, N., Kravanja, Z., Grossmann, I.E., 2015. Water and energy integration: a comprehensive literature review of non-isothermal water network synthesis. Comput. Chem. Eng. 82, 144–171, http://dx.doi.org/10.1016/j.compchemeng.2015.06.011.

Ahmetović, E., Kravanja, Z., 2014. Simultaneous optimization of heat-integrated water networks involving process-to-process streams for heat integration. Appl. Therm. Eng. 62, 302–317, http://dx.doi.org/10.1016/j.applthermaleng.2013.06.010.

Ahmetović, E., Kravanja, Z., 2013. Simultaneous synthesis of process water and heat exchanger networks. Energy 57, 236–250, http://dx.doi.org/10.1016/j.energy.2013.02.061.

Allen, B., Savard-Goguen, M., Gosselin, L., 2009. Optimizing heat exchanger networks with genetic algorithms for designing each heat exchanger including condensers. Appl. Therm. Eng. 29, 3437–3444, http://dx.doi.org/10.1016/j.applthermaleng.2009.06.006.

Alva-Argáez, A., Kokossis, A.C., Smith, R., 2007. The design of water-using systems in petroleum refining using a water-pinch decomposition. Chem. Eng. J. 128, 33–46, http://dx.doi.org/10.1016/j.cej.2006.10.001.

Alva-Argáez, A., Vallianatos, A., Kokossis, A., 1999. A multi-contaminant transhipment model for mass exchange networks and wastewater minimisation problems. Comput. Chem. Eng. 23, 1439–1453, http://dx.doi.org/10.1016/S0098-1354(99)00303-8.

Bagajewicz, M., 2000. A review of recent design procedures for water networks in refineries and process plants. Comput. Chem. Eng. 24, 2093–2113, http://dx.doi.org/10.1016/S0098-1354(00)00579-2.

Bagajewicz, M.J., Faria, D.C., 2009. On the appropriate architecture of the water/wastewater allocation problem in process plants. In: Jeżowski, J., Thullie, J. (Eds.), *Computer Aided Chemical Engineering*, Proceedings of the 19th European Symposium on Computer Aided Process Engineering. Elsevier, pp. 1–20.

Bagajewicz, M.J., Rivas, M., Savelski, M.J., 2000. A robust method to obtain optimal and sub-optimal design and retrofit solutions of water utilization systems with multiple contaminants in process plants. Comput. Chem. Eng. 24, 1461–1466, http://dx.doi.org/10.1016/S0098-1354(00)00413-0.

Berné, F., Cordonnier, J., 1991. Traitement Des Eaux, 1st ed. Technip, Paris et Institut Français du Pétrole, Paris, France.

Bogataj, M., Bagajewicz, M.J., 2008. Synthesis of non-isothermal heat integrated water networks in chemical processes. Comput. Chem. Eng. 32, 3130–3142, http://dx.doi.org/10.1016/j.compchemeng.2008.05.006.

Boix, M., Montastruc, L., Pibouleau, L., Azzaro-Pantel, C., Domenech, S., 2011. A multiobjective optimization framework for multicontaminant industrial water network design. J. Environ. Manag. 92, 1802–1808, http://dx.doi.org/10.1016/j.jenvman.2011.02.016.

Boix, M., Pibouleau, L., Montastruc, L., Azzaro-Pantel, C., Domenech, S., 2012. Minimizing water and energy consumptions in water and heat exchange networks. Appl. Therm. Eng. 36, 442–455, http://dx.doi.org/10.1016/j.applthermaleng.2011.10.062.

Brooke, A., Kendrick, D., Meeraus, A., Rosenthal, R.E., 1988. GAMS, A User's Guide. Scientific Press, Washington.

Chen, J.J.J., 1987. Comments on improvements on a replacement for the logarithmic mean. Chem. Eng. Sci. 42, 2488–2489, http://dx.doi.org/10.1016/0009-2509(87)80128-8.

Chen, Z., Hou, Y., Li, X., Wang, J., 2014. Simultaneous optimization of water and heat exchange networks. Korean J. Chem. Eng. 31, 558–567, http://dx.doi.org/10.1007/s11814-013-0236-z.

De-León Almaraz, S., Boix, M., Azzaro-Pantel, C., Montastruc, L., Domenech, S., 2015. Design of a multi-contaminant water allocation network using multi-objective optimization. In: Gernaey, Krist V., Huusom, Jakob K., Gani, Rafigul (Eds.), *Computer Aided Chemical Engineering*, Proceedings of the 12th International Symposium on Process Systems Engineering and 25th European Symposium on Computer Aided Process Engineering. Elsevier, Copenhagen, Denmark, pp. 911–916.

Deng, C., Feng, X., Wen, Z., 2013. Optimization of water network integrated with process models. Clean Technol. Environ. Policy 15, 473–487, http://dx.doi.org/10.1007/s10098-013-0609-3.

Dolan, W.B., Cummings, P.T., Le Van, M.D., 1990. Algorithmic efficiency of simulated annealing for heat exchanger network design. Comput. Chem. Eng. 14, 1039–1050, http://dx.doi.org/10.1016/0098-1354(90)85001-Q.

Dong, H.-G., Lin, C.-Y., Chang, C.-T., 2008. Simultaneous optimization approach for integrated water-allocation and heat-exchange networks. Chem. Eng. Sci. 63, 3664–3678, http://dx.doi.org/10.1016/j.ces.2008.04.044.

Feng, X., Bai, J., Wang, H., Zheng, X., 2008. Grass-roots design of regeneration recycling water networks. Comput. Chem. Eng. 32, 1892–1907, http://dx.doi.org/10.1016/j.compchemeng.2007.10.006.

Foo, D.C.Y., 2009. State-of-the-art review of pinch analysis techniques for water network synthesis. Ind. Eng. Chem. Res. 48, 5125–5159, http://dx.doi.org/10.1021/ie801264c.

Forero, J., Duque, J., Diaz, J., Nuñez, A., Guarin, F., Carvajal, F., 2001. New contact system in crude oil desalting process. CTF—Cienc. Tecnol. Futuro. 2, 81–91.

Gary, J., Handwerk, G., Kaiser, M., 2007. Petroleum Refining: Technology and Economics, 5th ed. CRC Press, USA.

Grossmann, I.E., Martín, M., Yang, L., 2014. Review of optimization models for integrated process water networks and their application to biofuel processes. Curr. Opin. Chem. Eng., Energy Environ. Eng./Reaction Eng. 5, 101–109, http://dx.doi.org/10.1016/j.coche.2014.07.003.

Gunaratnam, M., Alva-Argáez, A., Kokossis, A., Kim, J.-K., Smith, R., 2005. Automated design of total water systems. Ind. Eng. Chem. Res. 44, 588–599, http://dx.doi.org/10.1021/ie040092r.

Haimes, Y., Lasdon, L., Wismer, D., 1971. On a bicriterion formulation of the problems of integrated system identification and system optimization. IEEE Trans. Syst. Man Cybern. 1, 296–297, http://dx.doi.org/10.1109/tsmc.1971.4308298.

Hou, Y., Wang, J., Chen, Z., Li, X., Zhang, J., 2014. Simultaneous integration of water and energy on conceptual methodology for both single- and multi-contaminant problems. Chem. Eng. Sci. 117, 436–444, http://dx.doi.org/10.1016/j.ces.2014.07.004.

Hu, N., Feng, X., Deng, C., 2011. Optimal design of multiple-contaminant regeneration reuse water networks with process decomposition. Chem. Eng. J. 173, 80–91, http://dx.doi.org/10.1016/j.cej.2011.07.040.

Ibrić, N., Ahmetović, E., Kravanja, Z., 2014. Simultaneous optimization of water and energy within integrated water networks. Appl. Therm. Eng., PRES'13 Process Integr. 70, 1097–1122, http://dx.doi.org/10.1016/j.applthermaleng.2014.03.019.

IPP, 2015. International Process Plants [WWW Document]. URL ⟨http://marketing.ippe.com/acton/form/9185/0008:d-0001/1/index.htm⟩ (accessed 11.17.15).

Jeżowski, J., Bochenek, R., Poplewski, G., 2007. On application of stochastic optimization techniques to designing heat

exchanger- and water networks. Chemical Engineering and Processing. Process Intensification. Special Issue on Process Optimization and Control in Chemical Engineering and Processing, vol. 46, pp. 1160–1174. doi:10.1016/j.cep.2007.02.024.
Karuppiah, R., Grossmann, I.E., 2006. Global optimization for the synthesis of integrated water systems in chemical processes. Comput. Chem. Eng. 30, 650–673, http://dx.doi.org/10.1016/j.compchemeng.2005.11.005.
Khorram, E., Zarepisheh, M., Ghaznavi-ghosoni, B.A., 2010. Sensitivity analysis on the priority of the objective functions in lexicographic multiple objective linear programs. Eur. J. Oper. Res. 207, 1162–1168, http://dx.doi.org/10.1016/j.ejor.2010.05.016.
Kim, J., Kim, J., Kim, J., Yoo, C., Moon, I., 2009. A simultaneous optimization approach for the design of wastewater and heat exchange networks based on cost estimation. J. Clean. Prod. 17, 162–171, http://dx.doi.org/10.1016/j.jclepro.2008.04.005.
Lee, S., Grossmann, I.E., 2001. A global optimization algorithm for nonconvex generalized disjunctive programming and applications to process systems. Comput. Chem. Eng. 25, 1675–1697, http://dx.doi.org/10.1016/S0098-1354(01)00732-3.
Leewongtanawit, B., Kim, J.-K., 2008. Synthesis and optimisation of heat-integrated multiple-contaminant water systems. Chem. Eng. Process. Process Intensif. 47, 670–694, http://dx.doi.org/10.1016/j.cep.2006.12.018.
Liao, Z., Rong, G., Wang, J., Yang, Y., 2011. Systematic optimization of heat-integrated water allocation networks. Ind. Eng. Chem. Res. 50, 6713–6727, http://dx.doi.org/10.1021/ie1016392.
Linnhoff, B., Hindmarsh, E., 1983. The pinch design method for heat exchanger networks. Chem. Eng. Sci. 38, 745–763, http://dx.doi.org/10.1016/0009-2509(83)80185-7.
Liu, S., Papageorgiou, L.G., 2013. Multiobjective optimisation of production, distribution and capacity planning of global supply chains in the process industry. Omega 41, 369–382, http://dx.doi.org/10.1016/j.omega.2012.03.007.
Liu, Z., Luo, Y., Yuan, X., 2015. Simultaneous integration of water and energy in heat-integrated water allocation networks. AIChE J. 61, 2202–2214, http://dx.doi.org/10.1002/aic.14823.
Manan, Z.A., Tea, S.Y., Alwi, S.R.W., 2009. A new technique for simultaneous water and energy minimisation in process plant. Chem. Eng. Res. Des. 87, 1509–1519, http://dx.doi.org/10.1016/j.cherd.2009.04.013.
Mavrotas, G., 2009. Effective implementation of the ε-constraint method in multi-objective mathematical programming problems. Appl. Math. Comput. 213, 455–465, http://dx.doi.org/10.1016/j.amc.2009.03.037.
Mavrotas, G., 2007. Generation of efficient solutions in multiobjective mathematical programming problems using GAMS, effective implementation of the ε-constraint method.
Morar, M., Agachi, P.S., 2010. Review: important contributions in development and improvement of the heat integration techniques. Comput. Chem. Eng. 34, 1171–1179, http://dx.doi.org/10.1016/j.compchemeng.2010.02.038.
NPTEL, n.d. Crude distillation [WWW Document]. URL ⟨http://www.nptel.ac.in/courses/103102022/6⟩ (accessed 11.17.15).
Oil and Gas Journal, 1995. JAPANESE REFINER SOLVES PROBLEMS IN RESID DESULFURIZATION UNIT [WWW Document]. URL ⟨http://www.ogj.com/articles/print/volume-93/issue-46/in-this-issue/refining/japanese-refiner-solves-problems-in-resid-desulfurization-unit.html⟩ (accessed 11.17.15).
Poplewski, G., Jeżowski, J.M., Jeżowska, A., 2011. Water network design with stochastic optimization approach. Chem. Eng. Res. Des. 89, 2085–2101, http://dx.doi.org/10.1016/j.cherd.2010.12.016.
Ren, L., Zhang, Y., Wang, Y., Sun, Z., 2007. Comparative Analysis of a NovelM-TOPSISMethod and TOPSIS. Appl. Math. Res. Express 2007, 10, http://dx.doi.org/10.1093/amrx/abm005.
Savelski, M.J., Bagajewicz, M.J., 2000. On the optimality conditions of water utilization systems in process plants with single contaminants. Chem. Eng. Sci. 55, 5035–5048, http://dx.doi.org/10.1016/S0009-2509(00)00127-5.
Savulescu, L., Kim, J.-K., Smith, R., 2005. Studies on simultaneous energy and water minimisation—Part II: systems with maximum re-use of water. Chem. Eng. Sci. 60, 3291–3308, http://dx.doi.org/10.1016/j.ces.2004.12.036.
SBC Energy Institute, 2014. Introduction to the Water and Energy Challenge [WWW Document]. URL ⟨http://www.sbc.slb.com/SBCInstitute/Publications/Water.aspx⟩ (accessed 11.16.15).
Short, M., Isafiade, A.J., Fraser, D.M., Kravanja, Z., 2016. Synthesis of heat exchanger networks using mathematical programming and heuristics in a two-step optimisation procedure with detailed exchanger design. Chem. Eng. Sci. 144, 372–385, http://dx.doi.org/10.1016/j.ces.2016.01.045.
Takama, N., Kuriyama, T., Shiroko, K., Umeda, T., 1980. Optimal water allocation in a petroleum refinery. Comput. Chem. Eng. 4, 251–258, http://dx.doi.org/10.1016/0098-1354(80)85005-8.
Tsai, M.-J., Chang, C.-T., 2001. Water usage and treatment network design using genetic algorithms. Ind. Eng. Chem. Res. 40, 4874–4888, http://dx.doi.org/10.1021/ie010011g.
Tudor, R., Lavric, V., 2011. Dual-objective optimization of integrated water/wastewater networks. Comput. Chem. Eng. 35, 2853–2866, http://dx.doi.org/10.1016/j.compchemeng.2011.04.010.
Wang, Y.P., Smith, R., 1994. Wastewater minimisation. Chem. Eng. Sci. 49, 981–1006, http://dx.doi.org/10.1016/0009-2509(94)80006-5.
Wauquier, J.-P., 1998. Raffinage du pétrole (Le). Tome 2. Procédés de séparation, 1st ed. Editions Technip, Paris, France.
Yan, F., Wu, H., Li, W., Zhang, J., 2016a. Simultaneous optimization of heat-integrated water networks by a nonlinear program. Chem. Eng. Sci. 140, 76–89, http://dx.doi.org/10.1016/j.ces.2015.09.036.
Yan, F., Wu, H., Li, W., Zhang, J., 2016b. Simultaneous optimization of heat-integrated water networks by a nonlinear program. Chem. Eng. Sci. 140, 76–89, http://dx.doi.org/10.1016/j.ces.2015.09.036.
Yang, L., Salcedo-Diaz, R., Grossmann, I.E., 2014. Water network optimization with wastewater regeneration models. Ind. Eng. Chem. Res. 53, 17680–17695, http://dx.doi.org/10.1021/ie500978h.
Yee, T.F., Grossmann, I.E., 1990. Simultaneous optimization models for heat integration—II. Heat exchanger network synthesis. Comput. Chem. Eng. 14, 1165–1184, http://dx.doi.org/10.1016/0098-1354(90)85010-8.
Yee, T.F., Grossmann, I.E., Kravanja, Z., 1990a. Simultaneous optimization models for heat integration—I. Area and energy targeting and modeling of multi-stream exchangers. Comput. Chem. Eng. 14, 1151–1164, http://dx.doi.org/10.1016/0098-1354(90)85009-Y.
Yee, T.F., Grossmann, I.E., Kravanja, Z., 1990b. Simultaneous optimization models for heat integration—III. Process and heat exchanger network optimization. Comput. Chem. Eng. 14, 1185–1200, http://dx.doi.org/10.1016/0098-1354(90)80001-R.
Zhou, L., Liao, Z., Wang, J., Jiang, B., Yang, Y., Yu, H., 2015. Simultaneous optimization of heat-integrated water allocation networks using the mathematical model with equilibrium constraints strategy. Ind. Eng. Chem. Res. 54, 3355–3366, http://dx.doi.org/10.1021/ie501960e.