HAL
open science

Definition of a Robustness Indicator for Assessment of Heat Exchanger Network Performances

Lucille Payet, Raphaële Théry Hétreux, Gilles Hetreux, Pascal Floquet

To cite this version:

Lucille Payet, Raphaële Théry Hétreux, Gilles Hetreux, Pascal Floquet. Definition of a Robustness Indicator for Assessment of Heat Exchanger Network Performances. Computer Aided Chemical Engineering, 2017, 40, pp.1813-1818. 10.1016/B978-0-444-63965-3.50304-4 . hal-01886952

HAL Id: hal-01886952

https://hal.science/hal-01886952v1

Submitted on 3 Oct 2018

HAL is a multi-disciplinary open access archive for the deposit and dissemination of scientific research documents, whether they are published or not. The documents may come from teaching and research institutions in France or abroad, or from public or private research centers.

L'archive ouverte pluridisciplinaire **HAL**, est destinée au dépôt et à la diffusion de documents scientifiques de niveau recherche, publiés ou non, émanant des établissements d'enseignement et de recherche français ou étrangers, des laboratoires publics ou privés.

Open Archive Toulouse Archive Ouverte

OATAO is an open access repository that collects the work of Toulouse researchers and makes it freely available over the web where possible

This is an author's version published in: http://oatao.univ-toulouse.fr/20898

Official URL: https://doi.org/10.1016/j.cherd.2017.11.036

To cite this version:

Payet, Lucille and Thery Hetreux, Raphaële and Hétreux, Gilles and Bourgeois, Florent and Floquet, Pascal *Flexibility Assessment of Heat Exchanger Networks: From a Thorough Data Extraction to Robustness Evaluation.* (2018) Chemical Engineering Research and Design, 131. 571-583. ISSN 0263-8762

Any correspondence concerning this service should be sent to the repository administrator: tech-oatao@listes-diff.inp-toulouse.fr

Definition of a Robustness Indicator for Assessment of Heat Exchanger Network Performances

Lucille Payet[a], Raphaele Théry-Hétreux[a], Gilles Hétreux[a], Pascal Floquet[a]

[a]*Laboratoire de Génie Chimique, Université de Toulouse, CNRS, INPT, UPS, 4 allée Emile Monso, 31030 Toulouse, France*

lucille.payet@ensiacet.fr

Abstract

Due to process variabilities and operational modifications, operation parameters of the HEN may alter its output temperatures. Flexibility of HEN refers to the ability of a system to operate for a finite number of points. The first level of flexibility concerns the robustness (ability of the system to absorb disturbances without changing utility flowrates). Assuming that some parameters p vary with a normal distribution characterized by its mean value p_{mean} and standard deviation p_{sd}, a linear system is solved where the left-hand term involves matrices representing the HEN (fluctuations of the HEN characteristics, except topology) and right-hand side involves fluctuations of input temperatures of the HEN. Due to this linear formulation, the normally distributed inputs also propagate along a normal distribution output temperatures. A robustness criterion is then defined evaluating the probability of a selected critical value output distribution to fall within a predefined interval. This robustness criterion can only be significant when a thorough data analysis is carried out to identify the relevant perturbations and their frequency of occurrence.

Keywords: Heat Exchanger Network; Flexibility; Robustness; Heat integration; Mixed Integer Linear Programming.

1. Introduction

Currently, the energy issue is one of the most concerning topic in the industry. To enhance industrial processes energy efficiency, heat integration is one of the major leverage to find short-term solutions. However, most of the solutions provided by heat integration do not consider on-site constraints such as the operability of integrated heat exchanger networks (HEN). To assess the operability of a potential HEN, the definition of a reliable flexibility criterion is necessary. We define the flexibility as the capacity of a system to operate for a finite number of operating points and can be divided into 4 topics:

- *Robustness*: ability to absorb disturbances ("noises" with low amplitude) without changing the flow rates of utilities.
- *Resilience*: ability to absorb large disturbances by acting upon utility flow rates or network topology.
- *Adaptability*: ability to operate over several operating points (production campaigns, seasons influence on process temperatures…)
- *Management of intermittency in processes*: ability to manage temporal mismatch between hot and cold sources mainly in batch processes through storage means.

The first step towards HEN flexibility, concerning a robustness criterion, is developed in this paper.

2. Robustness in HEN

An integrated system is inherently less operable and less able to comply with disturbances than a process solely relying on utilities. In order to choose a viable integrated HEN, the evaluation of its ability to absorb disturbances that will necessarily occur in the process is a necessity. Since the early 80's, studies were carried out on the flexibility aspect of HEN to solve the operability issue with works such as Saboo et al. (1985) and Swaney and Grossmann (1985) that use non-linear programming (NLP) to optimize flexible HEN. Recently, Escobar et al. (2014) introduced an approach for the synthesis of multi-period HEN also using NLP formulation. They pointed out that the recurrent issue is computational time due to problem complexity. A mean to reduce computational time can be through linear programming (LP). Linear programming is much more efficient in computational time and enable large-scale problem analysis. By post-evaluating several HEN alternatives and estimating their robustness towards on-site disturbances, a linear formulation was established.

Using linear programming, Floquet et al. (2016) introduced a methodology based on interval arithmetic (IA) concepts for modelling impacts of process parameters fluctuations on the behaviour of the HEN. Assuming that some parameters *p* can vary on an interval *[pmin, pmax],* a linear system can be solved where the left term involves interval matrices (fluctuations of the HEN characteristics, except topology) and right hand side involves fluctuations of input temperature of the HEN. IA then propagates fluctuations to HEN temperatures as solution of the interval linear system (ILS). However, the simulation results showed some limits: first the complexity of the analysis of the results increases with the possible combination of the disturbances, then in this approach, all the input perturbations have the same probability to occur simultaneously (uniform distribution).

This paper addresses these two limitations by assuming a normal distribution for the input and (consequently) the output temperatures of the Heat Exchanger Network.

3. Methodology

Figure 1 illustrates the global methodology implemented to assess the robustness of a given Heat Exchanger Network. Three steps are required: Statistical Analysis – HEN simulation and HEN response analysis. The following sections describe each of these steps.

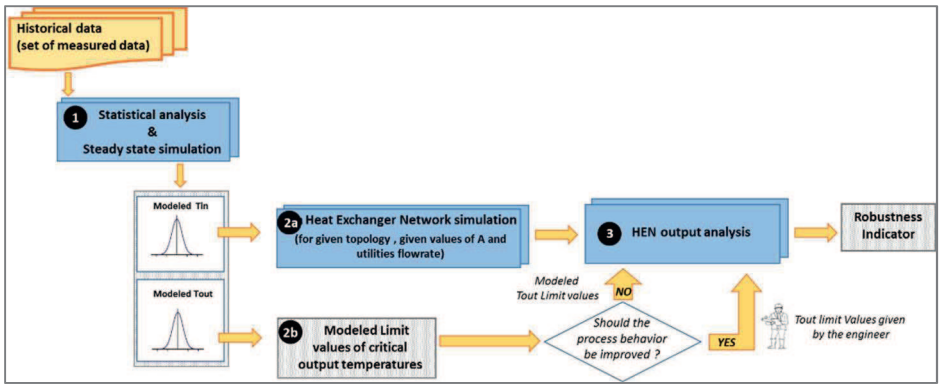

Figure 1: Methodology to establish a HEN robustness indicator

3.1. Step 1: Statistical analysis and steady state simulation

To establish a robustness indicator, the industrial site historical data are required. The raw sensors data are then analyzed to extract a consistent dataset representative of the process steady-state operating mode. A few variations and their frequencies of occurrence can be isolated as recurrent perturbations from on-site data. Besides, the missing data are deduced from a process simulation model such as ProSimPlus®. Their standard deviation and occurrence rate are estimated from a consequent number of simulations. The quantity of historical data is crucial as it determines the quality of the robustness study.
Critical output temperatures and their limit values are also identified (step 2b). They can be assigned by the operational staff if the nominal behavior is unsatisfying and the limits taken for the study should be stricter.

3.2. Step 2a: HEN simulation in presence of Gaussian disturbances

A perturbation is considered as a Gaussian distribution of temperature around a nominal temperature. A perturbation is then characterized by its mean value and a standard deviation. The HEN model used is the same as presented in Floquet et al. (2016). In the latter article, it is established that the basic model to evaluate output temperatures from input temperatures for an isolated counter-current heat exchanger is a linear expression displayed in Eq. (1).

$$\begin{pmatrix} T_{out}^{h} \\ T_{out}^{c} \end{pmatrix} = \begin{pmatrix} K_2 & 1-K_2 \\ 1-K_1 & K_1 \end{pmatrix} \begin{pmatrix} T_{in}^{h} \\ T_{in}^{c} \end{pmatrix} \tag{1}$$

where K_1 and K_2 depend only on exchanger characteristics (U, A, F^c, Cp^c, F^h, Cp^h). Then, for the entire HEN, the output temperature defined by a vector T will be obtained through the resolution of the linear system $AT = b$ where:

- T is a vector of all the temperatures of the system. A system of n number of heat exchangers is displayed in Eq. (2).
- b has all the input (known data) temperatures of the system, where the disturbances will occur , and 0 otherwise.
- The matrix A assembles equations concerning input temperatures, input-output temperatures of a heat exchanger, network connections as shown in Eq. (3).

$$\mathrm{T} = \begin{pmatrix} \mathrm{Th_{in}}(1) \\ \mathrm{Tc_{in}}(1) \\ \mathrm{Th_{out}}(1) \\ \mathrm{Tc_{out}}(1) \\ \vdots \\ \mathrm{Th_{in}}(\mathrm{n}) \\ \mathrm{Tc_{in}}(\mathrm{n}) \\ \mathrm{Th_{out}}(\mathrm{n}) \\ \mathrm{Tc_{out}}(\mathrm{n}) \end{pmatrix} \begin{matrix} \mathrm{HEx\ 1} \\ \vdots \\ \mathrm{HEx\ n} \end{matrix} \tag{2}$$

$$A = \begin{pmatrix} 1 & 0 & 0 & 0 & \dots & 0 & 0 & 0 & 0 \\ 0 & 1 & 0 & 0 & \dots & 0 & 0 & 0 & 0 \\ -K_2^{E_1} & K_2^{E_1}-1 & 1 & 0 & \dots & 0 & 0 & 0 & 0 \\ K_1^{E_1}-1 & -K_1^{E_1} & 0 & 1 & \dots & 0 & 0 & 0 & 0 \\ \dots & \dots & \dots & \dots & \dots & \dots & \dots & \dots & \dots \\ 0 & 0 & -1 & 0 & \dots & 1 & 0 & 0 & 0 \\ 0 & 0 & 0 & 0 & \dots & 0 & 1 & 0 & 0 \\ 0 & 0 & 0 & 0 & \dots & -K_2^{E_n} & K_2^{E_n}-1 & 1 & 0 \\ 0 & 0 & 0 & 0 & \dots & K_1^{E_n}-1 & -K_1^{E_n} & 0 & 1 \end{pmatrix} \tag{3}$$

The linearity of the problem enables to ascertain that the response of the system to a Gaussian perturbation is also a Gaussian. Here we assumed that all the Gaussian input temperatures are independent. The properties of the response is deduced by solving

$A.T_{mean} = b_{mean}$. The variance can also be linearly deduced by calculating the variance of each elements. In this study, perturbations are only applied on input temperatures.

3.3. Step3: HEN output analysis

Finally, the analysis of the process behavior subject to temperature variations enables us to establish the robustness indicator of several HEN for the same process.

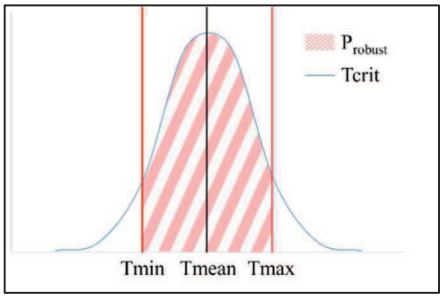

The robustness indicator is the probability of the critical temperature response to fall within the temperature interval [Tmin;Tmax] as displayed in Figure 2. As explained formerly, Tmin and Tmax can be given by the industrial or set to be the same as the current response of the nominal HEN.

Figure 2: Robustness Indicator P_{robust}

4. Applications

4.1. Example description

The example presented in this paper is a simple example composed of 2 hot streams and 2 cold streams. Streams properties and pinch results are displayed respectively in Table 1 and Table 2. In Table 2, ΔTmin is the minimum temperature difference, Tpinch is the Pinch temperature of the system for ΔTmin, QUCmin is the minimum cold utility heat load, QUHmin is the minimum hot utility heat load and MER is the Minimum Energy Requirements.

Table 1: Properties of the case study

Conditions	Stream name	FCp (kW/K)	Tin (°C)	Tout (°C)	Q (kW)
Hot	H1	2	180	40	280
Hot	H2	4	150	40	440
Cold	C1	3	60	180	180
Cold	C2	2.6	30	130	130

Table 2: Pinch analysis of the case study

ΔTmin	Tpinch	QUCmin	QUHmin	MER
10 °C	145°C	160 kW	60 kW	220 kW

To reduce the energy consumption of the system, two configurations of HEN, that were obtained through the solving of a MILP HEN synthesis model, are studied. Main features of both configurations are displayed in Table 3. On this table, the Energy Improvement Coefficient (EIC) is an indicator between 0 and 1 that measures the distance from the energy consumption of the considered solution to the Minimum Energy Requirements (MER) (see Eq. (4)). A high value of the EIC traduces a HEN that maximises the energy recovery. If the HEN energy consumption is equal to the MER, its EIC is equal to 1.

$$EIC = 1 - \frac{Eff - MER}{Max - MER} \quad (4)$$

where *Eff* stands for the effective energy consumption of the studied HEN and *Max* is the maximum consumption equal to the nominal consumption in case of retrofit or the maximum consumption in case of grass root synthesis.
The first one (see Figure 3 3a) enables to reach the MER target but is composed of 8 heat exchangers whereas the second one (see Figure 3 3b) only requires 5 heat exchangers to obtain an EIC equal to 88%.

Table 3: Energy performances of the 2 HEN

Configuration	QUC	QUH	Number of heat exchangers	EIC
01	160 kW	60 kW	8	1
02	200 kW	100 kW	5	0.88

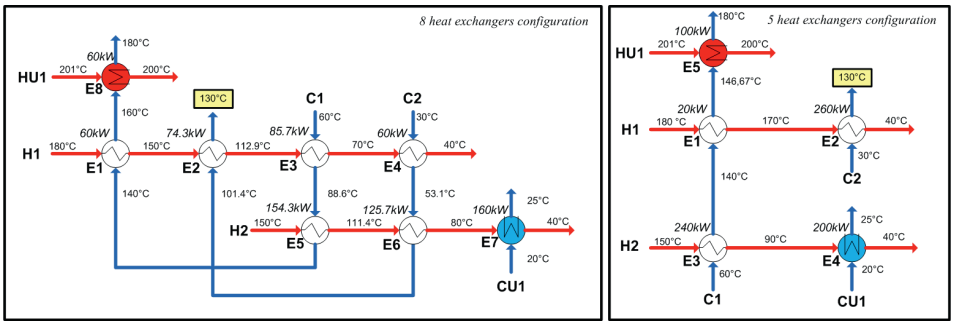

Figure 3: HEN representation: 3a Config. 01 (MER) 3b. Config. 02 (EIC = 0.88)

4.2. Case study presentation

For this example, step 1 consisting of the statistical analysis of historical data, it is assumed that a consistent data analysis has been performed previously. Two series of data corresponding to scenarii 1 and 2, respectively, are then used for the HEN simulation step (Table 4 and 5). In scenario 1, H2 and C1 input temperature are supposed to follow a normal distribution with a mean value equal to the nominal value and a standard deviation equal to 10% of the mean value whereas in scenario 2, H1 and C1 are submitted to the same perturbations. For both scenario C2 is considered as the critical process stream; C2 output temperature must not exceed ±5% of the nominal value. Given these data, the response of each configuration is studied. The robustness indicator, which is the probability of the critical temperature to stay inside the temperatures interval [Tmin; Tmax], is then evaluated.

Table 4: Critical stream characteristics

Critical stream	Tmin	Tmean	Tmax
C2	123.5 °C	130°C	136.5 °C

Table 5: Perturbed streams characteristics

Scenario	Input stream perturbed	Tmean	Tsd
01	H2	150°C	15°C
	C1	60°C	6°C
02	H1	180°C	18°C
	C1	60°C	6°C

4.3. Results

The results are presented in Table 6. Considering scenario 1, configuration 02 is more robust than the configuration 01. This first result is not surprising as MER configurations, which consist in numerous integration heat exchangers, are usually considered as less operable solutions. However, thanks to this analysis, we can identify a counter example. Scenario 2 reveals a case where the configuration 01 is more robust than the configuration 02. This result is quite impossible to predict through the single analysis of the HEN topology. A quantitative analysis is then essential.

Table 6: Results of the simulation for scenario 2

	P_{robust}	
Perturbation	**Config 01 (MER)**	**Config 02 (EIC = 0.88)**
Sc. 1: H2 + C1	0.541	0.994
Sc. 2: H1 + C1	0.960	0.499

5. Conclusion

A robustness criterion was defined by calculating the probability of the selected critical value output distribution to be inside predefined limits. This robustness criterion is all the more significant when a thorough data analysis is carried out. This first step is crucial to identify the correct perturbations and their frequency of occurrence. For instance, if the perturbed streams are C1 and H1 instead of C1 and H2, the tendencies are completely reversed. The frequency of occurrence will be weighted on the robustness coefficient to obtain a single robustness indicator. A HEN robust towards the industrial site specifications can be selected.
Another alternative to provide robust HEN is the resilience criterion which determines the capacity of a non-robust HEN to become robust through minor network modifications.

Acknowledgements

This work is part of the RREFlex project whose general goal is the development of software dedicated to the synthesis of flexible Heat Exchanger Networks (HEN) based on an iterative method combining MILP formulations and pre/post-processing calculation modules. The LGC greatly acknowledge TOTAL and the ADEME for the financial support of this project.

References

M. Escobar, J. O. Trierweiler, I. E. Grossmann, 2014, A heuristic Lagrangean approach for the synthesis of multiperiod heat exchanger networks, Applied Thermal Engineering 63, 177-191

P. Floquet, G. Hétreux, R. Théry-Hétreux, L. Payet, 2016, Analysis of Operational HEN Flexibility via Interval Arithmetic, Computer Aided Process Engineering, 1401-1406

A. K. Saboo, M. Morari, D. C. Woodcock, 1985, Design of resilient processing plants-VIII. A resilience index fer heat exchanger networks, Chem. Eng. 7, 695-706

R. E. Swaney, I. E. Grossmann, 1985, An index for operational flexibility in chemical process design. Part. I. Formulation and theory, AICHE J. 31