HAL
open science

Modeling and simulation of Power Electronic based Electrotechnical Systems for Renewable Energy, Transportation and Industrial Applications: A Brief Review

Seyed Masoud Mohseni-Bonab, Innocent Kamwa

To cite this version:

Seyed Masoud Mohseni-Bonab, Innocent Kamwa. Modeling and simulation of Power Electronic based Electrotechnical Systems for Renewable Energy, Transportation and Industrial Applications: A Brief Review. 2019. hal-01730123v2

HAL Id: hal-01730123

https://hal.science/hal-01730123v2

Preprint submitted on 11 Apr 2019 (v2), last revised 9 May 2019 (v3)

HAL is a multi-disciplinary open access archive for the deposit and dissemination of scientific research documents, whether they are published or not. The documents may come from teaching and research institutions in France or abroad, or from public or private research centers.

L'archive ouverte pluridisciplinaire **HAL**, est destinée au dépôt et à la diffusion de documents scientifiques de niveau recherche, publiés ou non, émanant des établissements d'enseignement et de recherche français ou étrangers, des laboratoires publics ou privés.

Rubrique Arima en pratique

Modélisation et simulation de systèmes électrotechniques pour l'énergie renouvelable, le transport et les applications industrielles: Une brève revue

Modeling and simulation of Power Electronic based Electrotechnical Systems for Renewable Energy, Transportation and Industrial Applications: A Brief Review

Seyed Masoud Mohseni-Bonab[1], Innocent Kamwa[2,*]

[1] Department of Electrical Engineering, Laval University,Quebec, G1V0A6, CA.

[2] Power System and Mathematics Département, Hydro-Québec/IREQ, Varennes QCJ3X1S1, CA.

s.m.mohsenibonab@ieee.org, [*] kamwa.innocent@ireq.ca (corresponding author)

RÉSUMÉ. Dans cet article, une revue complète des recherches récentes sur les systèmes électrotechniques basés sur les convertisseurs de puissance modernes (ETS) est réalisée. En particulier, les ETS basés sur l'électronique de puissance (PE) sont étudiés. La revue de la littérature consiste en une classification standard des ETS basés sur les PE, ainsi qu'une étude sur des forces et les faiblesses de ces dispositifs sur les sources d'énergie renouvelables.

ABSTRACT. In this paper, a completed review of recent researches about modern power converter based electrotechnical systems (ETSs) has been carried out. In particular, power electronics (PEs) based ETSs have been investigated. The literature review consists of a standard classification of PEs-based ETSs, along with a survey on strengths and weaknesses of these devices impact on renewable energy sources.

MOTS-CLÉS : Systèmes électrotechniques, l'électronique de puissance, sources d'énergie renouvelables, systèmes de stockage d'énergie.

KEYWORDS: Electrotechnical systems (ETSs), power electronics (PEs), renewable energy sources (RESs), energy storage systems (ESSs).

Acronyms

ETSs	Electrotechnical systems
PEs	Power electronics
RESs	Renewable energy sources
ESSs	Energy storage systems
DGs	Distributed generation
SGs	Smart Grids
FACTS	Flexible AC Transmission System
HVDC	High-voltage direct current
CHP	Combined heat and power
WG	Wind generation
DFIG	Doubly fed induction generators
PMSG	Permanent magnet synchronous generators
MPPT	Maximum power point tracking
OPF	Optimal power flow
SOC	State of charge
TNA	Transient network analyzer
ATL	Artificial transmission line
EMTP	Electromagnetic transients program
DTS	Dispatcher training simulator
HIL	Hardware-in-the-loop
SSSC	Static synchronous series compensator
TCSC	Thyristor controlled series capacitor
SVC	Static VAR compensator
STATCOM	Static synchronous compensator
UPFC	Unified power flow controller
IPFC	Interline power flow controller

1. Introdcution

Electrotechnical systems (ETSs) plays an important role in our lives and have a wide range of usage. In this paper, in particular those which are related to modern power electronics (PEs) have been investigated.

This paper is categorized as follows: In section 2 the fundamentals of PE devices are described. Section 3 reviewed the distributed generation and Smart Grid technologies. FACTS devices and HVDC grids are reviewed in section 4 and 5, respectively. Topics related to renewable energies, such as, wind, PV and ESSs are reviewed in section 6. In section 7, SPS and EMTP-RV environments are presented as the best tools for dealing with PEs-based ETSs. Finally, the section 8 concludes the paper. Figure 1 shown the flowchart of this review paper.

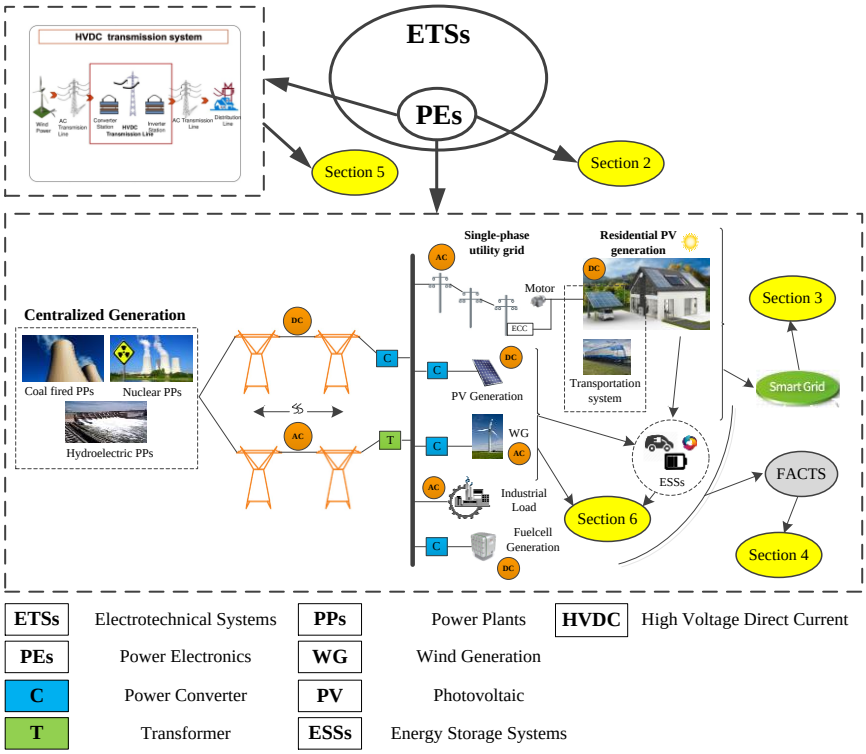

Figure 1. Summary of power electronics based electrotechnical systems components according to paper organization

2. An overview of fundamentals of power electronics

Recently with the growth of emerging new technologies in renewable energy systems, the technology of PEs is more important because of many renewable resources are intermittent and without PEs, voltage, frequency, and power output characteristics could not be regulated. The modern distributed structure of a power grid is shown in Figure 2.

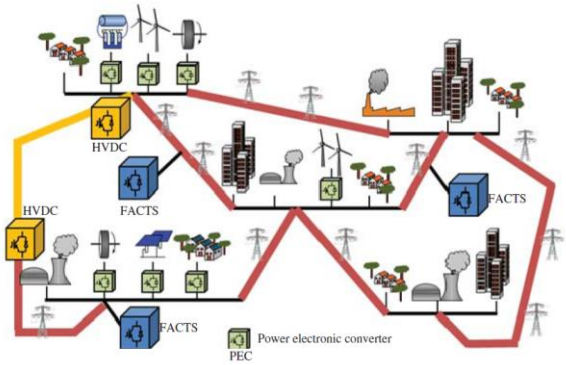

Figure 2. Modern scenario of the electrical grid

Table 1. Classification of renewable energy sources

Renewable energy systems	Housing Applications		Solar Energy		Marine/Fluvial energy			Wind Energy	Geothermal Energy
	Proof PV	Solar thermal roof	PV Plants	Solar Thermal	Wave Energy	Tidal Energy	Hydroelectric		
Maximum nominal power	50 KW		250 MW	370 MW	150 Kw	256 MW	14 GW	6 MW per Tur.	720 MW
Usual converter topologies	DC/AC AC/DC	×	DC/DC DC/AC	×	AC/DC, DC/DC, DC/AC		×	Back-to-Back	×
Typical power semiconductors	Mosfet	×	IGBT IGCT	×	IGBT, IGCT		×	IGBT IGCT	×
Availability	Solar irradiance dependence				Random	Intermittent	Seasonal	Random	Constant
Technology trend	Power density efficiency		Nominal power efficiency		Robustness Under storms		×	Gearless, Offshore, Power	Development cost

Modern distribution systems encounter new challenges due to high penetration of renewable energy sources (RESs) which are naturally stochastic. Different PEs devices such as, DC–AC inverters, AC–DC rectifiers, and DC–DC converters are dependent to the renewable energies. A new classification of RESs is given in Table 1. This classifcaiton is based on their nominal power, the usual power converters and corresponding power semiconductors required for the grid integration (if necessary), the availability of the renewable energy source and the corresponding technology trend.

3. An Overview of Distributed Generation and Smart Grid Concepts and Technologies

Microgrids (MGs) is a promising concept to meet the challenges of integrating various distributed generators (DGs) and energy storage systems (ESSs) into the electricity network [1]. Besides, the smart grids (SGs) is conceived as an electric grid able to deliver electricity in a controlled and smart way to consumers [2].

Based on recent articles in this area [3, 4], the main advantages of smart grids can be increasing the reliability and efficiency of the power systems.

The supporting idea of the formation of MGs and SGs is that a paradigm consisting of multiple DG units and aggregated loads are far more reliable, economical and practical than a single DG unit serving a single load [5]. The implementation of the SGs and MGs concepts can bring multiple benefits to both of the consumers and distribution utilities. Examples of such benefits include:

- Reliability increase: the capability of the SGs and MGs to operate independently from the main grid allows the MG to feed its loads autonomously when the main grid is not available and thus avoid possible load interruptions [6-8].
- Grid support: by clustering loads and DG units and treating each of these clusters as a relatively independent power unit, SGs and MGs can be used to supply electrical services to the main grid especially at the times of grid peak demand [9, 10].
- Local community support: with the increasing efficiencies of the DG units, MGs can support local and developing communities' economies by creating jobs within such communities to generate the required electricity instead of importing it from the main grid. The implementation of SGs and MGs can also expedite the development of such communities instead of waiting for the power companies to build centralized power plants that are costly and take much longer to get online [11].

- Reducing the carbon footprint: the SGs and MGs can reduce the environmental impacts associated with the construction of large power plants to cope with the electrical load growth by allowing more dependence on small efficient DG units. Moreover, SGs and MGs can largely facilitate the implementation of the combined heat and power (CHP) plants [12].
- As mentioned above, SGs and MGs can operate in both grid-connected and islanded modes. In the islanded mode, the key questions are how to ensure the supply–demand balance within the microgrid and how to achieve this in the most cost-effective way. Wind and solar power are among the most promising renewable power supply alternatives due to their abundance, cleanness, and free primary energy source. However, the intermittency of wind and solar power supply poses new challenges to the operation and control of autonomous MGs, especially under high penetration levels [1]. The popular maximum power point tracking (MPPT) algorithms emphasize high energy usage efficiency but may cause a supply–demand imbalance when the available renewable generation is not equal to the total load demands, especially for autonomous MGs [13]. Furthermore, it should be noted that in modern grids, power management and stability assurance are critical tasks because of the variables involved in generation and on the demand side. There are many different methods to approach these problems However, the absorption and injection of energy by energy storage systems (ESSs) may be the best solution for managing this issue well [14].

4. FACTS Devices

There are a variety types of the FACTS devices implements as shown in Figure 3. These tools are either series or parallel, or a combination of two in the circuit, which has the capabilities of: increasing the transmission capacity, improving the dynamic and permanent stability, improving the oscillation and improving the stability of the voltage [15].

With the rapid development of power electronic technologies, utilizing Flexible AC Transmission System (FACTS) for performance improvement of existing transmission systems has been made economic and practical. FACTS devices enhance the controllability of the transmission lines and increase their power transfer capability [16, 17].

In recent years, there has been an increasing trend in the development and use of FACTS controllers in power transmission systems. The power electronics-based FACTS

devices provide more flexibility to AC power systems. Flexibility is interpreted as the capability of a system to respond quickly to the control input and to change in its operating point [18].

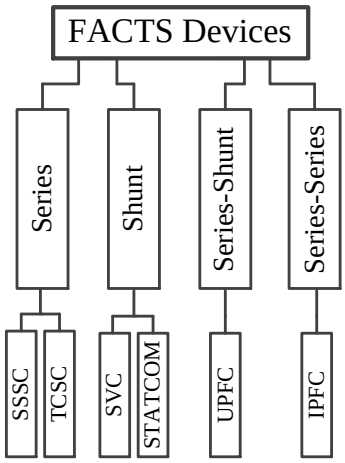

Figure 3. Overview of FACTS devices

5. HVDC Transmission Systems

AC transmission lines are the most popular and most commonly used lines in power grids, but nowadays, due to several following reasons, HVDC transmission systems have become very popular in certain applications [19]:

- In HVAC lines, when the length of the lines are increased, the power transmission capability is reduced, but with utilizing HVDC systems, the amount of transferred power would be the constant value.
- Directly connecting two AC systems with different fundamental frequencies.
- From economic costs point of view, there is a critical distance beyond which the investment cost for building new HVDC transmission lines is less than that for its AC counterpart.
- From environmental aspects point of view, such as lower visual impact and space requirements [20], HVDC transmission lines are better.

HVDC installations include several devices. Among them, one of the most important is the power electronic converter. As for FACTS devices, the power semiconductor technology used for building the power converter can be thyristor-controlled or gate-controlled power switches [21].

Depending on the rated power range of the transmission line, different HVDC technologies can be chosen. In addition, the application and location of the transmission system define the most suitable configuration of the HVDC system. Different valid configurations can be described for systems built with CSC-HVDC (Figure 4 (a)) or VSC-HVDC (Figure 4 (b)) technologies [20, 21]. These two types and also a simplest configuration (back-to-back system), is presented in Figure 4 (c).

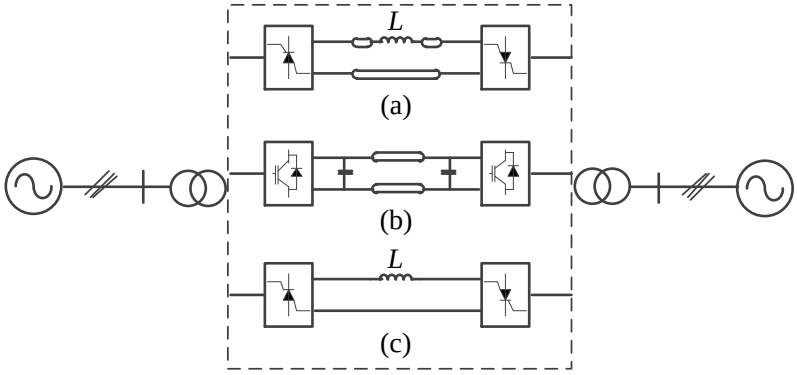

Figure 4. HVDC technologies: (a) CSC-HVDC, (b) VSC-HVDC and (c) back-to-back configurations

6. Renewable Energy Technlogies

6.1. Wind Energy

The existing wind farms are usually employing variable speed turbine technology. In this context, doubly fed induction generators (DFIGs) and permanent magnet synchronous generators (PMSG) are attractive choices [22]. These machines are able to exchange reactive power with the AC network they connected. In [23], a detailed model of capability curve for DFIG is developed. This model is utilized in [24] and [25] to incorporate wind farms in the OPF problem. Also, PMSG is basically synchronous generators and the corresponding capability curve is well known.

6.2. PV

The continuously decreasing price of PV modules and the strong support of governments in pushing this technology have led to the consideration of PV and solar thermal energy as important factors in the present and future renewable energy market. One important part of these installations is based on housing applications (<5 kW), but as part of the great evolution of the PV sector in recent years, larger PV power plants are steadily being constructed, which currently achieve a nominal power up to 250MW (Agua Caliente Solar Project in the United States). Today, the main installed PV capacity is grid-connected with the off-grid sector accounting for an estimated 2% of global capacity [19].

Since, the output of PV panels is a DC voltage, and the existence of a power converter is required to generate an output AC voltage, ETSs impacts on PV panels is really important.

6.3. Energy Storage Systems

Energy storage is the capture of energy produced at one time for use at a later time. Energy comes in multiple forms including radiation, chemical, gravitational potential, electrical potential, electricity, elevated temperature, latent heat and kinetic. ESSs involve converting energy from forms that are difficult to store to more conveniently or economically storable forms. Some technologies provide short-term energy storage, while others can endure for much longer. In the following the energy storage technologies are included. Investigations of the challenges and barriers to power systems indicate that ESSs should aim at the following three targets [26, 27]:

- Enhancing the reliability of renewable energy sources (RESs);
- Improving the resilience of the grid and resolving its issues;
- Realizing the benefits of smart grids and optimizing generation to suit demand;
- By storing energy when it is easily available and dispatching it during shortages, the combination of energy storage technology and RESs can help to stabilize power output while also enhancing the reliability of RESs. Moreover, ESSs can increase the resilience of systems during weather variations, natural disasters, and so on.

Indeed, in implementing an optimum storage project, three different steps are needed to be considered [28]:

- Investigating the type and size of the storage system and selecting the one that is best for the system.
- Defining the best control strategy for the application considering the selected storage system.
- Investigating the net present value of the storage system.

Besides, to store the generated power, it is necessary to convert it into other forms of energy, such as chemical or mechanical energy. Energy storage consists of three different steps [29]:

- Charge: absorbing electrical energy from sources
- Storage: converting electrical energy to other types of energy and storing it
- Discharge: injecting the stored electrical energy back into the system

6.3.1. Batteries

The battery stores energy in an electrochemical form and is the most widely used device for energy storage in a variety of applications. There are different kinds of batteries with different chemicals. The idea behind them is that the two different chemicals within a battery cell have different loads and are connected with a negative (cathode) and the other with a positive electrode (anode). When connected to an appliance the negative electrode supplies a current of electrons that flow through the appliance and are accepted by the positive electrode. There are two basic types of electrochemical batteries [30]:

1) **Primary Battery**: converts chemical energy into electric energy. The electrochemical reaction in a primary battery is nonreversible, and the battery is

discarded after a full discharge. For this reason, it finds applications where a high energy density for one-time use is required.

2) **Secondary Battery**: also known as the rechargeable battery. The electrochemical reaction in the secondary battery is reversible. After a discharge, it can be recharged by injecting a direct current from an external source. This type of battery converts chemical energy into electric energy in the discharge mode. In the charge mode, it converts the electric energy into chemical energy. In both modes, a small fraction of energy is converted into heat, which is dissipated to the surrounding medium. The round-trip conversion efficiency is between 70 and 80%.

For the use of storing energy produced by renewable energy sources only rechargeable batteries are relevant and will be considered.

There are at least six major rechargeable batteries available today. They are as follows:

- Lead-acid (Pb-acid)
- Nickel-cadmium (NiCd)
- Nickel-metal hydride (NiMH)
- Lithium-ion (Li-ion)
- Lithium-polymer (Li-poly)
- Zinc-air

The battery's latest maximum capacity, denoted by Q_m, is measured in ampere-hours (Ah), meaning it can deliver Q_m A for one hour or Q_m / n A for n hours. The product of the voltage and ampere-hour forms the watt-hour (Wh) which is the energy rating that the battery can deliver to a load from the fully charged condition.

The battery charge and discharge rates are stated in units of its capacity in Ah. For instance, charging a 100-Ah battery at $Q_m / 10$ rate means charging at 100/10 = 10 A. Discharging that battery at $Q_m / 2$ rate means drawing 100/2 = 50 A, at which rate the battery will be fully discharged in 2 h. The state of charge (SOC) of the battery at any time is defined as the following: [30]

$$\text{SOC}=\frac{\text{Ah capacity remaning in the battery}}{\text{battery's latest maximum capacity}} \tag{1}$$

The SOC is the ratio between remaining capacity and the full charge, equal to 100% for full charge and 0% for full discharge. The SOC and its relation to capacity (Q_m) is outlined in the following equation [31]:

$$\text{SoC}(\%)=\left(\frac{Q_m-\int \text{i}dt}{Q_m}\right)\times 100 \tag{2}$$

According to the degradation of Q_m, state of health (SOH) is defined as [31]:

$$\text{SOH}(\%)=(\frac{Q_m}{Q_{nom}})\times 100 \tag{3}$$

Where the Q_{nom} is the battery's nominal capacity. A battery's SOH normally ranges within 0–100%, but when it is new, the SOH can be slightly larger than 100% due to product variations. The end of life of a Li-ion battery is commonly defined by the maximum cycles when the SOH drops to 80%. SOH is a key indicator of safe operation because it provides a timely warning that replacement is required.

During battery charging, the energy management software monitors the SOC, the overall health, and safe termination criteria. The continuously monitored operating parameters are the battery voltage, current, and temperature. The charging timer is started after all initial checks are successfully completed. Charging may be suspended (but not reset) if it detects any violation of critical safety criteria. The timer stops charging if the defect persists beyond a certain time limit. Normal charging has the following three phases:

- Bulk (fast) charge, which deposits 80 to 90% of the drained capacity
- Taper charge, in which the charge rate is gradually cut back to top off the remaining capacity
- Trickle (float) charge after the battery is fully charged to counter the self-discharge rate

The bulk-charge and the taper-charge termination criteria are preloaded in the battery management software to match the battery electrochemistry and system design parameters. For example, the NiCd and NiMH batteries are generally charged at a constant current (shown in Figure 5), terminating the charging when the continuously monitored ΔV is detected negative. On the other hand, the Li-ion battery, being sensitive to overcharging, is charged at a constant voltage, tapering off the charge current as needed (Figure 6).

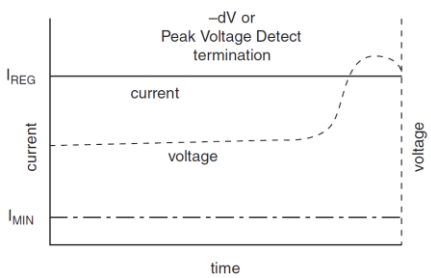

Figure 12: Constant current charging of NiCd and NiMH batteries.

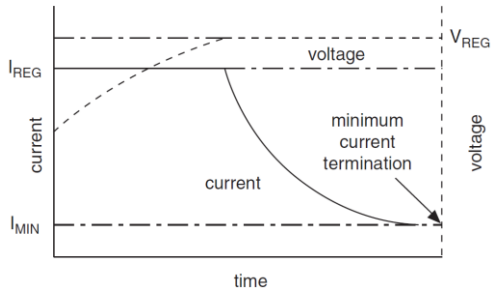

Figure 6: Constant voltage charging of Li-ion battery.

7. EMT simulation tools

Since the development of investigation methods of ETSs is a very important task in power systems operations, scientists and engineers paid more attention to ETSs in their research because of their applications in PEs. It is also a challenge that a lot of elements and devices that form an electrotechnical system have a complex intrinsic structure, and employment of specialized environment for their simulation. Analyzing ETSs generally is categorized in the two following forms:

- Dynamic analysis
- Steady-state analysis

In the area of dynamic analysis, the set of blocks contains the models of the complex systems. PEs-based ETSs can be simulated with different graphical programming languages, according to several publications in this area. Two powerful softwares, which are highly recommended by researchers and scientists are: 1) SimPowerSystems (SPS) [32] and 2) EMTP-RV [33]. SimPowerSystems operates in the Simulink environment.

Real-time power system simulation is becoming a standard technology in designing new devices and analyzing power system dynamics [34, 35]. Simulation of power system dynamics is an old technology in power system engineering. There are different forms for dynamics analysis: transient network analyzer (TNA), artificial transmission line (ATL), analogue simulator, electromagnetic transients program (EMTP), transient stability analysis and long-term dynamic simulation program, dispatcher training simulator (DTS), etc. In addition for real time simulation different environments have been introduced in the papers: RTDS [36], eMEGAsim [37] and HYPERSIM [38] are some of real-time simulators that are reported in the literature.

Hydro-Quebec (HQ), as a pioneer in this field, has extensively used its real-time simulation facilities for testing protection systems, new controllers and various FACTS systems and for optimization of existing controls. The outputs of HQ researches in real-time simulations are really extensive. For instance, in [39, 40] IREQ's power system

simulator features have been introduced. The application of this simulator on hardware-in-the-loop (HIL) testing of HVDC, FACTS controllers and protection systems as well as for the integration of wind generation on Hydro Québec's network are studied in this paper in detail. In addition, in [41], a validation test of IREQ's power system simulator with a relatively large AC-DC interconnected network including generators (turbine, AVR), dynamic loads and a full bipole HVDC transmission system, are performed and different characteristics of this simulator such as simulation time step are discussed. The studied network is simulated on both Hypersim real-time simulator and on the hybrid simulator that is connected with the real external HVDC controls.

8. Conclusion

From the technical comparison it can be concluded that modern power converter based electrotechnical systems (ETSs) applications have grown rapidly in recent years due to their undeniable roles in power systems schematics. In this review paper, the literature review consists of a standard classification of power electronics (PEs)-based ETSs, along with a survey on strengths and weaknesses of these devices impact on renewable energy sources.

Rréfrences

[1] F. Katiraei, R. Iravani, N. Hatziargyriou, and A. Dimeas, "Microgrids management," *IEEE power and energy magazine,* vol. 6, 2008.

[2] P. Siano, "Demand response and smart grids—A survey," *Renewable and sustainable energy reviews,* vol. 30, pp. 461-478, 2014.

[3] V. J. Forte, "Smart grid at national grid," in *Innovative Smart Grid Technologies (ISGT), 2010*, 2010, pp. 1-4.

[4] C. W. Potter, A. Archambault, and K. Westrick, "Building a smarter smart grid through better renewable energy information," in *Power Systems Conference and Exposition, 2009. PSCE'09. IEEE/PES*, 2009, pp. 1-5.

[5] D. G. Photovoltaics and E. Storage, "IEEE Guide for Design, Operation, and Integration of Distributed Resource Island Systems with Electric Power Systems," 2011.

[6] R. H. Lasseter, "Smart distribution: Coupled microgrids," *Proceedings of the IEEE,* vol. 99, pp. 1074-1082, 2011.

[7] I.-S. Bae and J.-O. Kim, "Reliability evaluation of customers in a microgrid," *IEEE Transactions on Power Systems,* vol. 23, pp. 1416-1422, 2008.

[8] K. Moslehi and R. Kumar, "A reliability perspective of the smart grid," *IEEE Transactions on Smart Grid,* vol. 1, pp. 57-64, 2010.

[9] J. Rocabert, A. Luna, F. Blaabjerg, and P. Rodriguez, "Control of power converters in AC microgrids," *IEEE transactions on power electronics,* vol. 27, pp. 4734-4749, 2012.

[10] K. M. Rogers, R. Klump, H. Khurana, A. A. Aquino-Lugo, and T. J. Overbye, "An authenticated control framework for distributed voltage support on the smart grid," *IEEE Transactions on Smart Grid,* vol. 1, pp. 40-47, 2010.

[11] R. Palma-Behnke, L. Reyes, and G. Jimenez-Estevez, "Smart grid solutions for rural areas," in *Power and Energy Society General Meeting, 2012 IEEE*, 2012, pp. 1-6.

[12] A. K. Basu, S. Chowdhury, and S. Chowdhury, "Impact of strategic deployment of CHP-based DERs on microgrid reliability," *IEEE Transactions on Power Delivery,* vol. 25, pp. 1697-1705, 2010.

[13] A. G. Abo-Khalil and D.-C. Lee, "MPPT control of wind generation systems based on estimated wind speed using SVR," *IEEE transactions on Industrial Electronics,* vol. 55, pp. 1489-1490, 2008.

[14] H. Jiayi, J. Chuanwen, and X. Rong, "A review on distributed energy resources and MicroGrid," *Renewable and Sustainable Energy Reviews,* vol. 12, pp. 2472-2483, 2008.

[15] D. Shchetinin and G. Hug, "Decomposed algorithm for risk-constrained AC OPF with corrective control by series FACTS devices," *Electric Power Systems Research,* vol. 141, pp. 344-353, 2016.

[16] F. H. Gandoman, A. Ahmadi, A. M. Sharaf, P. Siano, J. Pou, B. Hredzak*, et al.*, "Review of FACTS technologies and applications for power quality in smart grids with renewable energy systems," *Renewable and Sustainable Energy Reviews,* vol. 82, pp. 502-514, 2018.

[17] M. Kolcun, Z. Čonka, M. Kanálik, and D. Medveď, "Improvement of Transmission Capacity by FACTS devices in Central East Europe power system," *IFAC-PapersOnLine,* vol. 49, pp. 376-381, 2016.

[18] D. Thukaram and G. Yesuratnam, "Optimal reactive power dispatch in a large power system with AC-DC and FACTS controllers," *Generation, Transmission & Distribution, IET,* vol. 2, pp. 71-81, 2008.

[19] H. Abu-Rub, M. Malinowski, and K. Al-Haddad, *Power electronics for renewable energy systems, transportation and industrial applications*: John Wiley & Sons, 2014.

[20] J. Setreus and L. Bertling, "Introduction to HVDC technology for reliable electrical power systems," in *Probabilistic Methods Applied to Power Systems, 2008. PMAPS'08. Proceedings of the 10th International Conference on*, 2008, pp. 1-8.

[21] N. Flourentzou, V. G. Agelidis, and G. D. Demetriades, "VSC-based HVDC power transmission systems: An overview," *IEEE Transactions on power electronics,* vol. 24, pp. 592-602, 2009.

[22] S. M. Mohseni-Bonab, A. Rabiee, and B. Mohammadi-Ivatloo, "Voltage stability constrained multi-objective optimal reactive power dispatch under load and wind power uncertainties: A stochastic approach," *Renewable Energy,* vol. 85, pp. 598-609, 2016.

[23] D. Santos-Martin, S. Arnaltes, and J. R. Amenedo, "Reactive power capability of doubly fed asynchronous generators," *Electric Power Systems Research,* vol. 78, pp. 1837-1840, 2008.

[24] M. E. Montilla-DJesus, D. Santos-Martin, S. Arnaltes, and E. D. Castronuovo, "Optimal operation of offshore wind farms with line-commutated HVDC link connection," *Energy Conversion, IEEE Transactions on,* vol. 25, pp. 504-513, 2010.

[25] A. Rabiee and A. Soroudi, "Stochastic multiperiod OPF model of power systems with HVDC-connected intermittent wind power generation," *Power Delivery, IEEE Transactions on,* vol. 29, pp. 336-344, 2014.

[26] R. M. Strzelecki, *Power electronics in smart electrical energy networks*: Springer Science & Business Media, 2008.

[27] H. Zhao, Q. Wu, S. Hu, H. Xu, and C. N. Rasmussen, "Review of energy storage system for wind power integration support," *Applied Energy,* vol. 137, pp. 545-553, 2015.

[28] O. Palizban and K. Kauhaniemi, "Energy storage systems in modern grids—Matrix of technologies and applications," *Journal of Energy Storage,* vol. 6, pp. 248-259, 2016.

[29] A. G. Ter-Gazarian, *Energy storage for power systems*: Iet, 1994.

[30] M. R. Patel, *Wind and solar power systems: design, analysis, and operation*: CRC press, 2005.

[31] S.-C. Huang, K.-H. Tseng, J.-W. Liang, C.-L. Chang, and M. G. Pecht, "An Online SOC and SOH Estimation Model for Lithium-Ion Batteries," *Energies,* vol. 10, p. 512, 2017.

[32] V. Perelmuter, *Electrotechnical Systems: Simulation with Simulink® and SimPowerSystemsTM*: CRC Press, 2012.

[33] J. Mahseredjian, S. Dennetière, L. Dubé, B. Khodabakhchian, and L. Gérin-Lajoie, "On a new approach for the simulation of transients in power systems," *Electric power systems research,* vol. 77, pp. 1514-1520, 2007.

[34] M. O. Faruque, T. Strasser, G. Lauss, V. Jalili-Marandi, P. Forsyth, C. Dufour*, et al.*, "Real-time simulation technologies for power systems design, testing, and analysis," *IEEE Power and Energy Technology Systems Journal,* vol. 2, pp. 63-73, 2015.

[35] Y. Sekine, K. Takahashi, and T. Sakaguchi, "Real-time simulation of power system dynamics," *International Journal of Electrical Power & Energy Systems,* vol. 16, pp. 145-156, 1994.

[36] P. McLaren, R. Kuffel, R. Wierckx, J. Giesbrecht, and L. Arendt, "A real time digital simulator for testing relays," *IEEE Transactions on Power Delivery,* vol. 7, pp. 207-213, 1992.

[37] C. Dufour and J. Bélanger, "A PC-based real-time parallel simulator of electric systems and drives," in *Parallel Computing in Electrical Engineering, 2004. PARELEC 2004. International Conference on*, 2004, pp. 105-113.

[38] C. Larose, S. Guerette, F. Guay, A. Nolet, T. Yamamoto, H. Enomoto*, et al.*, "A fully digital real-time power system simulator based on PC-cluster," *Mathematics and computers in simulation,* vol. 63, pp. 151-159, 2003.

[39] G. SYBILLE, J.-C. SOUMAGNE, R. GAGNON, O. SAAD, P. GIROUX, J. LEMAY*, et al.*, "IREQ's innovations in power system simulation," *European journal of electrical engineering,* vol. 13, pp. 675-698, 2010.

[40] H. Nakra, R. L. Vaughan, C. Gagnon, A. Venne, C. Thomassin, and J. Gagnon, "Real-time simulator for power system dynamics studies," *IEEE Transactions on Power Systems,* vol. 10, pp. 1063-1070, 1995.

[41] D. Paré, G. Turmel, J. Soumagne, V. Do, S. Casoria, M. Bissonnette*, et al.*, "Validation tests of the hypersim digital real time simulator with a large AC-DC network," in *Proc. Int. Conf. Power System Transients*, 2003, pp. 577-582.