HAL
open science

Hybrid power generation system for aircraft electrical emergency network

Xavier Roboam, Olivier Langlois, Hubert Piquet, Benoît Morin, Christophe Turpin

To cite this version:

Xavier Roboam, Olivier Langlois, Hubert Piquet, Benoît Morin, Christophe Turpin. Hybrid power generation system for aircraft electrical emergency network. IET Electrical Systems in Transportation, 2011, vol. 1 (n° 4), pp. 148-155. 10.1049/iet-est.2010.0045 . hal-01722852

HAL Id: hal-01722852

https://hal.science/hal-01722852v1

Submitted on 5 Mar 2018

HAL is a multi-disciplinary open access archive for the deposit and dissemination of scientific research documents, whether they are published or not. The documents may come from teaching and research institutions in France or abroad, or from public or private research centers.

L'archive ouverte pluridisciplinaire **HAL**, est destinée au dépôt et à la diffusion de documents scientifiques de niveau recherche, publiés ou non, émanant des établissements d'enseignement et de recherche français ou étrangers, des laboratoires publics ou privés.

Open Archive TOULOUSE Archive Ouverte (OATAO)
OATAO is an open access repository that collects the work of Toulouse researchers and makes it freely available over the web where possible.

This is an author-deposited version published in : http://oatao.univ-toulouse.fr/
Eprints ID : 19619

To link to this article : DOI:10.1049/iet-est.2010.0045
URL : http://dx.doi.org/10.1049/iet-est.2010.0045

To cite this version : Roboam, Xavier and Langlois, Olivier and Piquet, Hubert and Morin, Benoît and Turpin, Christophe *Hybrid power generation system for aircraft electrical emergency network.* (2011) IET Electrical Systems in Transportation, vol. 1 (n° 4). pp. 148-155. ISSN 2042-9738

Any correspondence concerning this service should be sent to the repository administrator: staff-oatao@listes-diff.inp-toulouse.fr

Hybrid power generation system for aircraft electrical emergency network

X. Roboam[1] O. Langlois[2] H. Piquet[1] B. Morin[1] C. Turpin[1]

[1]LAPLACE, Université de Toulouse, UMR CNRS-INPT-UPS, site ENSEEIHT, 2 rue Camichel, BP7122, 31071 Toulouse, Cedex 7, France
[2]Airbus operation SAS, 316 route de Bayonne, 31060 Toulouse, Cedex 9, France
E-mail: morin@laplace.univ-tlse.fr

Abstract: A whole structure and two management strategies are proposed here for hybridisation of a Ram air turbine (RAT) by means of supercapacitors. Such hybrid structure is dedicated to an aircraft emergency network. The structure consists in coupling, through a 270 V DC bus, a controlled source (RAT) with a storage device interfaced through a bidirectional DC–DC converter. Both the energy-management strategies are described and analysed: the first one is to assign the 'high-frequency harmonics' of the load power to the storage which is current controlled, whereas the RAT controls the bus voltage and then only feeds the average power, losses and low-frequency harmonics of the load. The second one proposes an energy optimised operation of the system: the RAT, being current controlled, is able to maximise the supplied power (maximum power point tracking), as for classical wind turbines. For such a strategy, the bus voltage is regulated from the storage device. The RAT sizing and its mass can then be strongly reduced by means of this hybrid structure controlled with optimised management strategies. Experiments on a lab test-bench confirm analyses presented.

1 Introduction

The 'more electric aircraft' involves a lot of changes to electrical networks and embedded powers [1]: a large EU project has recently demonstrated the advantages in terms of flexibility and energy optimisation [2]. Several subsystems become 'more electrical' such as for flight control [3, 4] and pumps. Other functions will also be electrically powered in the future, such as braking, air conditioning [5], anti-ice systems or starters/generators [1, 6]. This paper focuses especially on the emergency sub-network: a full electrical power is used in modern aircrafts for emergency situations as on the A380 [7, 8]. Aerospace requirements for such an application lead to fulfilling the emergency flight mission with a minimised embedded weight. During this operation, energy generation is often ensured by a high speed wind turbine (Ram air turbine – RAT) that unfolds in case of engine failure. This turbine is currently sized to provide the maximum power that the aircraft may require during its emergency mission. In such a case, the main power demand is due to flight control actuators and is strongly intermittent.

The main issue of this paper is then to propose a hybrid structure of the emergency network coupling the RAT with a storage device: this issue has been studied in the PhD thesis of Langlois [8]. Many papers deal with hybrid systems in aircrafts [9] or for other applications [10–13]. Several source technologies (i.e. fuel cells, turbines, etc.) can be coupled with storage technologies (batteries or supercapacitors (SCs)) to increase system performance, decrease the sizing of the main source (weight, volume) or increase life duration.

In this paper, the authors mainly focus on energy-management strategies for a RAT - SC hybrid emergency network for aircraft application. After synthesising the requirements and context of this study, two management strategies are proposed and analysed by simulations. This analysis shows this controlled system's capability to be reduced in terms of size and mass, compared with the actual uncontrolled system. The analysis is confirmed by the experiments based on a reduced power test-bench.

2 Emergency network description and requirements

A full electrical emergency network is considered here. In the case of an electrical power fault possibly due to a total engine failure, essential loads have to be powered. Three classes of essential loads are fed: there are avionic loads on a low voltage 28 V DC bus, and some essential loads are fed on a 'high voltage bus' (here 115 V AC), for example, for essential lightning. But the main part of the power needs is due to flight control actuators. The first two groups of loads can be considered as nearly constant as the third one is strongly intermittent (see Fig. 1). An example of an emergency subsystem is highlighted in Fig. 1. During this emergency operation, energy generation is often ensured by a high speed wind turbine (i.e. the RAT) that unfolds in case of engine failure. This turbine is currently sized to

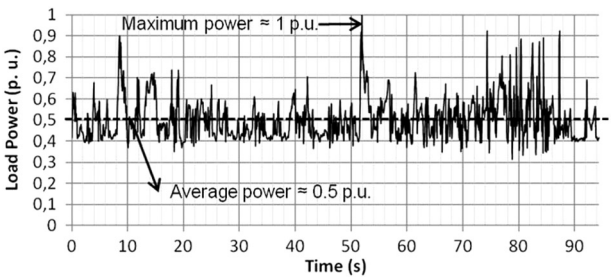

Fig. 1 *Typical sizing flight cycle for electrical emergency*

provide the maximum power that the aircraft may require during its emergency mission. In such a case, the main power demand is due to flight control actuators: the motion of flight control surfaces is carried out by electro-hydraulic actuators or electro-mechanical actuators [3, 4], which need high power during short time intervals. This results in a highly intermittent profile where the peak power is about twice as high as the average power [8]. This power cycle is given for the most compelling case, when the aircraft is approaching the landing phase at low altitude: RAT power is at minimum due to low aircraft speed while many flight control actuators are operated simultaneously due to turbulent conditions. Instead of the 'AC ESS BUS' equivalent to an AC bus which appears on Fig. 2, a high voltage 270 V DC bus is considered. This study is focused on the hybridisation of this DC bus. Concerning voltages and currents associated with the AC loads, equivalent DC quantities are introduced and used for analyses.

3 Energy-management strategies for multi-sources device

Many studies dedicated to embedded systems have demonstrated that a significant reduction in weight and volume of the whole system can be obtained by hybridising the main source with storage devices. Several storage component technologies may be used for that purpose. The energy against power Ragone plot [14] is usually used to select a technology with respect to the mission requirements: batteries are preferred if energy needs are important, while SC constitute the best choice if the power need is of prime importance with short durations of power peaks. Many papers have focused on power-sharing optimisation by means of batteries or SC [11–13]. In our case study, with regard to the considered load profile (see Fig. 1), the best weight–power ratio and safe operation for storage appliances are given for SC. A complete study on that topic has been made in [8]. The general issue of hybridisation consists in providing the average power and losses from the main power supply (i.e. the RAT), while transients are covered by the storage (i.e. SC): this operation is called 'power-sharing' [13]. Q1

Considering that sources and loads of the hybrid system are coupled through a 270 V DC bus, as illustrated in Fig. 5, we have chosen a serial connection of SC (BPAK0058E15: 15 V, 58 F Maxwell modules) [15] to obtain a maximum voltage value of 250 V. Classically, SC are discharged by 50%, that is a minimum voltage of 125 V, thus providing 75% of the maximum stored energy. A power reversible DC–DC chopper is then chosen to connect the SC with the 270 V DC bus. Q2

The process for storage sizing based on the Ragone plot analysis is illustrated in Fig. 3. A correct storage sizing allows to fulfil the power–energy needs when the 'mission' cycle is kept inside the cycle involved by the SC battery, taking into account voltage ('SC V bounds') and current ('SC I bounds') limits.

System simulations have been performed for the complete structure using the SABER software. As mentioned in Section 2, the RAT–generator–rectifier set, as seen from the 'point of regulation' (on which the loads will be connected) is modelled through a DC equivalent model detailed in [8]. The equivalent model structure is illustrated for the generator–rectifier in Figs. 4 and 5: E_{DC} is the rectified RAT voltage; it takes into account the voltage drop due to diode overlaps.

A bond graph approach has been considered for modelling, as proposed in [3]. The load power presented

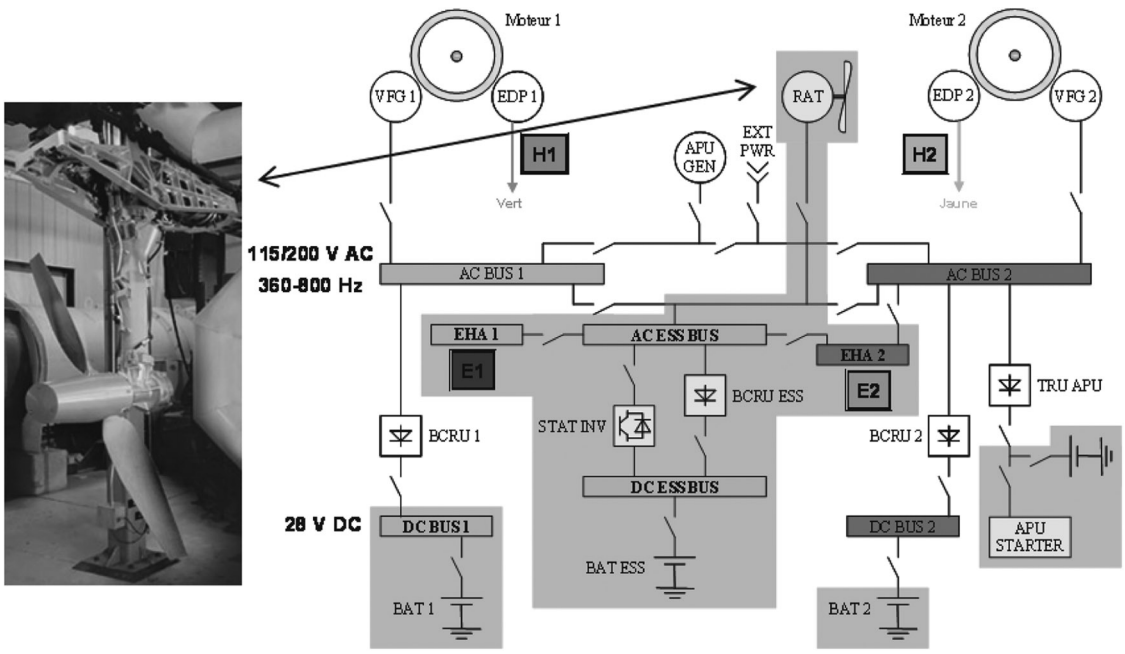

Fig. 2 *More electrical aircraft bi-motor architecture (emergency sub-network is highlighted)*

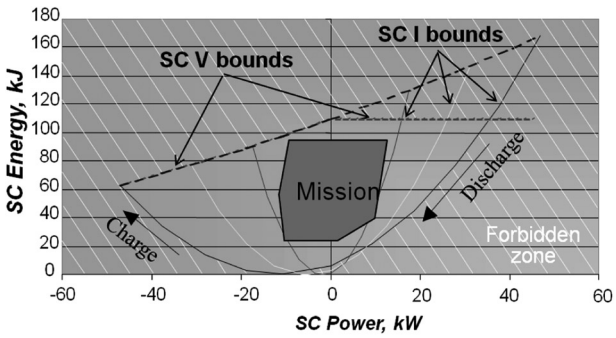

Fig. 3 *Three different SC sizing from Ragone plot analysis*

in Fig. 1 merges currents due to constant loads (for avionic and constant essential loads) and due to intermittent loads, for instance, the flight control actuators achieving the mission cycle.

Two different strategies are described in the next subsections to interface the RAT and the storage device. 'Sizing models' for the RAT turbine and its generator as well as for the DC-DC chopper have been developed in [8]: these models are used to resize these devices according to the selected power ratings. Volume and weight are two of the outputs of the sizing models. The task is easy for the storage devices, which are naturally modular: the characteristics of the whole device are derived from both mass and volume of one of the associated SC element.

3.1 Conventional strategy

The RAT is the main energy source [8]: it is composed of two-blade wind turbine. The pitch angle of the blades ϑ is adjusted by an autonomous passive mechanical system for blades stalling. The turbine is coupled to a synchronous generator (SG) through a speed multiplier. For a 270 V DC sub-network, a diode bridge is connected between the generator and the DC bus capacitance to rectify the voltage. The voltage delivered by the RAT is controlled by means of the excitation voltage V_{ex}, which adjusts the field current. This latter defines the no-load voltage of the DC bus proportionally. So, a first 'classical' idea should be to control the current of the storage device to provide the high-frequency harmonics of the load, as illustrated in Fig. 5: a high-pass filtering is set on the measured load current I_{loads} to provide the value of the high-frequencies current (I_{loads}^{HF}) that will be requested from the storage device ($I_{stor}^{ref} = I_{loads}^{HF}$). Thus, the RAT has to provide only the low-frequency harmonics, especially the average power and system losses. Remembering that 50% of the load power is intermittent, one can easily conclude that such a strategy will lead to a significant RAT sizing reduction.

The current reference that has to be provided or accepted by the storage device I_{stor} is in fact controlled on the low voltage side of the bidirectional DC–DC chopper (I_{SC}): the SC reference current $I_{ideal\ SC}^{ref}$ is obtained applying a gain which results due to power balance. Consequently, the SC current controller computes the duty cycle (α) which drives the DC-DC chopper. To complete the description of this first

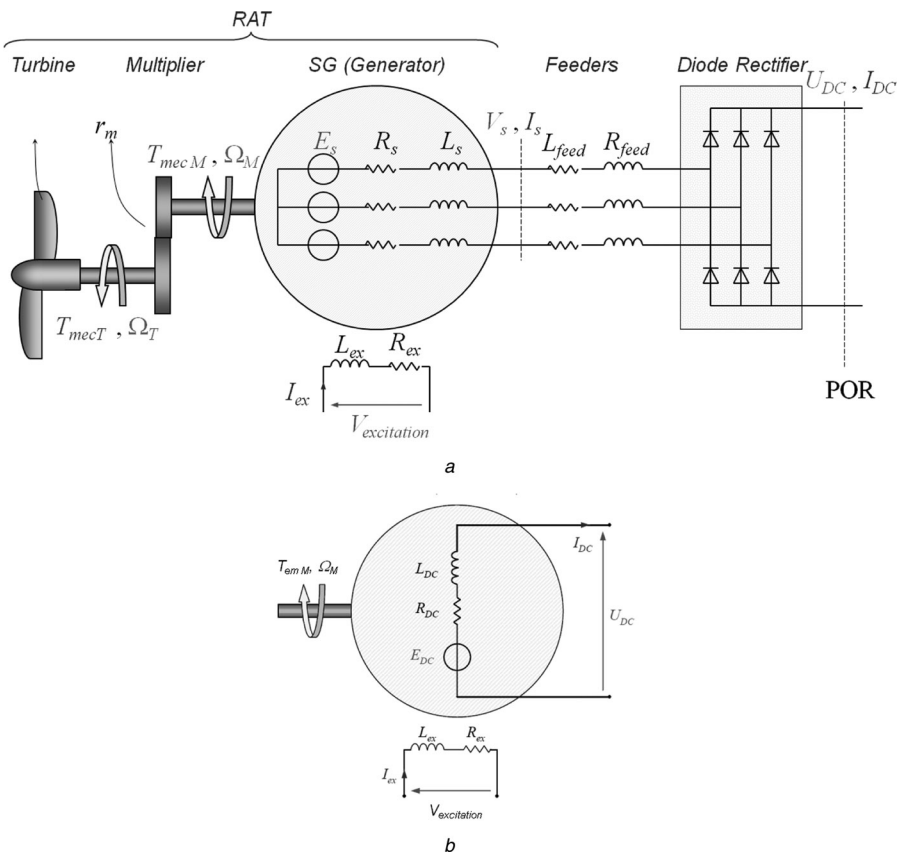

Fig. 4 *Electrical scheme and its equivalent DC circuit*

a Whole system structure
b DC equivalent generator

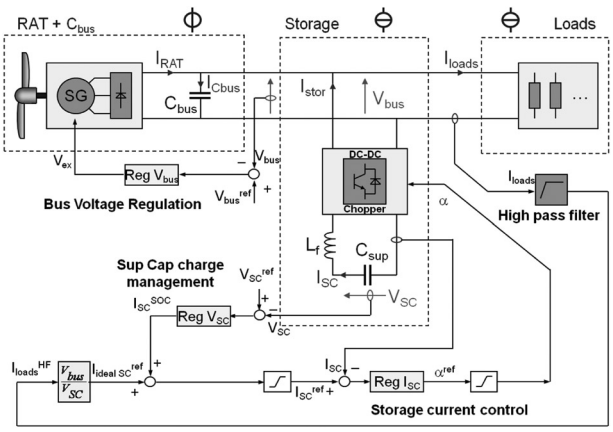

Fig. 5 *'Classical' structure for RAT – SC hybridisation*

management strategy, the state of charge (SOC) of the SC battery is ensured, thanks to a slow dynamic control loop that regulates the SC voltage (V_{SC}^{ref}) and compensates the losses of the DC–DC chopper. The reference for the corresponding additional current (I_{SC}^{SOC}) is then added to the $I_{ideal\ SC}^{ref}$ reference of the storage control loop.

On the one hand, the control of the SC voltage needs to ensure a convenient SOC in case of high power demand. On the other hand, this control loop has to be slow enough to allow SC voltage variations in order to allow the SC to provide power over the desired frequency range. This loop is also useful to compensate losses in the SC device (SC and DC–DC chopper) over a long operation time.

It should be noted that every controller ('Reg X') of Fig. 5 correspond with a proportional–integral (PI) structure.

Fig. 6 illustrates the operation of the hybrid network with this 'classical' strategy. As planned in the management strategy, the RAT power (P_{RAT}) is significantly reduced with respect to the full power of loads (P_{loads}). Only the SC device is charged and discharged with the high-frequency components: in this simulation case, the filtering frequency has been set to 10 mHz, leading to a correct power-sharing close to 50%. We have also verified that the voltage of the SC, and then its SOC, is correctly maintained along the whole cycle.

However, a sharp analysis of the controlled system shows that the RAT does not provide its maximum power with respect to the flight conditions (relative speed of the aircraft against wind): the operation of the wind turbine is not completely optimised. For that purpose, another strategy is presented in the next subsection.

3.2 'Dual-optimised' strategy with maximum power point tracking (MPPT)

This new strategy proposes to exchange the nature of both associated sources. Indeed, the architecture is the same as the previous one, but the sources control is dual: the main source, the RAT, is now current controlled, whereas the SC device together with its bidirectional chopper regulates the bus voltage.

This inversion has two advantages:

- It increases the dynamic of the bus voltage loop, thus enhancing the voltage waveform quality, thanks to the high dynamics of the storage subsystem with regard to the RAT subsystem.
- It benefits from a new degree of freedom in the RAT subsystem: the excitation field of the generator controls the power delivered by the RAT.

This last issue is of prime importance, as the RAT can provide a maximum power along the emergency cycle. As for classical wind turbine systems, an MPPT strategy can be set following the load power and the SC SOC [16]. However, an issue is to be able to leave the MPPT mode and to 'decrease' the RAT power operation when neither the load nor the SOC of the storage device require maximising the power:

- A 'normal' mode is simply defined: the RAT provides the full power required by the load. During this mode, the SOC of the SC device remains nearly constant.
- The 'MPPT' mode is only activated if the load power demand becomes higher than the RAT maximum power, or if the SC voltage is below a voltage bound (V_{SC}^{min}). Otherwise in this mode, the storage device naturally provides the rest of the demanded power by regulating the bus voltage. Note that MPPT operation is maintained until the SC voltage is re-established (V_{SC}^{max}).

The synoptic of Fig. 7 describes the control strategy. The same functions as for Fig. 5 are displayed, but here the SC voltage is now controlled inside the MPPT block. The storage subsystem is only in charge of bus regulation. Furthermore, the excitation voltage ($V_{excitation}$) of the generator is now given by the output of the RAT current controller.

The operation of the RAT against speed, especially at maximum power (MPPT mode), is slightly complex due to variations in the blade's tip angle. To summarise this issue (see Fig. 8*b*), note that the tip angle ϑ is directly linked with the rotation speed of the wind turbine Ω_T. When

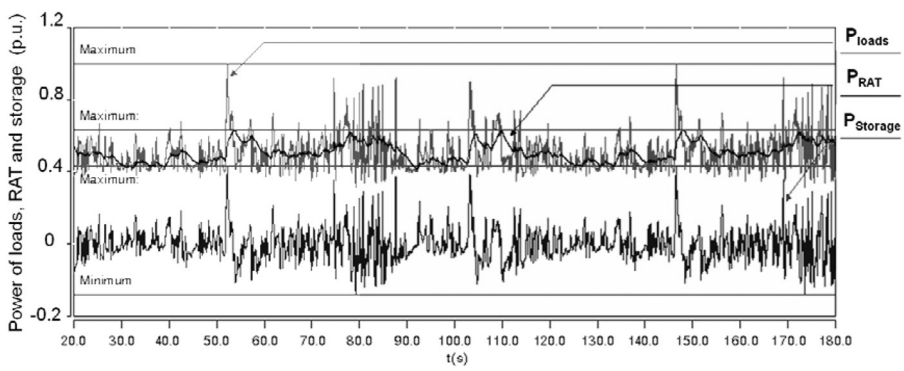

Fig. 6 *Behaviour of the classical management strategy*

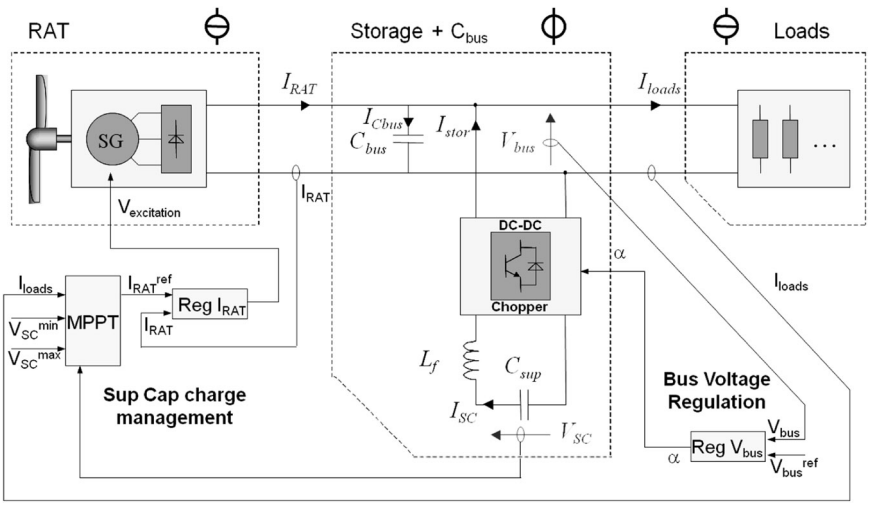

Fig. 7 *'Dual' optimised management strategy with MPPT*

mechanical constraints are smooth (low aircraft speed and/or low-speed operation), a constant tip angle ($\vartheta = \vartheta_b$) is kept at low speeds ($\Omega_T < \Omega_{Tb}$). Oppositely, when the rotation speed increases (higher constraints: $\Omega_T > \Omega_{Tb}$), the tip angle ϑ becomes variable to stall the blades and to limit mechanical constraints: $\vartheta > \vartheta_b$ when $\Omega_T > \Omega_{Tb}$.

The MPPT mode is ensured, as illustrated in Fig. 7*b*, by following the dashed characteristic: note that power

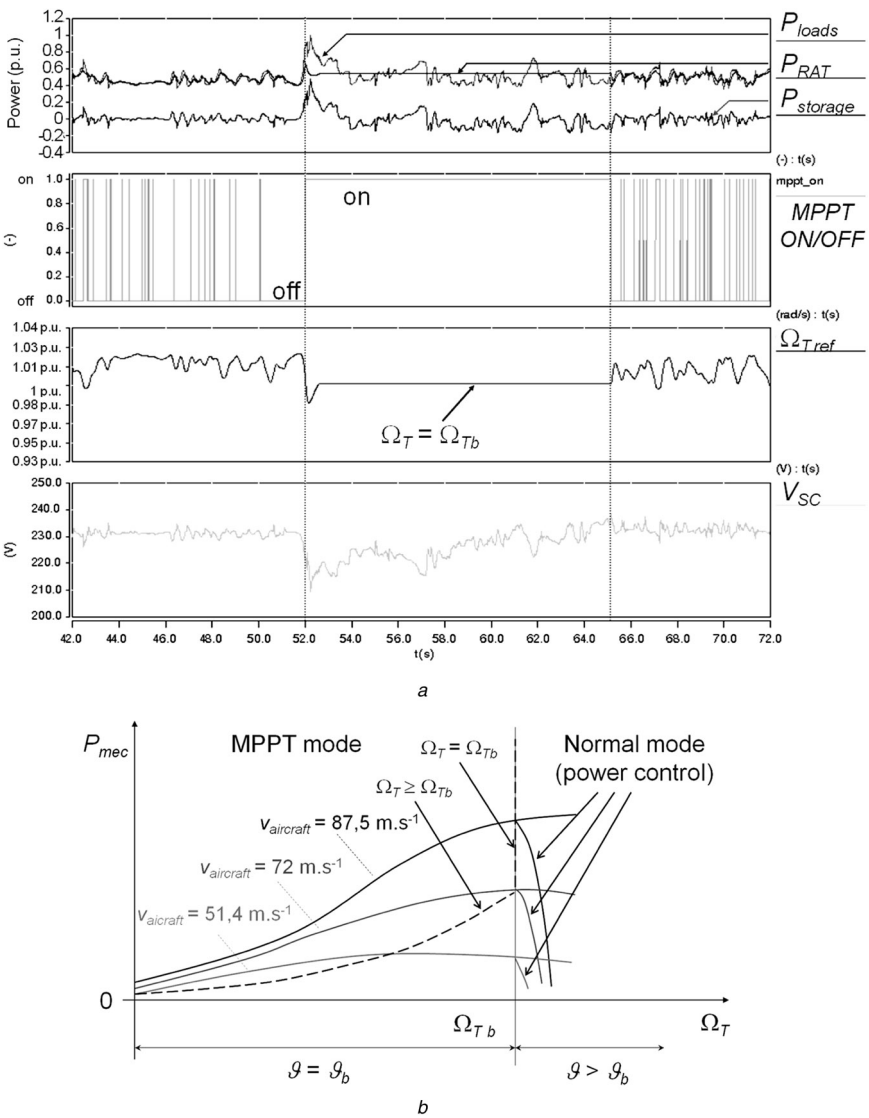

Fig. 8 *Behaviour of the 'dual' optimised management strategy with MPPT*

a Chronogram of powers, mode, turbine rotation speed and SC voltage
b Power–speed characteristics against turbine rotation speed

optimisation leads to fixing the speed $\Omega_T = \Omega_{Tb}$ for the highest aircraft speeds (i.e. $V_{aircraft} > 72\ ms^{-1}$).

The normal mode (see the right part of Fig. 8*b*), in which the power is controlled but not maximised, is obtained by increasing the turbine speed ($\Omega_T > \Omega_{Tb}$), which provokes blades stalling. The simulation results of Fig. 8*a* put forward the management strategy with switching between MPPT and normal modes. This strategy allows the maximum power offered by the turbine to be obtained with respect to the environmental conditions (altitude, aircraft speed). High variations in loads are also acceptable contrarily to the previous strategy, for which the RAT only provides low-frequency harmonic components.

From the previous study and analysis, the RAT and its generator have been resized to adjust the specific power to the power demand (cf. Fig. 1). With reference to the actual system sizing (i.e. RAT alone without storage), the characteristics of a new source (geometry of RAT and generator) have been defined. This resizing process uses similitude relationships as presented in [17] for synchronous machines synthesis models.

Finally, an estimation of the benefit concerning the mass of the whole system is achieved from the sizing models. For power electronic as for electromechanical and electrochemical (SC) devices, an 'installation coefficient' has been considered to take into account all auxiliary components (packaging) needed to install devices on board and to fulfil the environmental constraints (e.g. cooling, vibrations).

Thanks to the hybridisation, the RAT power can be decreased with a 50% reduction rate. The inversion of source natures using the 'dual-optimised strategy with MPPT' leads to a more important reduction with a supplementary underrating of 20%.

Finally, this optimisation offers a 30% reduction in RAT size (RAT diameter), which is particularly interesting concerning the embedded integration. Consequently, the mass reduction has been estimated at 25% ('around one passenger gained') for the whole system.

4 Experiments on the reduced power hybrid network

For the experimental validation of hybridisation, a reduced power test-bench has been built in the LAPLACE laboratory [18] (cf. Fig. 9). It reproduces a high voltage DC (HVDC) electrical network. Programmable DC sources and loads with a maximum current of 50 A have been used: these devices allow the RAT source and the load along the flight cycle to be emulated. Hybridisation is possible by including a static converter on an electrical power centre (EPC), which interfaces low voltage storage (here the SC) with the HVDC bus (here 270 V). The whole system is managed by a supervisor based on the dSPACE modular hardware. Power converters used in the experiments allow tests to be run at 10 kW peak power, which gives a 1/5 scale factor, when compared to the actual emergency network.

The mission profile corresponding to actual loads (flight control actuators and others) as illustrated in Fig. 1 is emulated by means of the programmable load: a power scale factor of 1/5 has been added to fulfil the power range of the test-bench.

As the LAPLACE lab is not equipped with an actual RAT, it has to be emulated. The issue is to reproduce the transient behaviour of the RAT device: in our case, a programmable (controllable voltage and/or current) DC source is used. The aircraft speed being assumed constant during the mission cycle of Fig. 1, the model is simplified, as no mechanical dynamics are considered. The already described (see Fig. 4) equivalent DC structure [8] is considered for the emulator: both excitation and stator branches are first-order *R,L* circuits. Assuming an operation at a constant speed, the relationship between the excitation current and the electromotive force is approximated to be linear. Therefore the whole system is considered as two first-order delays with their respective time constants, as presented in Fig. 10. To control the RAT current or the DC bus voltage, a typical cascaded structure of PI controllers is used. The whole structure is implemented in the supervisor system, which calculates the instantaneous value of RAT current or voltage. It is then sent to the programmable DC source to emulate the RAT transient behaviour.

The Maxwell BPAK0058 E015 SC modules ($C = 58$ F, Un = 15 V) selected in the previous part are installed for experiments. A single branch of nine series-connected SC is used to fulfil the reduced power requirements ($C_s = 6.44$ F, $U_n = 135$ V). To interface the 270 V DC bus with various low voltage (i.e. SC) or very low voltage storage devices (i.e. accumulators), a specific bidirectional topology of static converter has been developed by LAPLACE and CIRTEM [18].

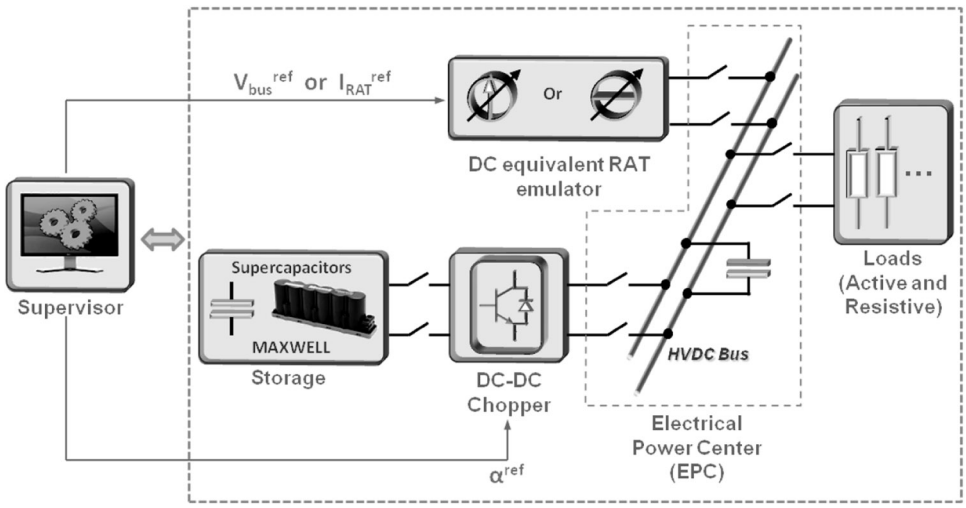

Fig. 9 *Synoptic of the experimental test-bench*

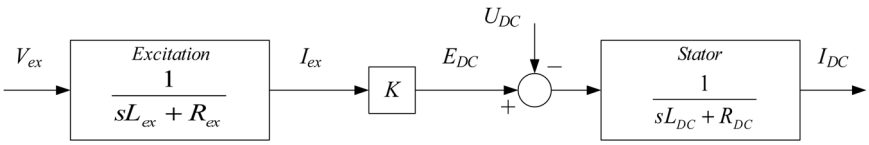

Fig. 10 *Dynamic model of RAT used for emulation*

In the figures below, experimental results obtained on the lab test-bench are presented, with the system being configured as follows:

- nine super capacitors are connected in series;
- HVDC bus voltage is controlled to 270 V;
- a DC programmable source emulates RAT dynamics;
- the cut-off frequency of power-sharing filter is set at 10 mHz;
- the load profile has 5 kW average power and 10 kW peak power (1/5 ratio against actual profile).

The captured waveforms present 270 V DC bus and capacitor bank voltages with RAT, storage and load currents for the two strategies.

Figs. 11 and 12 display results concerning, respectively, the 'classical' and the 'dual' strategies. The whole mission cycle and a zoom on the peak power demand are presented. The

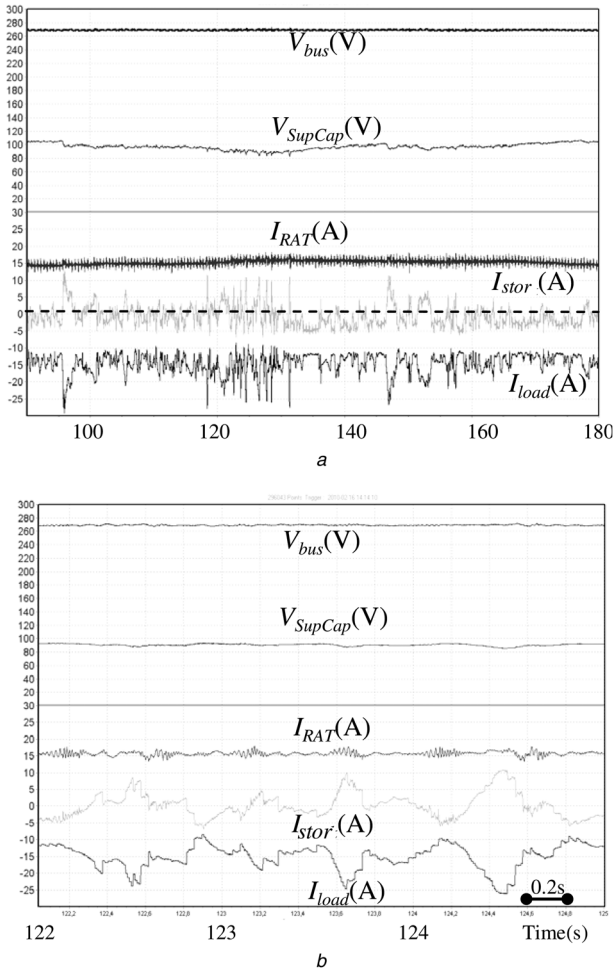

Fig. 11 *'Classical' hybridisation with RAT emulation (RAT in voltage mode, storage in current mode)*

a Hybridisation on 90 s (one full load profile)
b Zoom on peak power

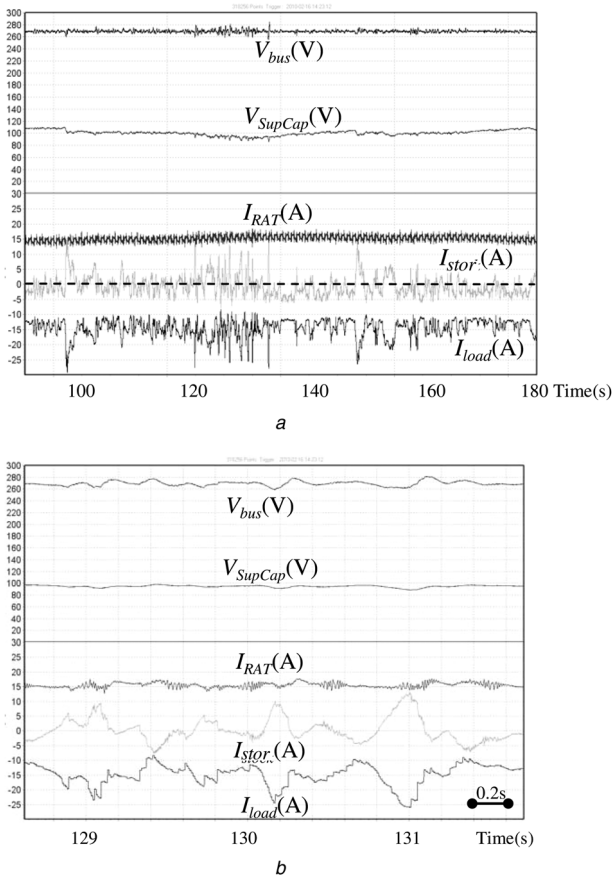

Fig. 12 *'Dual' hybridisation with RAT emulation (RAT in current mode, storage in voltage mode)*

a Hybridisation on 90 s (one full load profile)
b Zoom on peak power

filtering effect on the RAT current can be observed in both cases and this proves the capability of the hybridisation to reduce the RAT sizing. Indeed, as the maximum load current is 25 A, the one provided by the RAT is only 15 A (i.e. ~60%). Based on these experiments for which the MPPT operation of RAT has not been considered (as the actual RAT is unavailable), the reduction effect appears to be the same for both strategies, even if the 'dual' one has been shown in the previous part to be optimised in terms of size reduction (weight reduction) capability.

The zoom presented in Figs. 11 and 12 shows that all dynamics of sources are conveniently controlled, especially the SC SOC, which is kept around its nominal operation all along the mission profile.

5 Conclusion

In this paper, two hybridisation strategies have been studied and analysed by simulation and then tested on an experimental test-bench. The hybrid structure connects together a RAT device with a storage subsystem equipped

with an interfacing converter connected to a SC bank. The DC–DC converter structure allows an HVDC (270 V) bus to be interfaced with variable storage voltages (SC) with convenient energy efficiency. The obtained experimental results confirm the conclusions of the theoretical study: such an hybridised structure associating the RAT with SCs allows to significantly reduce the system weight: the mass reduction has been estimated as 25%. The dynamic behaviours of both strategies ('classical' and 'dual') are nearly equivalent, even if the dual one allows a faster bus regulation and maintains the system's stability during transient operation. The experiments have especially confirmed that the proposed control and management realise efficient RAT current filtering and SCs SOC control.

6 Acknowledgment

Experiments presented in this paper have been conducted, thanks to the support of the French national project Innovative Solutions for Systems (ISS) Power supported by Direction Générale de l'Armement (DGA).

7 References

1 Rosero, J.A., Ortega, J.A., Aldabas, E., Romeral, L.: 'Moving towards a more electric aircraft', *IEEE Aerosp. Electron. Syst. Mag.*, 2007, **22**, (3), pp. 3–9
2 MOET (More Opened Electrical Technologies): 'Final technical report', EU FP6 project, http://www.eurtd.com/moet/, December 2009
3 Langlois, O., Roboam, X., Maré, J-C., Piquet, H., Gandanegara, G.: 'Bond graph modelling of an electro-hydrostatic actuator for aeronautic applications' (IMACS, Paris, France, 2005)
4 Van Den Bossche, D.: 'More electric control surface actuation – a standard for the next generation of transport aircraft'. Tenth European Power Electronics and Applications Conf., Toulouse, France, 2003
5 Ensign, Th.R.: 'Performance and weight impact of electric environmental control system and more electric engine on citation CJ2'. 45th AIAA (Aerospace Sciences Meeting and Exhibit), Reno, Nevada, January 2007, pp. 8–11
6 Raimondi, G.M., Sawata, T., Holme, M., *et al.*: 'Aircraft embedded generation systems'. IET PEMD Conf., Dublin, No. 487, 2002, pp. 217–222
7 Koerner, M.: 'Recent developments in aircraft emergency power'. IEEE Conf., IECEC, Las Vegas, NV, 2000, vol. 1, pp. 12–19
8 Langlois, O.: 'Conception d'un réseau de secours électrique pour l'aéronautique'. PhD thesis of Université de Toulouse, INPT/LAPLACE, France, June 2006, http://ethesis.inp-toulouse.fr/archive/00000243/
9 Bataller-planes, E., Lapenza-Rey, N., Mosquera, J., *et al.*: 'Power balance of a hybrid power source in a power plant for a small propulsion aircraft', *IEEE Trans. Power Electron.*, 2009, **24**, (11–12), pp. 2856–2866
10 'Design and implementation of a DSP-based fuel cell-battery hybrid power source'. IET PEMD Conf., 2004 **Q3**
11 Ayad, M.Y., Becherif, M., Djerdir, A., Miraoui, A.: 'Sliding mode control for energy management of DC hybrid power sources using fuel cell, batteries and supercapacitors'. IEEE Conf., ICCEP, Capri, 2007
12 Awerbuch, J.J., Sullivan, C.R.: 'Control of ultracapacitor-battery hybrid power source for vehicular applications'. IEEE Conf., Energy, Atlanta, GA, 2008
13 Gao, L., Dougal, R.A., Liu, S.: 'Active power sharing in hybrid battery-capacitor power sources'. IEEE Conf., APEC, 2003
14 Christen, T., Carlen, M.W.: 'Theory of Ragone plots', *J. Power Sources*, 2000, **91**, (2000), pp. 210–216
15 Maxwell technologies and products: http://www.maxwell.com/ultracapacitors/products/
16 Siegfried, H.: 'Grid integration of wind energy conversion systems' (Wiley, 1998)
17 Fefermann, Y., Randi, S.A., Astier, S., Roboam, X.: 'Synthesis models of PM brushless motors for the design of complex and heterogeneous system'. EPE'01, Graz, Austria, September 2001
18 Rafal, K., Morin, B., Roboam, X., Bru, É., Turpin, C., Piquet, H.: 'Experimental validation of hybrid emergency electrical network for aircraft application'. IEEE VPPC Conf., Lille, France, September 2010